MONTAGEANLEITUNG

Artikelnummer: N616P528691/ N616P528692/N616P528693

Dieses Set ist in 3 Boxen enthalten. Wenn Sie keine vollen 3 Boxen erhalten, wenden Sie sich bitte an unseren Kundenservice

Bett 140x190cm

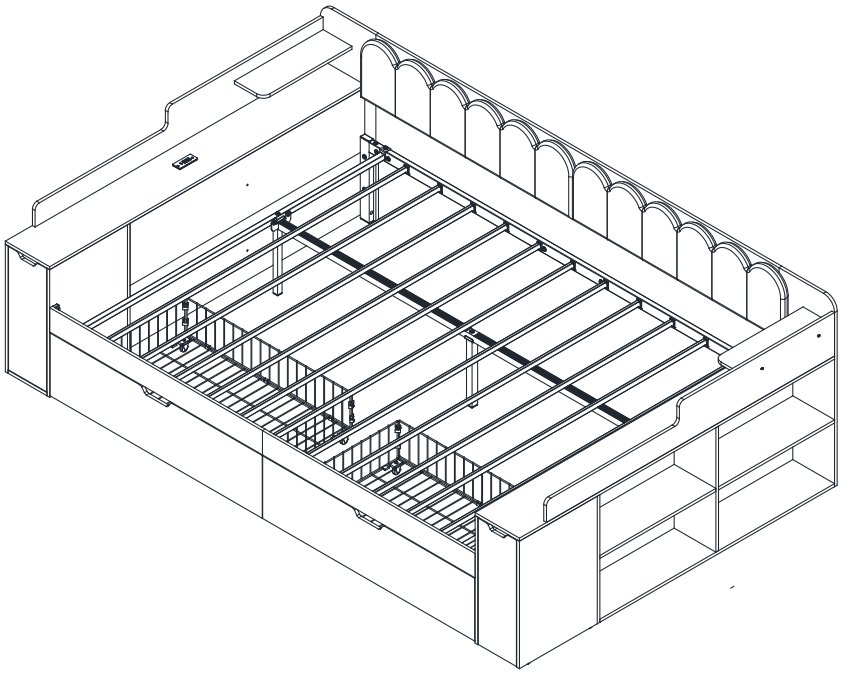



- D Gebrauchsanweisung
- NL Gebruiksrichtlijnen
- IT Istruzioni per l'uso
- CZ Pokyny k použití
- HU Használati útmutató
- PT Instruções de utilização
- SK Pokyny k použitiu
- GB Instructions for use
- FR Instructions d'utilisation
- PL Instrukcja obsługi
- ES Instrucciones de empleo
- RO Instructiuni de folosire
- RU Инструкция по монтажу
- TR Kullanim talimatlari

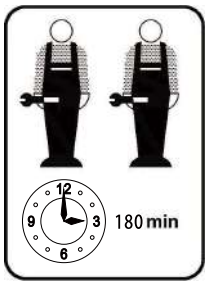

English

IMPORTANT ! KEEP FOR FUTURE REFERENCE : READ CAREFULLY

- To be assembled by an adult. Assembly must be checked by an adult before use
- WARNING ! Keep all screws, small parts and plastic bags out of the reach of children
- Properly identify all parts before assembling
- Never use your item if any of its parts are broken or missing
- Should any problems arise, please contact our After Sales Service
- Manufacturer's instructions shall be followed at all times
- Care: Clean with a soft, dry cloth. In case of larger stains, carefully rub with a slightly damp, non-abrasive sponge
- Avoid the risk of fire by not placing furniture near sources of ignition or hot items
- Do not jump on the bed

Deutsch

WICHTIG ! ZUM SPÄTEREN NACHSCHLAGEN AUFBEWAHREN: SORGFÄLTIG LESEN

- Muss von einem Erwachsenen zusammengebaut werden.Der Zusammenbau muss vor dem Gebrauch von einem Erwachsenen überprüft werden
- WARNUNG! Bewahren Sie alle Schrauben, Kleinteile und Plastikbeutel außerhalb der Reichweite von Kindern auf
- Kennzeichnen Sie vor dem Zusammenbau alle Teile richtig
- Benutzen Sie Ihren Artikel niemals, wenn Teile gebrochen sind oder fehlen
- Sollten Probleme auftreten, wenden Sie sich bitte an unseren Kundendienst
- Die Anweisungen des Herstellers sind stets zu befolgen
- Pflege: Mit einem weichen, trockenen Tuch reinigen. Bei größeren Flecken vorsichtig mit einem leicht feuchten, nicht scheuernden Schwamm abreiben. nicht scheuernden Schwamm
- Vermeiden Sie die Gefahr eines Brandes, indem Sie die Möbel nicht in der Nähe von Zündquellen oder heißen Gegenständen aufstellen
- Nicht auf das Bett springen

Français

IMPORTANT ! CONSERVER POUR RÉFÉRENCE ULTÉRIEURE : LIRE ATTENTIVEMENT

- Le montage doit être effectué par un adulte. Le montage doit être vérifié par un adulte avant Utilisation
- ATTENTION ! Tenir les vis, les petites pièces et les sachets en plastique hors de portée des enfants
- Identifiez correctement toutes les pièces avant de les assembler
- N'utilisez jamais votre article si l'une de ses pièces est cassée ou manquante
- En cas de problème, veuillez contacter notre service après-vente
- Les instructions du fabricant doivent être respectées à tout moment
- Entretien : nettoyer avec un chiffon doux et sec. En cas de taches plus importantes, frotter soigneusement avec une éponge non abrasive légèrement humide. légèrement humide et non Abrasive
- Évitez les risques d'incendie en ne plaçant pas les meubles à proximité de sources d'inflammation ou d'objets chauds
- Ne pas sauter sur le lit

Italiano

IMPORTANTE! CONSERVARE PER RIFERIMENTO FUTURO: LEGGERE ATTENTAMENTE

- Deve essere assemblato da un adulto. L'assemblaggio deve essere controllato da un adulto prima dell'uso
- ATTENZIONE! Tenere tutte le viti, le piccole parti e i sacchetti di plastica fuori dalla portata dei bambini
- Identificare correttamente tutte le parti prima dell'assemblaggio
- Non utilizzare mai l'articolo se alcune parti sono rotte o mancanti
- In caso di problemi, si prega di contattare il nostro Servizio Post Vendita
- Le istruzioni del produttore devono essere sempre seguite
- Cura: Pulire con un panno morbido e asciutto. In caso di macchie più estese, strofinare accuratamente con una spugna leggermente umida e nonspugna leggermente umida e non abrasiva
- Evitare il rischio di incendio, non collocando i mobili vicino a fonti di accensione o a oggetti caldi
- Non saltare sul letto

Español

¡ IMPORTANTE ! CONSÉRVELO PARA FUTURAS CONSULTAS: LEA ATENTAMENTE

- Debe ser montado por un adulto. El montaje debe ser comprobado por un adulto antes del uso

ADVERTENCIA Mantenga todos los tornillos, piezas pequeñas y bolsas de plástico fuera del alcance de los niños.

- Identifique correctamente todas las piezas antes de montarlas
- Nunca utilice su artículo si alguna de sus piezas está rota o falta
- Si surge algún problema, póngase en contacto con nuestro Servicio Postventa
- Las instrucciones del fabricante deben seguirse en todo momento
- Cuidado: Limpiar con un paño suave y seco. En caso de manchas más grandes, frote cuidadosamente con una esponja no abrasiva ligeramente humedecida.
- Evite el riesgo de incendio no colocando los muebles cerca de fuentes de ignición u objetos calientes.
- No saltar sobre la cama.

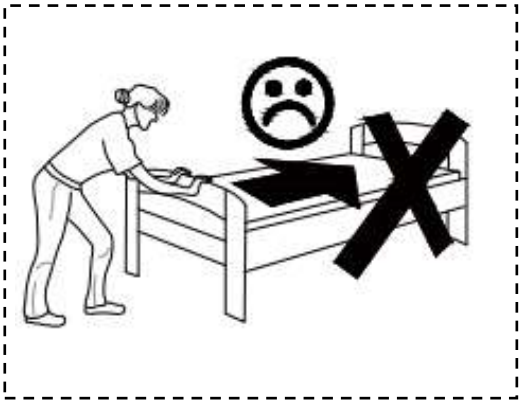

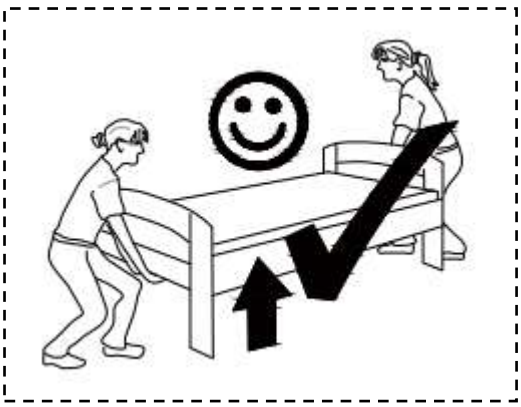



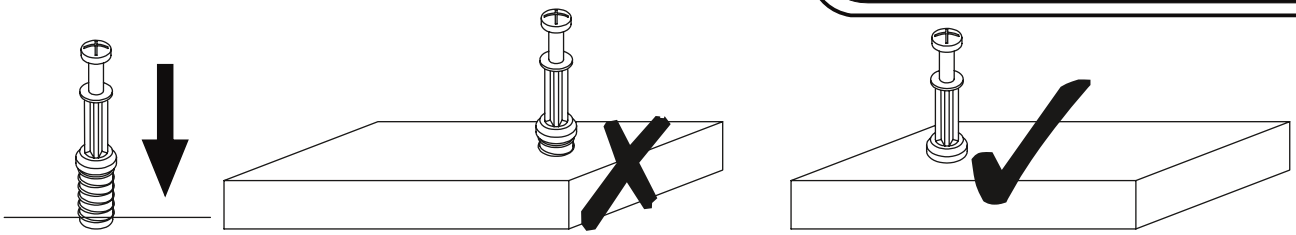

EN_QUICKFIT: Tighten quickfit until shoulder is flush with panel.Do not overtighten or undertighten.
FR_RACCORD RAPIDE:Faites serrer le raccord rapide jusqu'à ce que l'épaulement soit parfaitement encastré dans le panneau. Il ne faut ni trop serrer ni insuffisamment serrer.
ES_QUICKFIT:Apriete quickfit hasta que el hombre se descargue con el panel. NO lo sobreapriete ni lo apriete poco.
DE_QUICKFIT:Ziehen Sie den Quickfit fest, bis die Schulter mit der Platte bündig ist. Bitte nicht zu fest oder zu schwach anziehen.
IT_MONTAGGIO RAPIDO:Stringere il montaggio rapido fino a quando la spalla è a filo con il pannello, non stringere troppo o troppo poco.

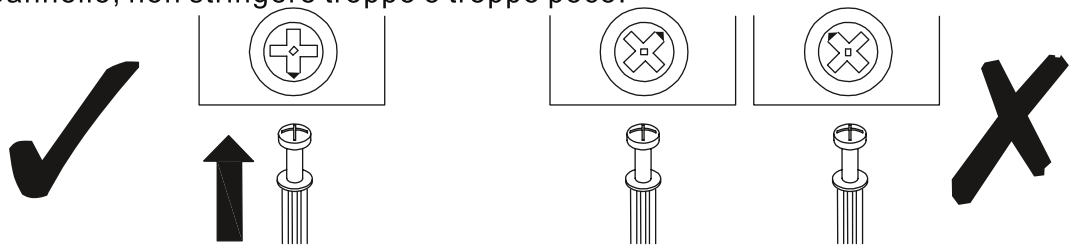

EN_CAM LOCK: When fitting cam lock, ensure starting position is correct before you insert connecting quickfit.
FR_SERRURE BATTEUSE:Avant d'insérer la serrure batteuse, veillez à la bonne orientation avant d'insérer le raccord rapide.
ES_CIERRE DE LA CÁMARA:Cuando instale el cierre de la cámara, asegúrese de que la posición de inicio es correcta antes de que inserte el quickfit conector.
DE_CAM-LOCK:Achten Sie bei der Montage des Cam-Locks auf die richtige Ausgangsposition, bevor Sie den Quickfit einsetzen.
IT_BLOCCAGGIO A CAMMA:Quando si monta il bloccaggio a camma, assicurarsi che la posizione iniziale sia corretta prima di inserire il montaggio rapido di collegamento.

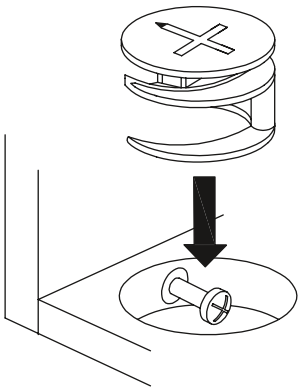

EN_ Quickfit head should be in the centre of the cam lock when the two panels are joined.
Cam lock should be inserted before quickfit.
FR_ Lorsque les deux panneaux sont assemblés, la tête du raccord rapide doit reposer au centre de la serrure batteuse.
Il faut insérer la serrure batteuse avant le raccord rapide.
ES_ El cabezal del quickfit debe estar en el centro del cierre de la cámara cuando se unan los dos paneles.
Se debe insertar el cierre de la cámara antes que el quickfit.
DE_ Der Quickfit-Kopf sollte sich in der Mitte des Cam-Locks befinden, wenn die beiden Platten zusammengefügt sind.
Der Cam-Lock sollte vor dem Quickfit eingesetzt werden.
IT_ La testa del montaggio rapido deve trovarsi al centro del bloccaggio a camma quando i due pannelli sono uniti.
Il Bloccaggio a Camma deve essere inserito prima del montaggio rapido.

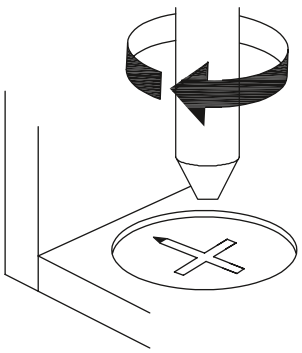

EN_ Turn cam lock clockwise to tighten.
FR_ Faites tourner la serrure batteuse dans le sens des aiguilles d'une montre pour la resserrer.
ES_ Gire el cierre de la cámara en sentido horario para apretarlo.
DE_ Drehen Sie den Cam-Lock im Uhrzeigersinn, um ihn festzuziehen.
IT_ Ruotare il bloccaggio a camma in senso orario per stringere.

Part List N616P528691

① X 1 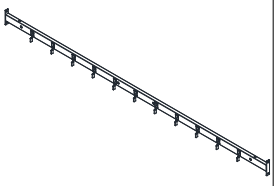	② X 1 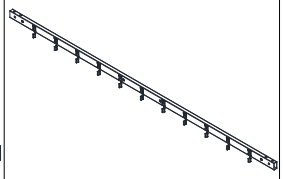	⑤ X 11 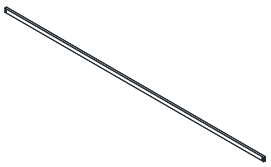	⑥ X 2 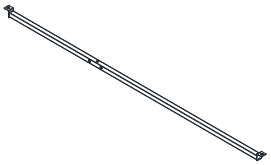	⑦ X 1 
⑩ X1 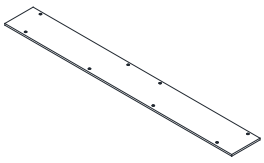	⑪ X1 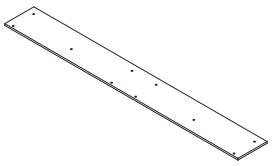	⑭ X2 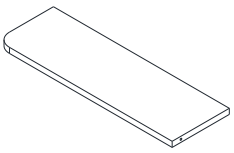	⑮ X2 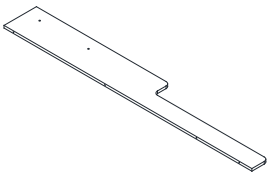	㊸ X 1 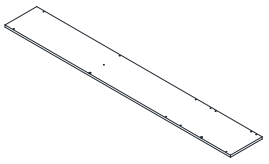
㊹ X1 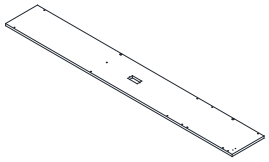				

Part List N616P528692

⑯ X 1 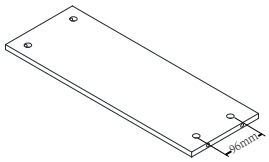	⑰ X 1 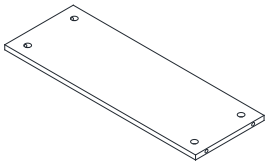	⑲ X 1 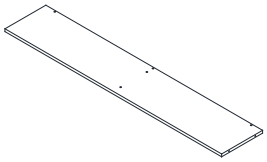	㉔ X 2 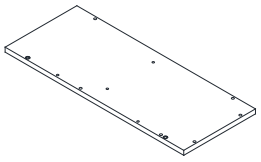	㉘ X 2 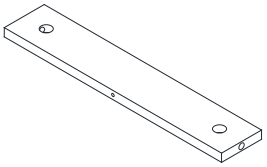
㉛ X1 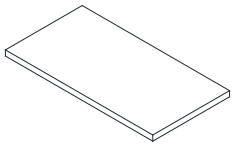	㉟ X2 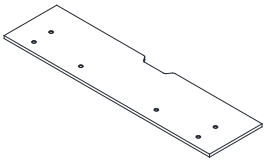	㊱ X2 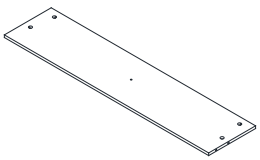	㊲ X2 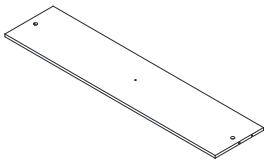	Ⓣ X 2 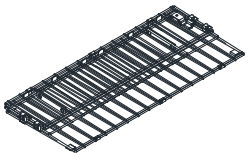

Part List N616P528693

③ X2 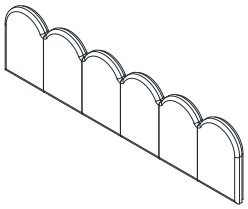	④ X4 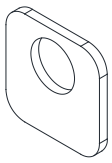	⑧ X2 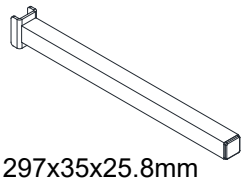 297x35x25.8mm	⑨ X1 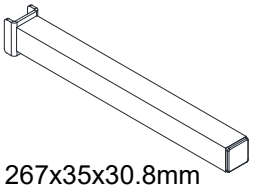 267x35x30.8mm	⑫ X1 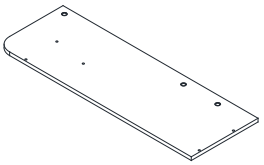
⑬ X1 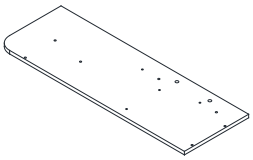	⑱ X1 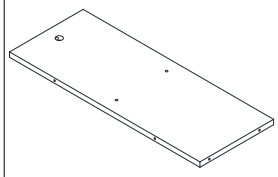	⑳ X1 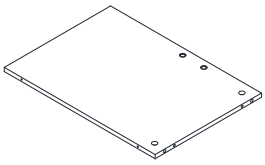	㉑ X1 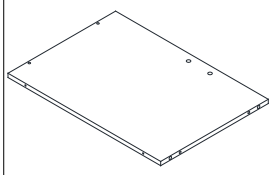	㉒ X1 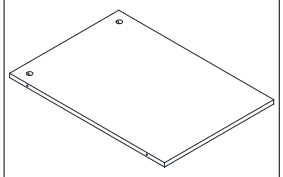
㉓ X1 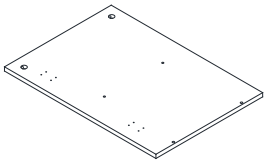	㉕ X1 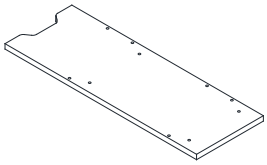	㉖ X1 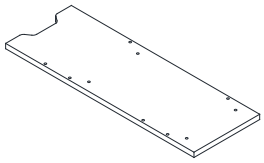	㉗ X2 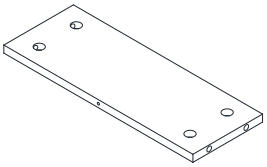	㉙ X1 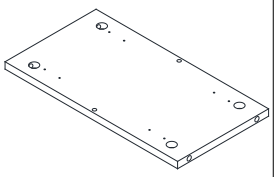
㉚ X1 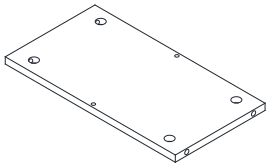	㉜ X1 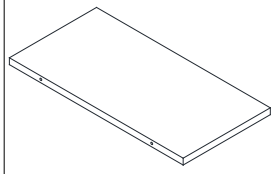	㉝ X1 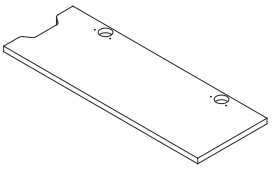	㉞ X2 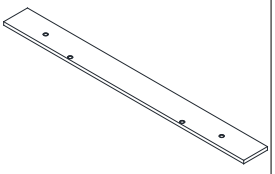	㊳ X6 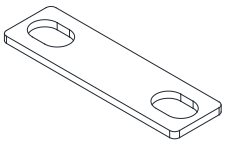
㊴ X1 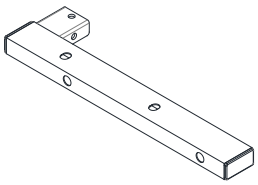	㊵ X1 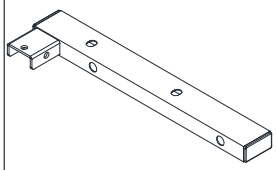	㊶ X1 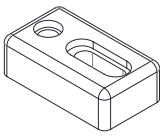	㊷ X2 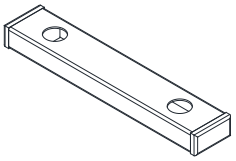	Ⓤ X1 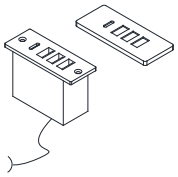
Ⓥ X12 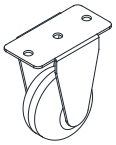	Ⓧ X2 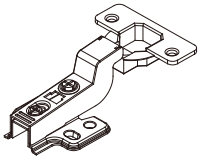	Ⓨ X4 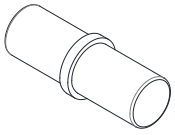	Ⓩ X49 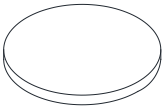	

Hardware List N616P528693

A x 38  M8X12	B x 18 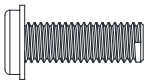 M8X25	C x 4 White Zinc 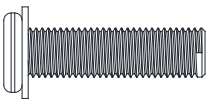 M8X30	D x 11 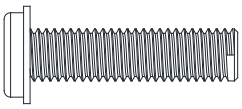 M8X33	E x 8  M4X10
F x 45  M5X40	G x 49  Φ7X40	H x 49  Φ15X10	I x 22 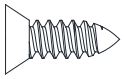 ST4.2X12	J x 2 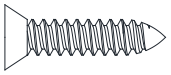 ST4.2X18
K x 14  Φ6X30	L x 4 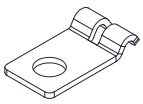 38X25X7	M x 1 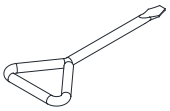	N x 1 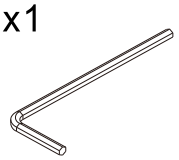 2.5X2.5	O x 1 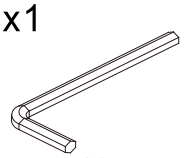 3X3
P x 1 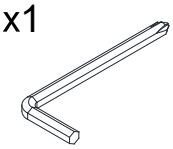 5X5				

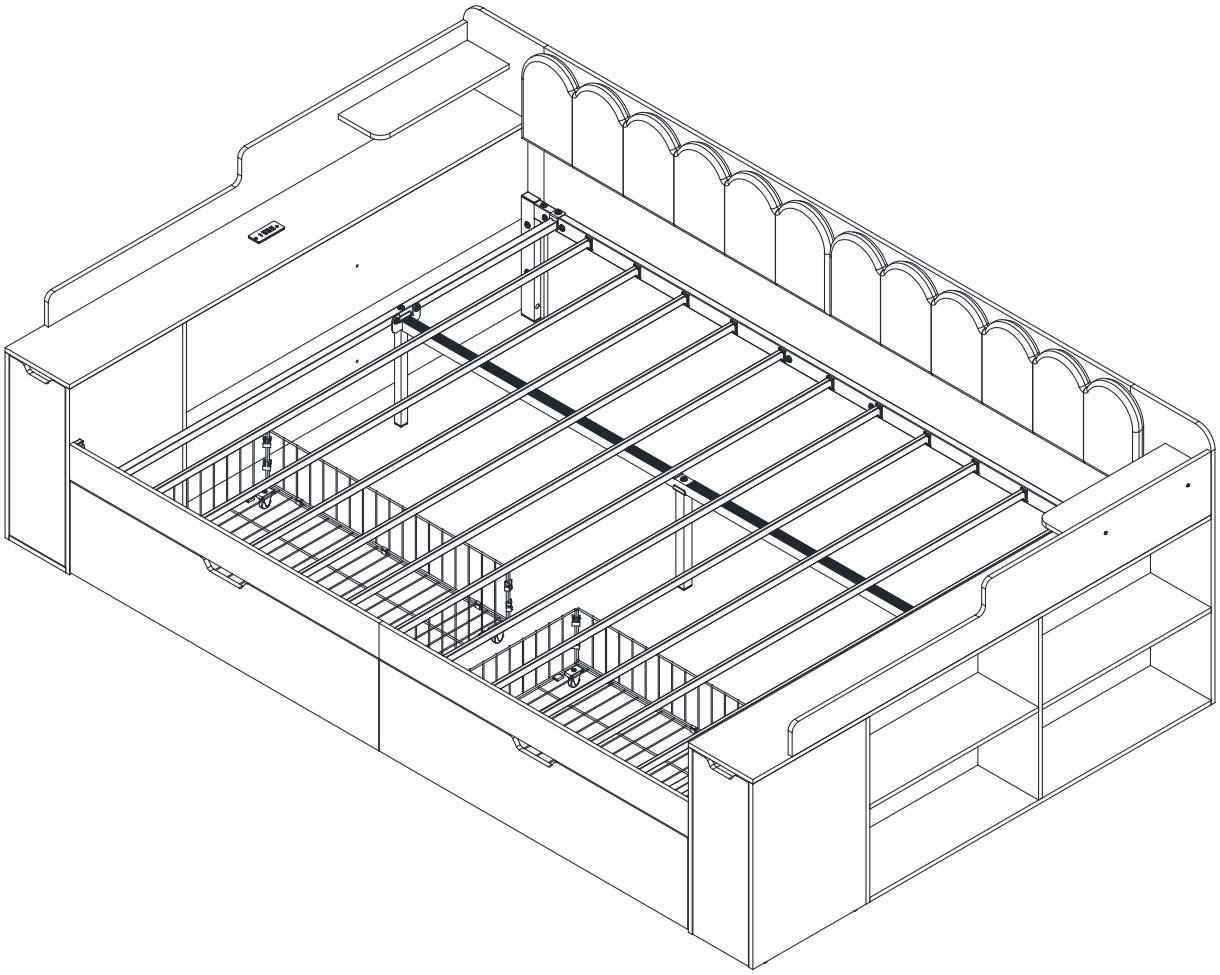

Type 1

Page: 10-20

Stückliste

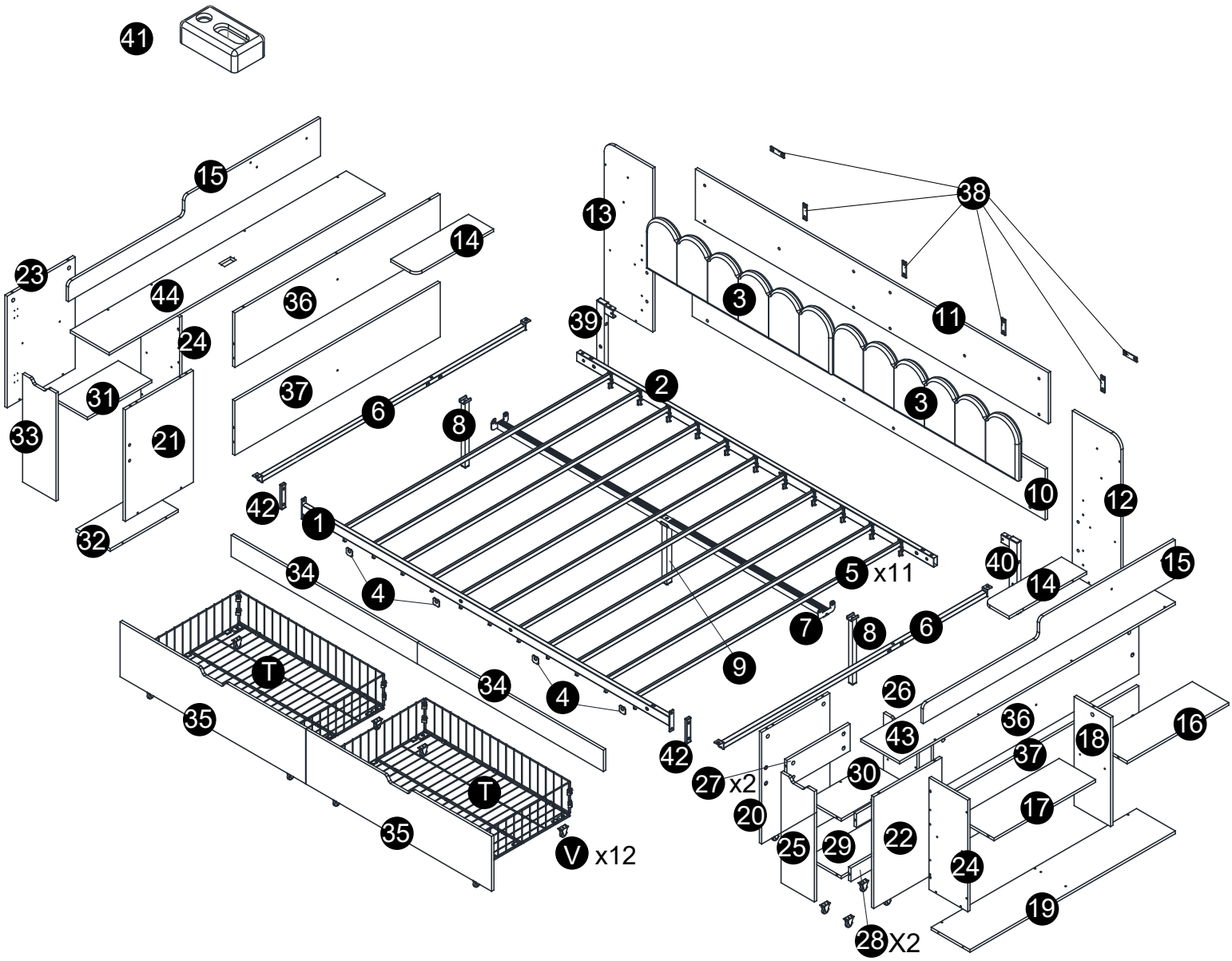

41
15
23
44
36
14
24
31
37
33
21
32
6
8
13
38
3
11
39
2
3
10
12
42
1
34
4
5 x11
40
14
15
7
8
6
9
T
34
4
26
35
36
43
18
16
42
37
27 x2
30
T
20
17
35
25
29
22
V x12
24
19
28 X2

1

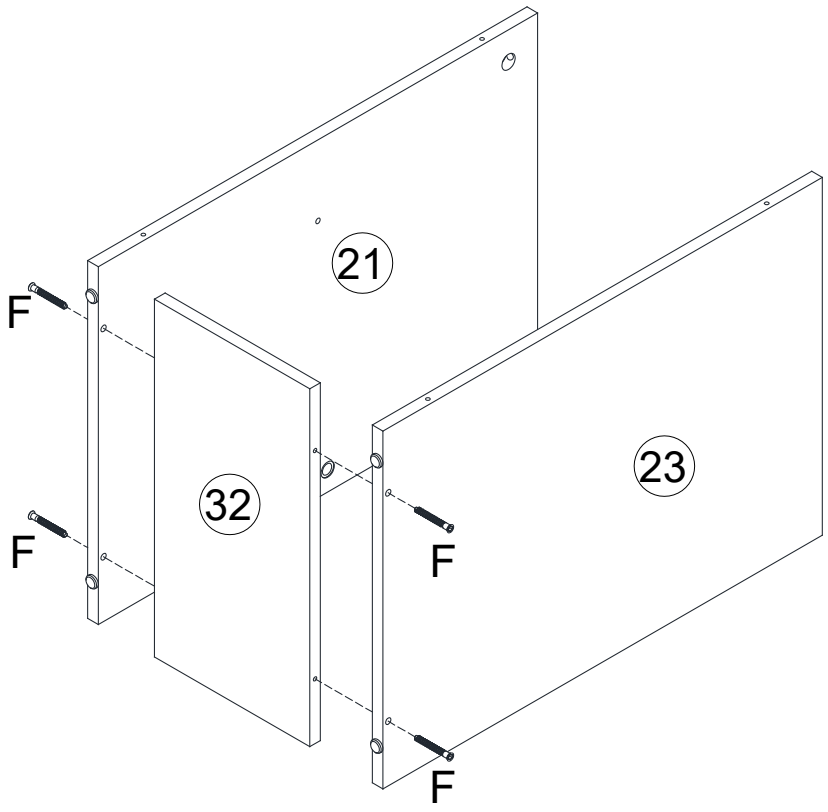

F x4

M5X40

2

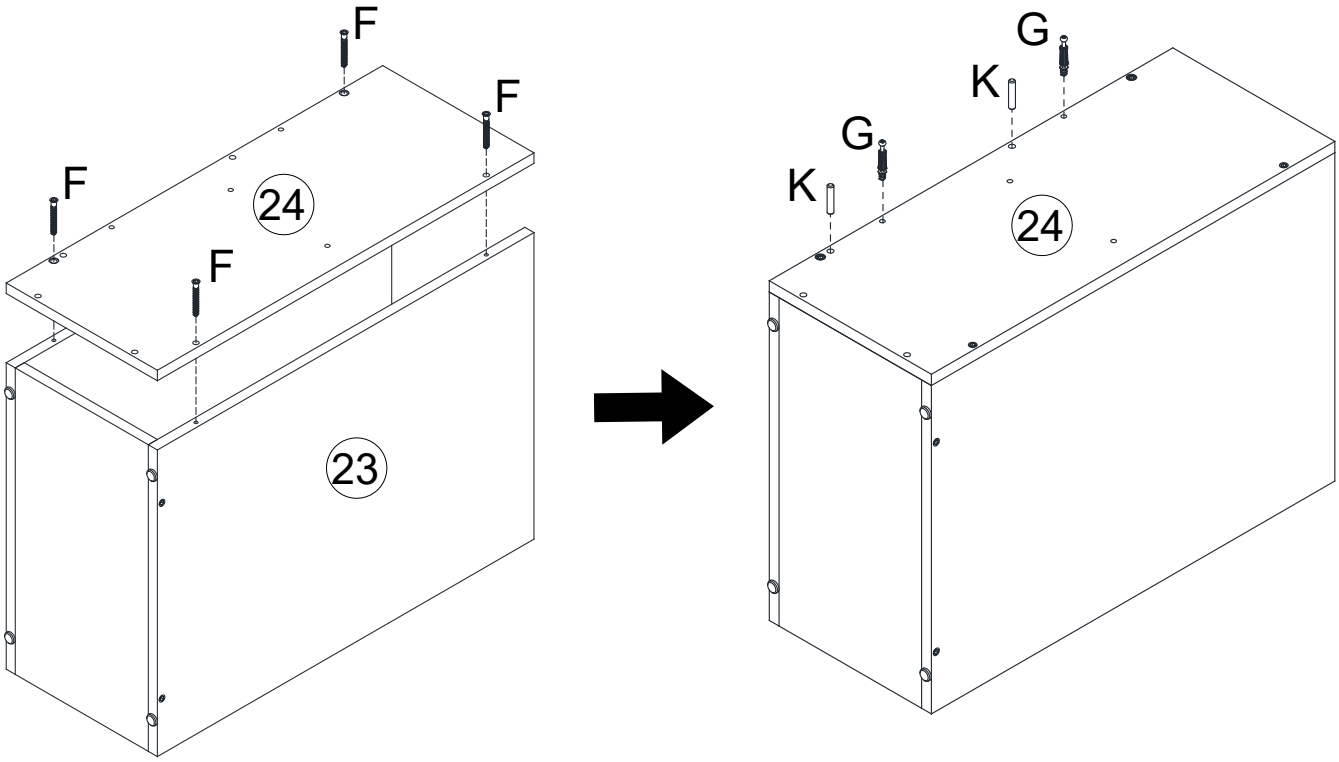

F x4	G x2	K x2
		
M5X40	Φ7X40	Φ6X30

3

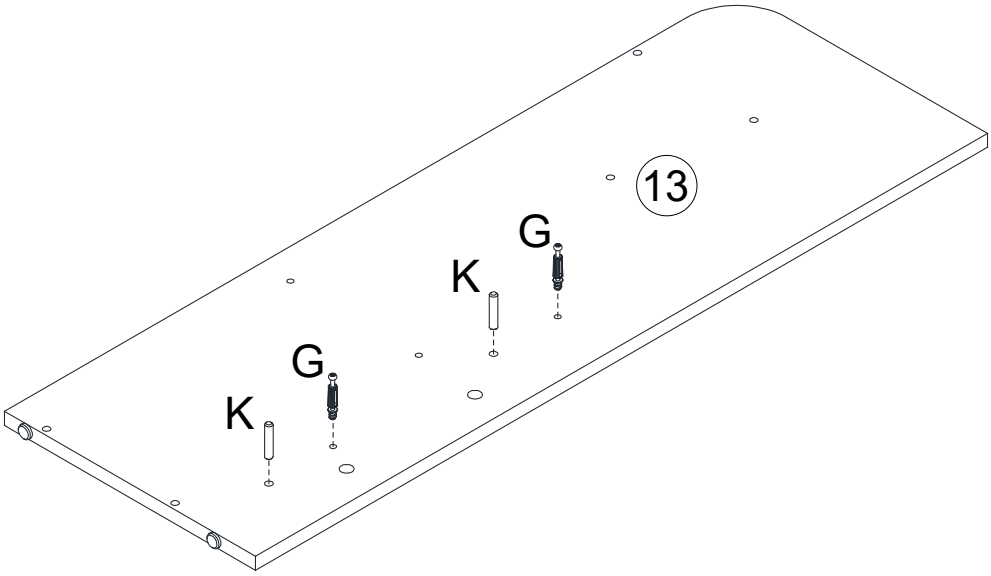

Gx2	Kx2
Φ7X40	Φ6X30

4

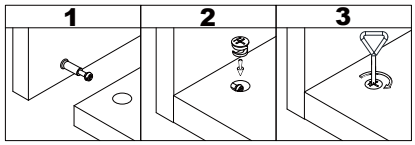

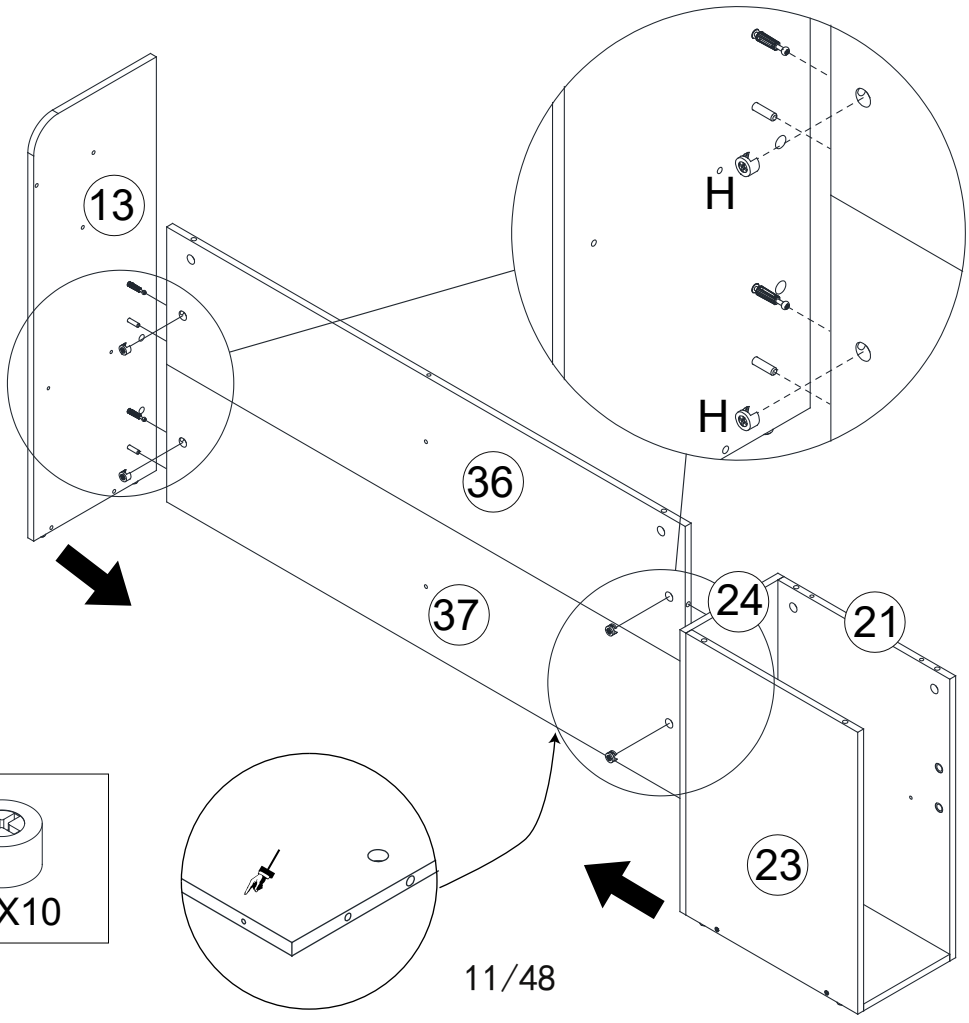

Hx4
Φ15X10

5

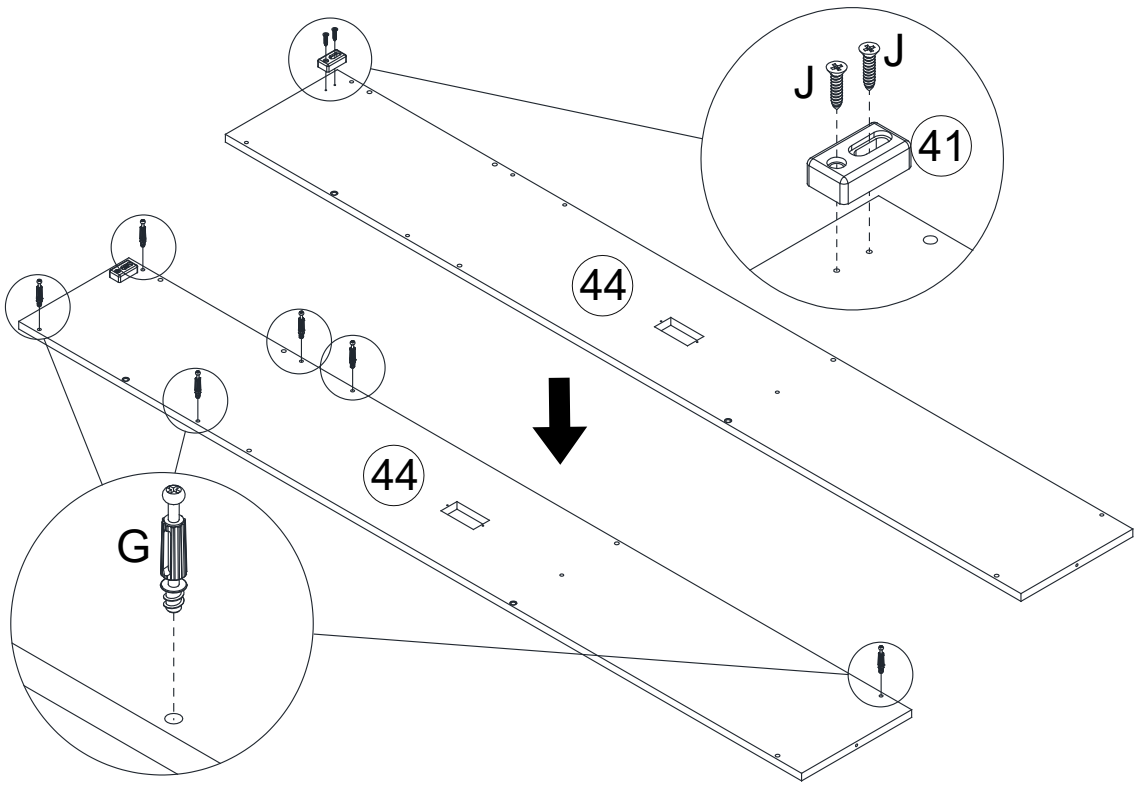

Gx6	J x2
Φ7X40	ST4.2X18

6

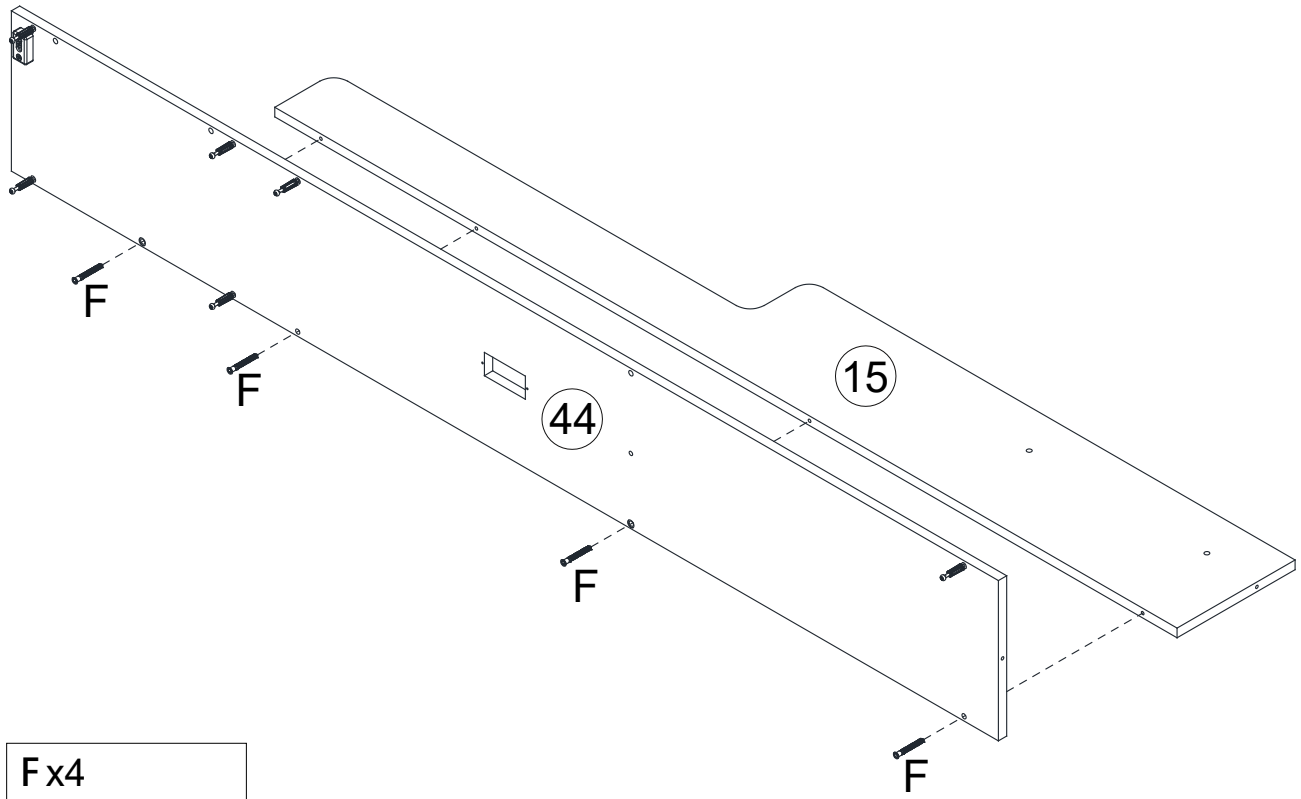

F x4
M5X40

7

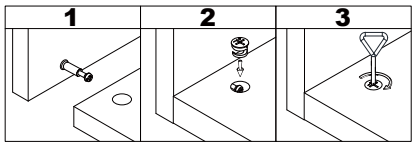

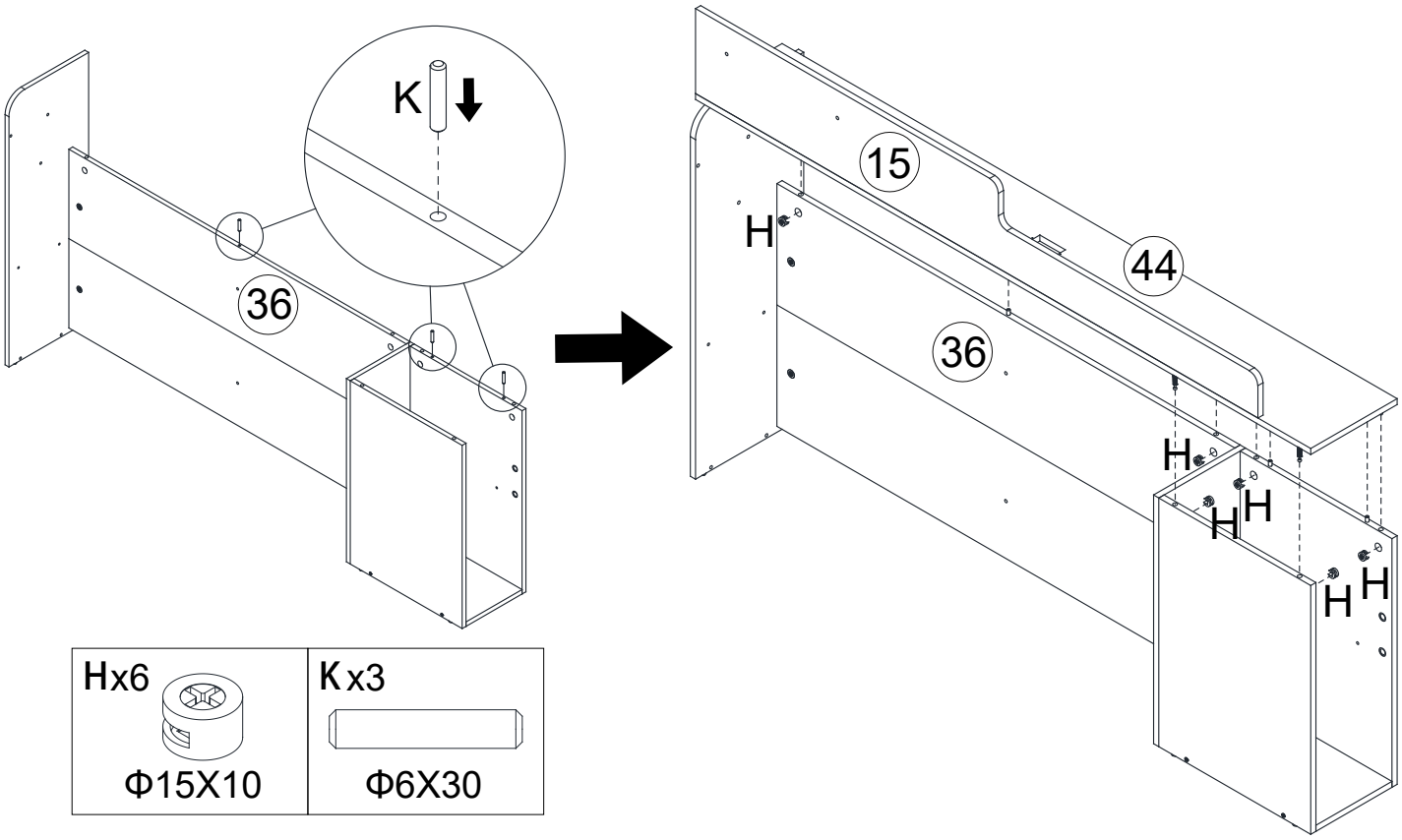

Hx6	Kx3
Φ15X10	Φ6X30

8

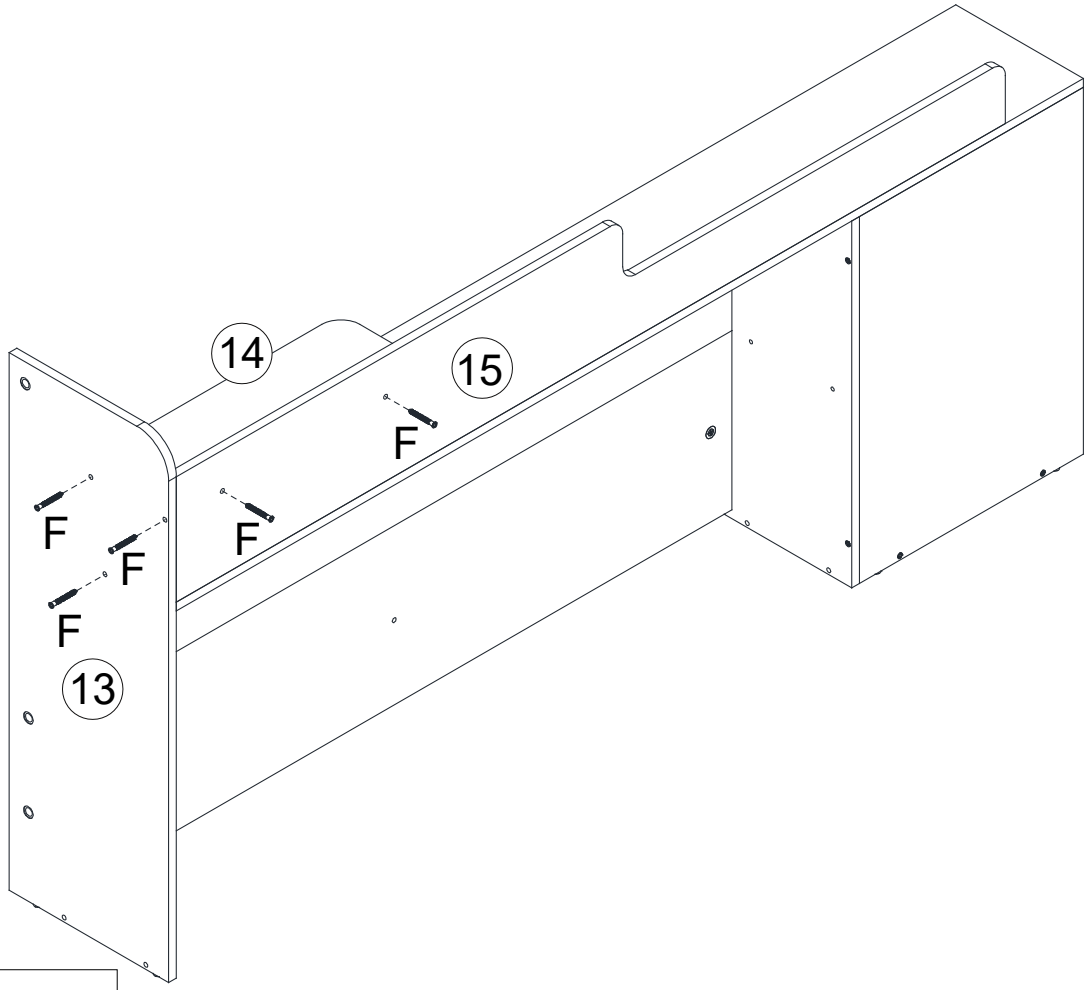

Fx5
M5X40

9

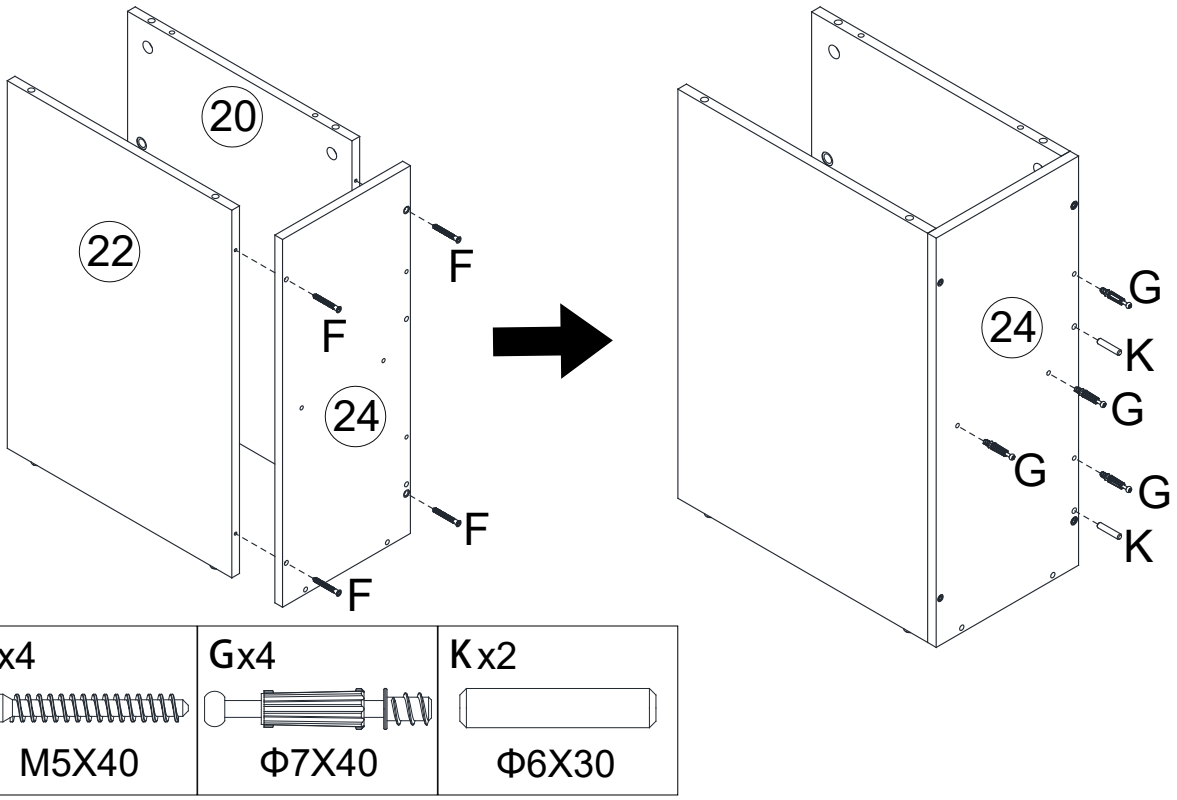

F x4	G x4	K x2
M5X40	Φ7X40	Φ6X30

10

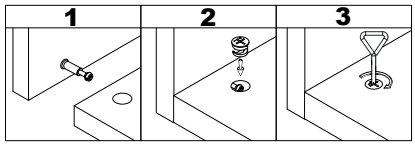

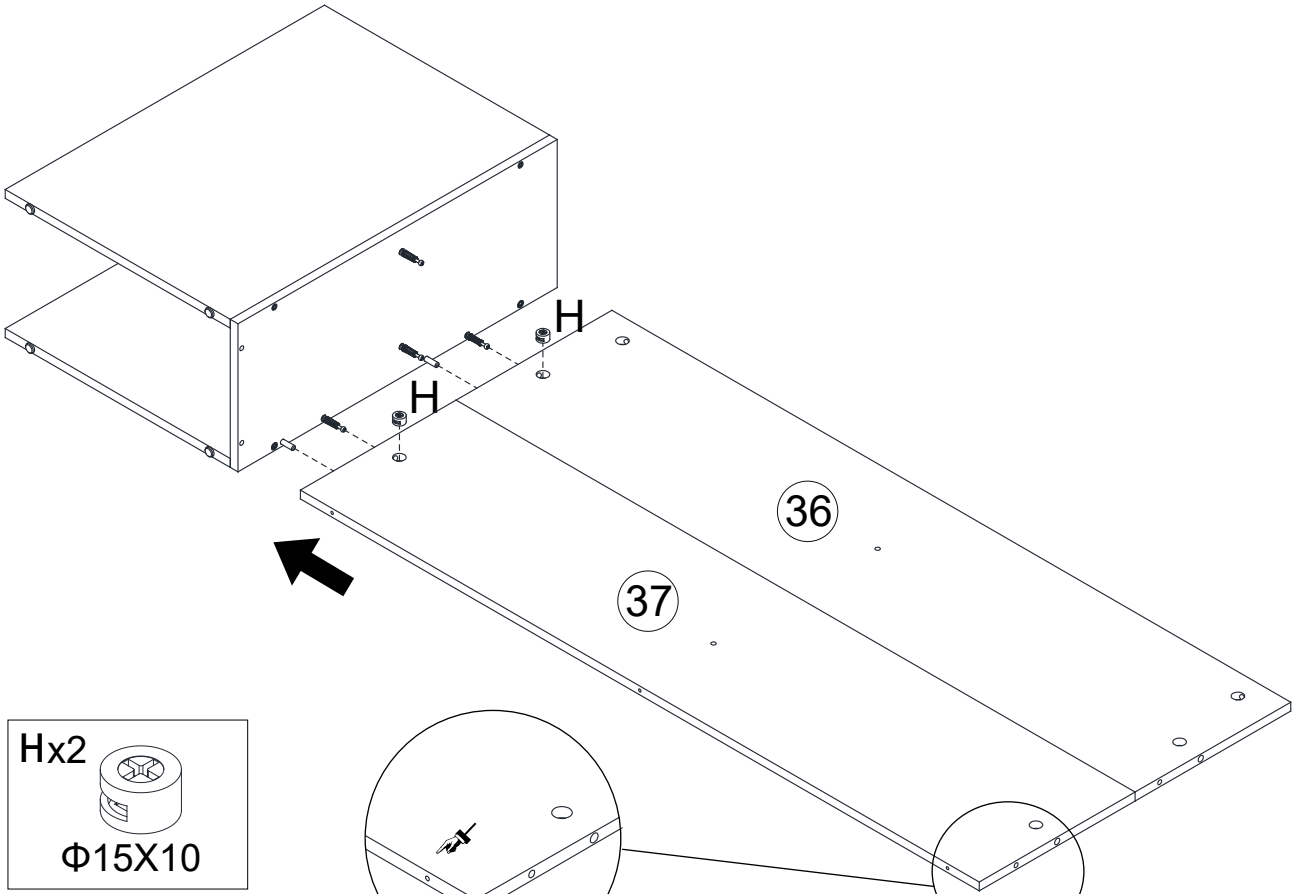

H x2
Φ15X10

11

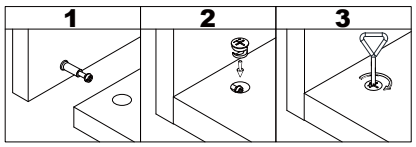

12

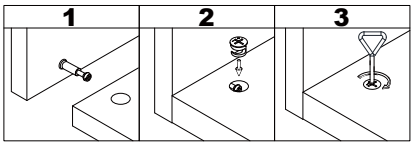

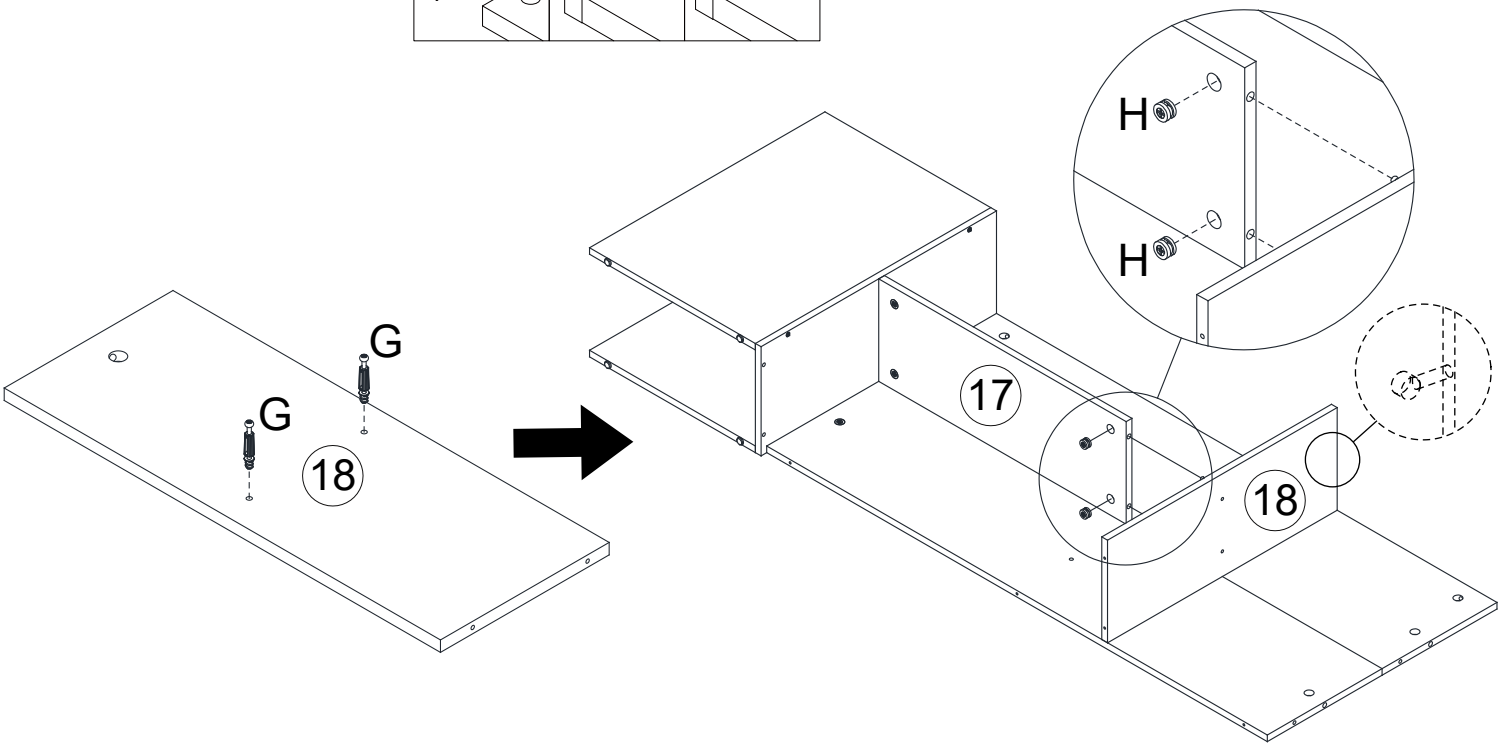

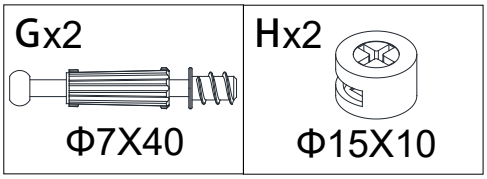

13

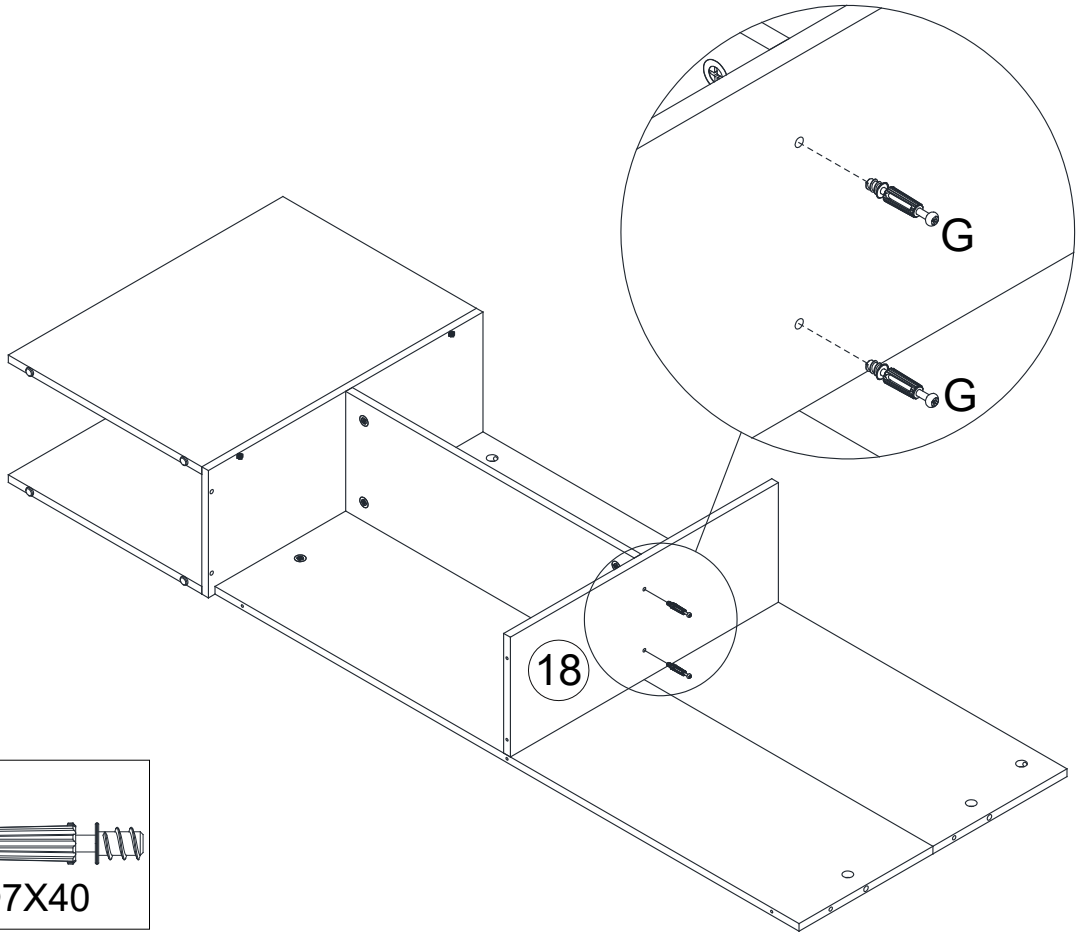

14

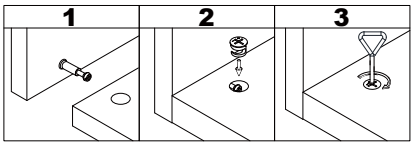

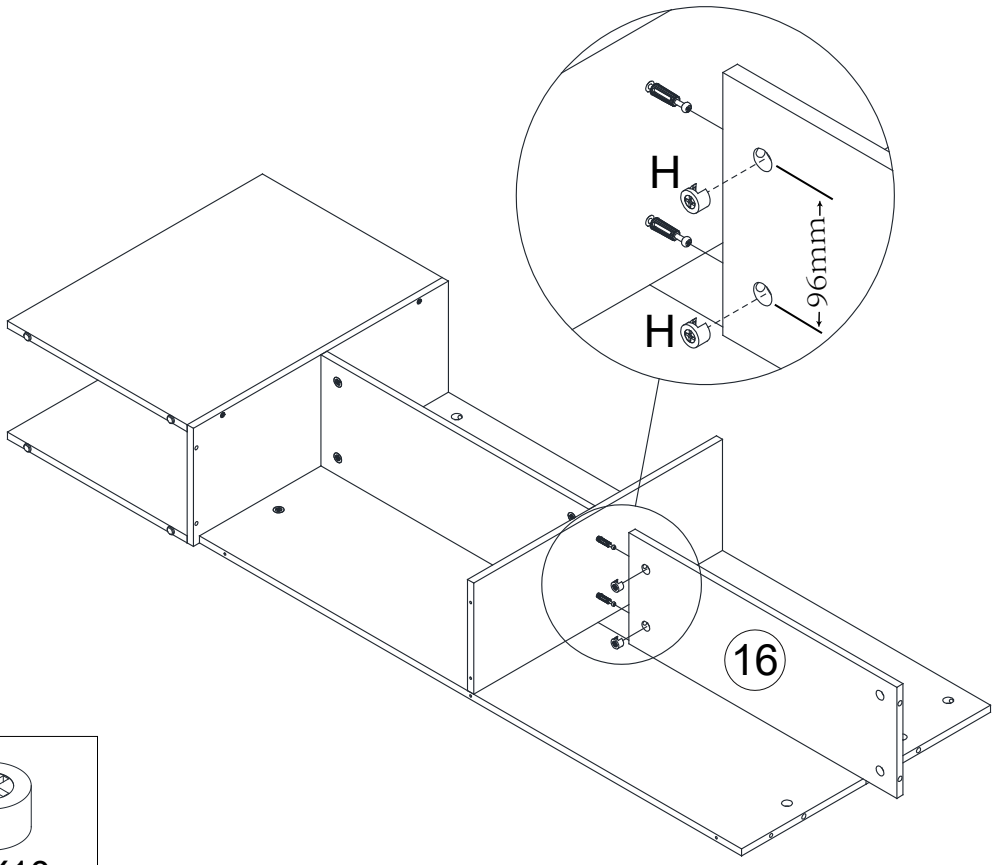

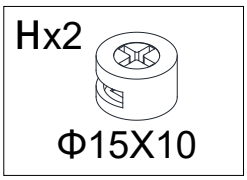

15

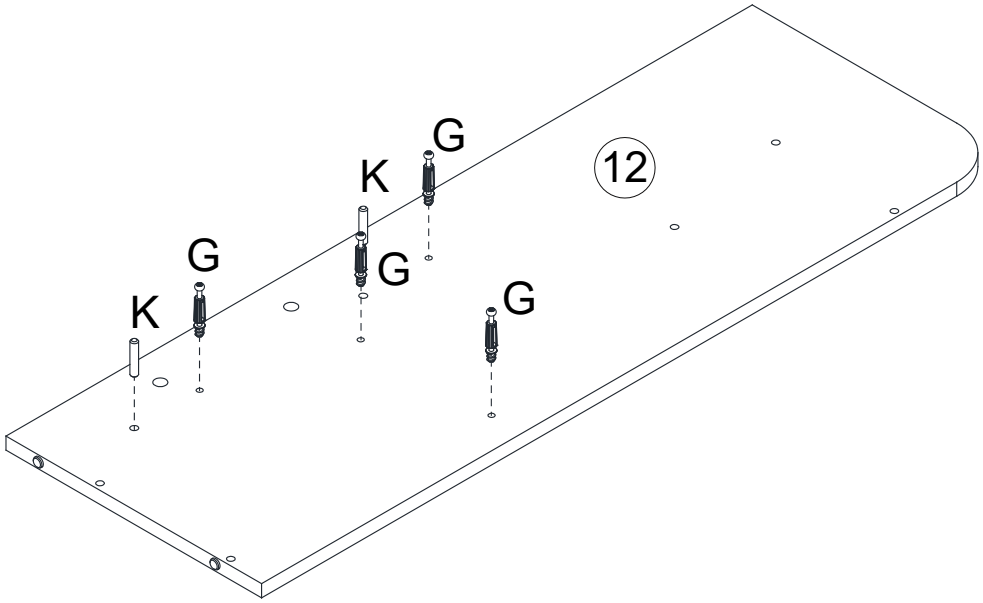

Gx4	Kx2
	
Φ7X40	Φ6X30

16

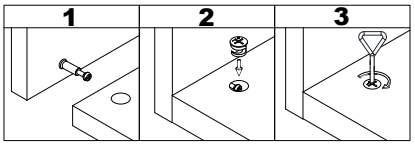

Hx4
Φ15X10

17

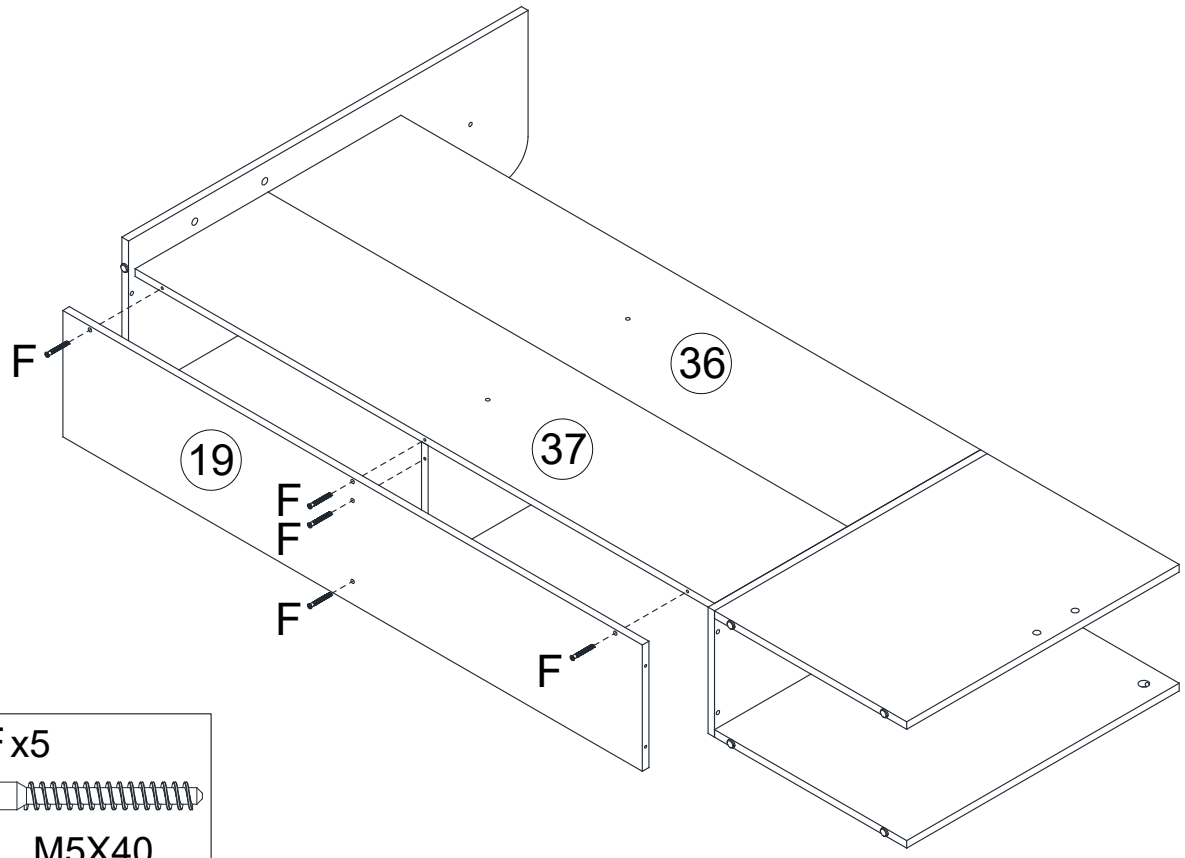

F x5

M5X40

18

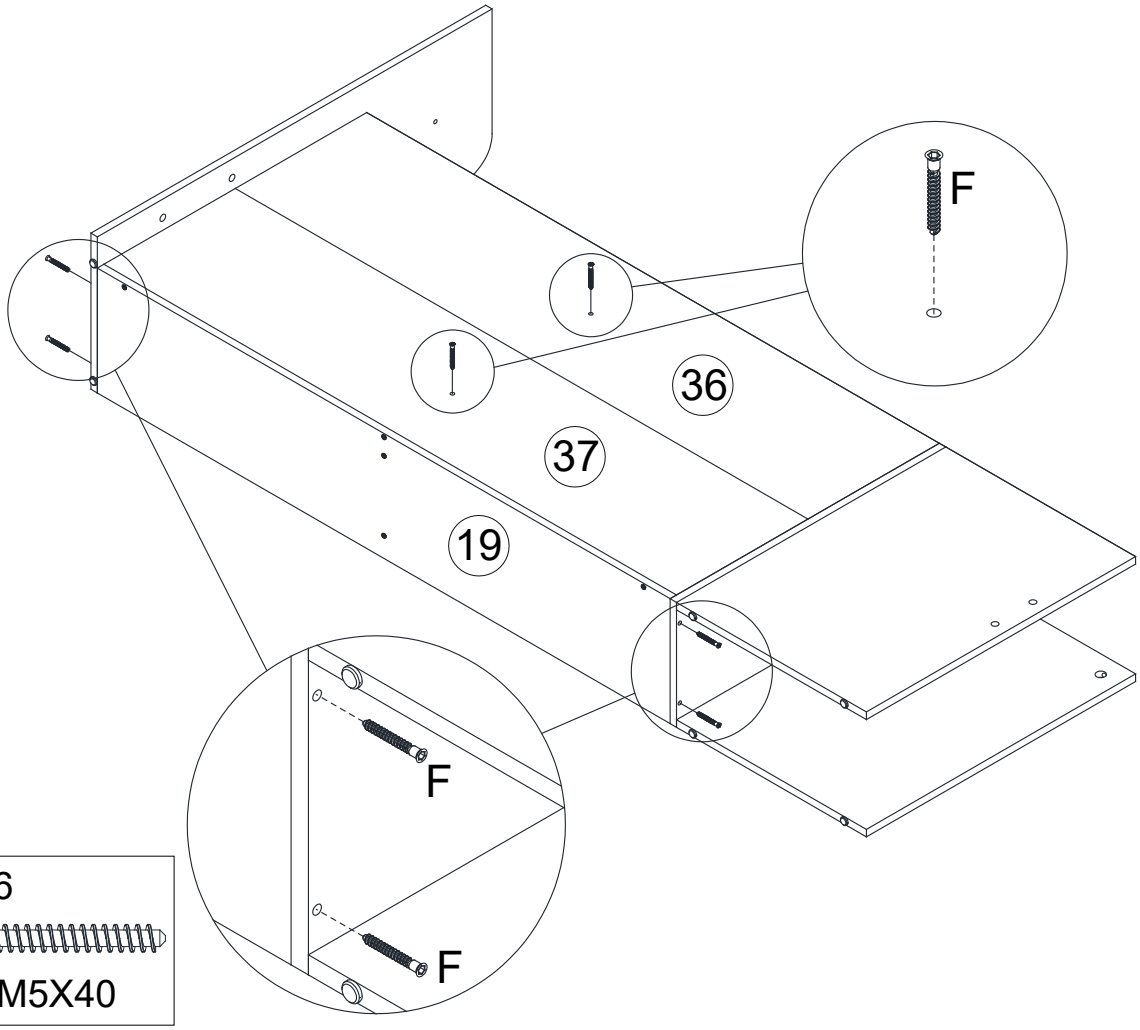

F x6

M5X40

19

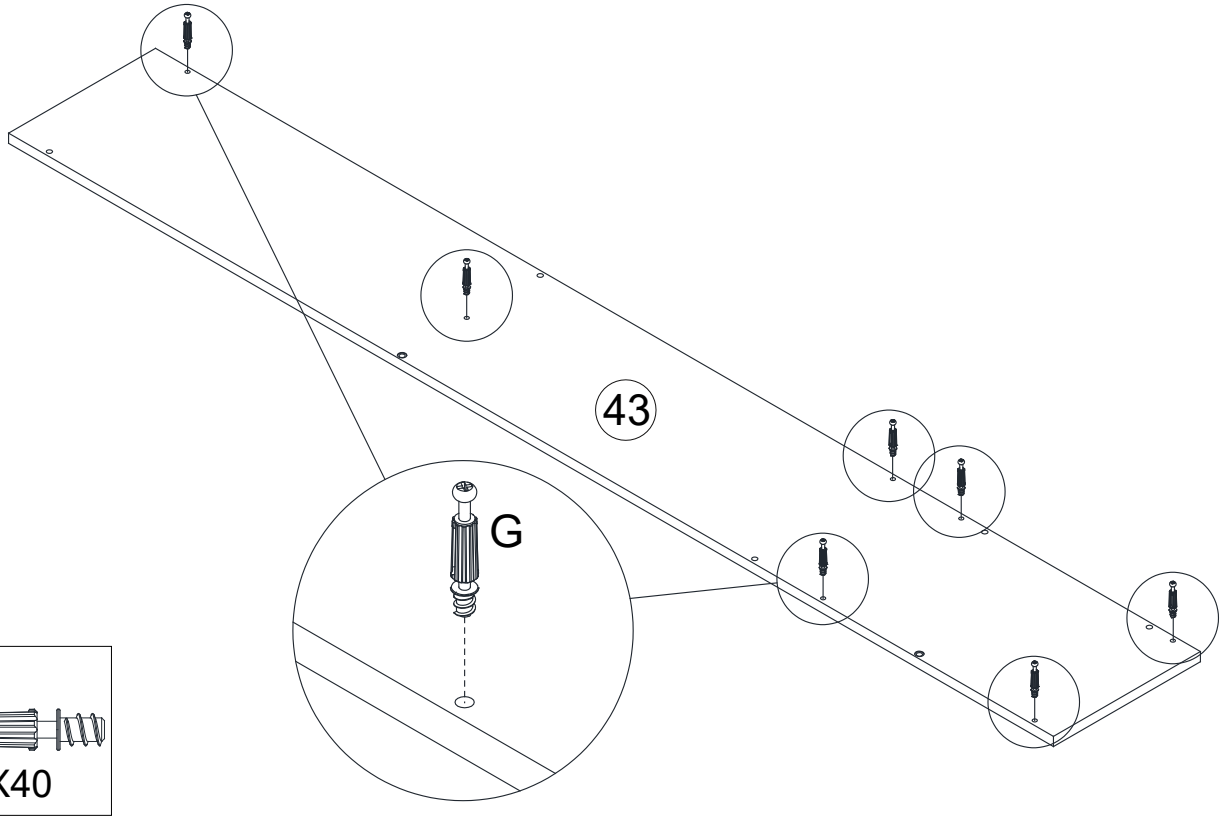

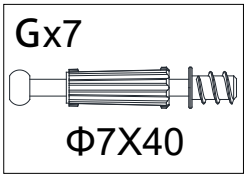

20

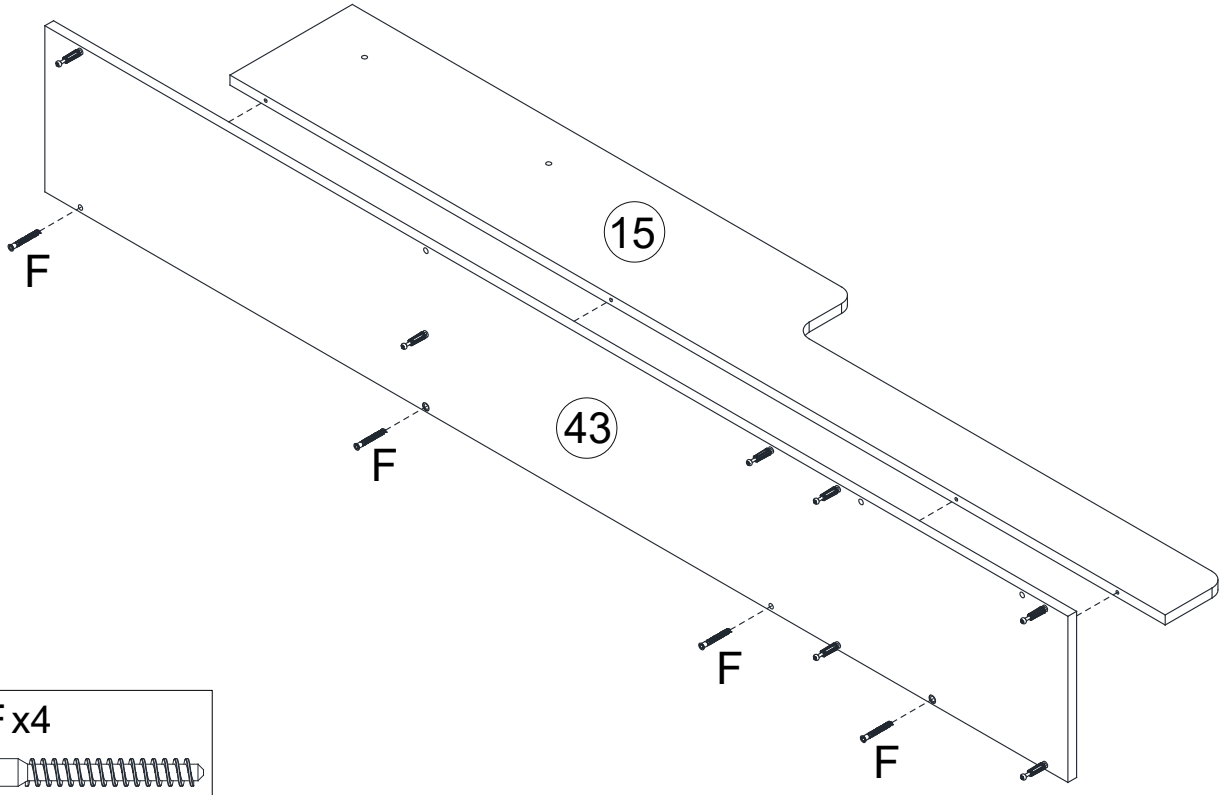

21

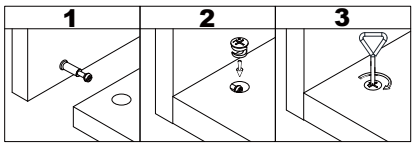

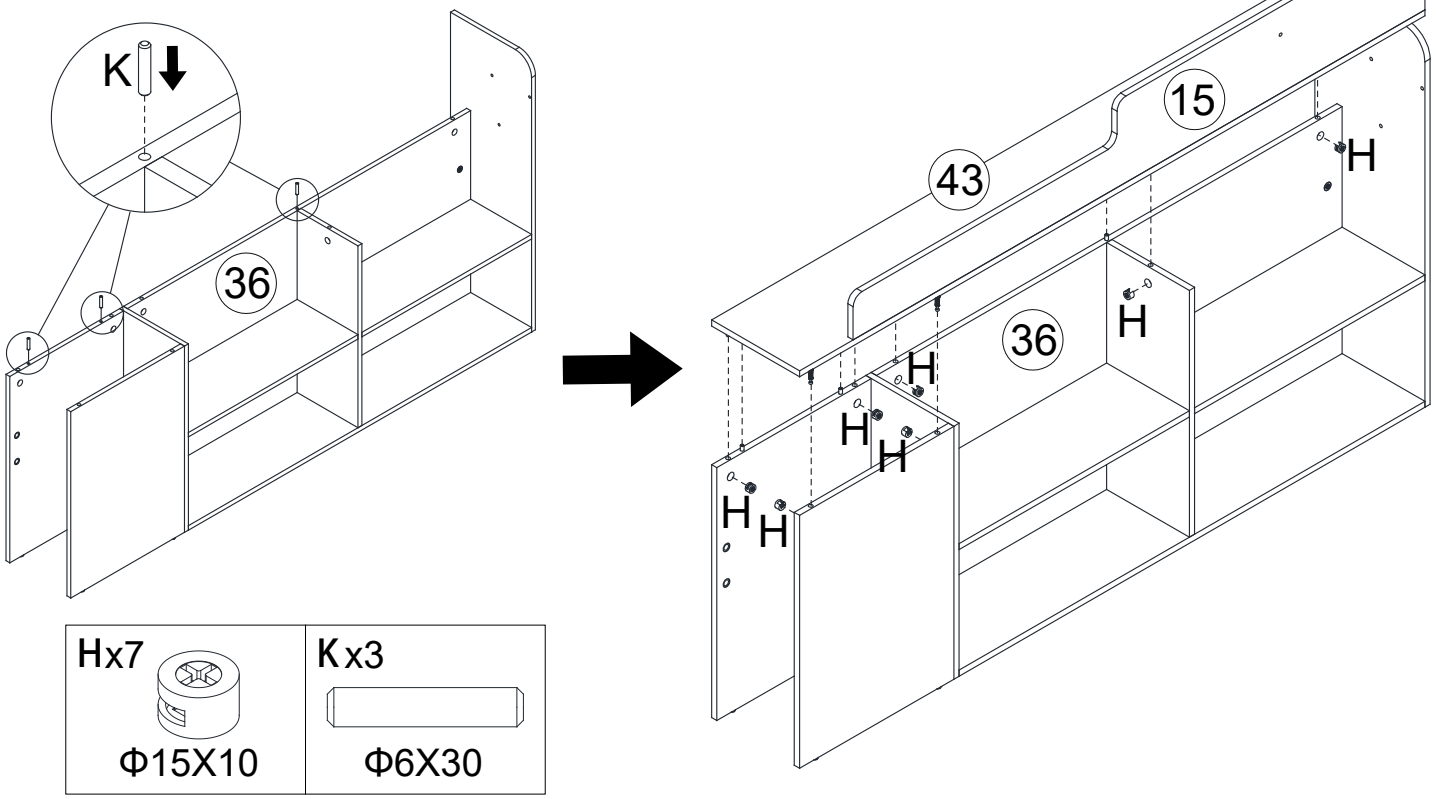

Hx7	Kx3
Φ15X10	Φ6X30

22

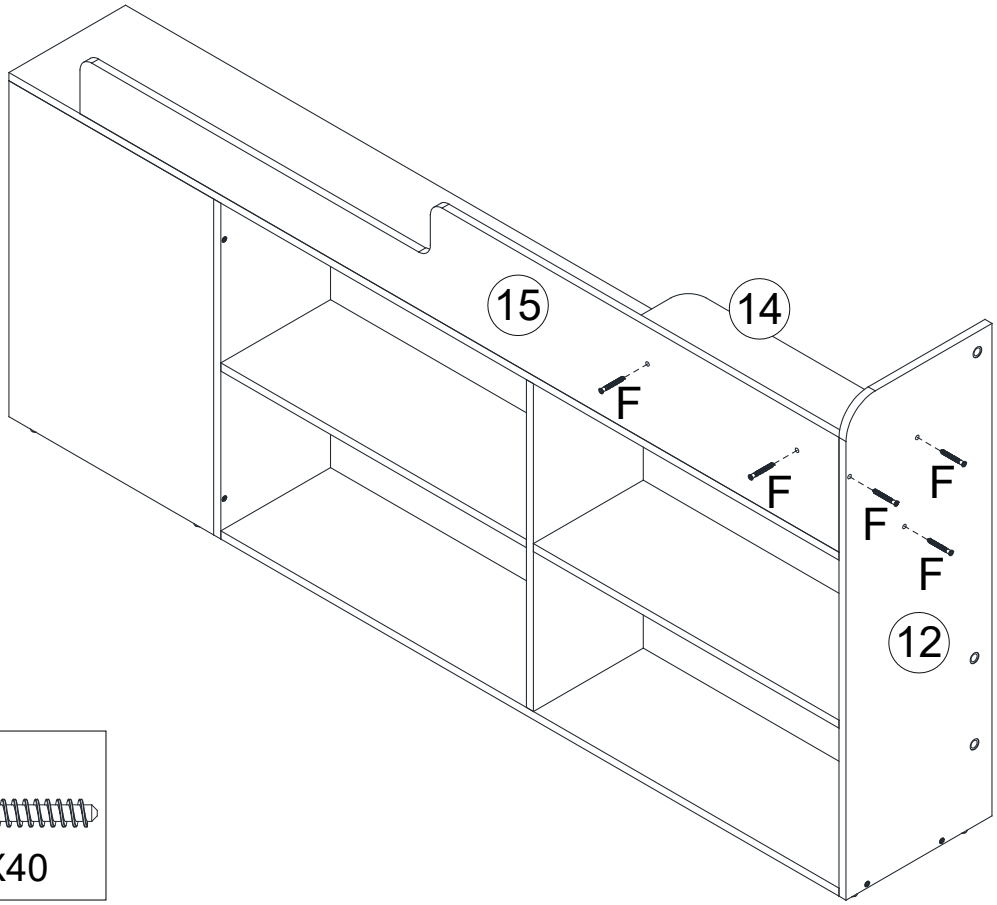

Fx5
M5X40

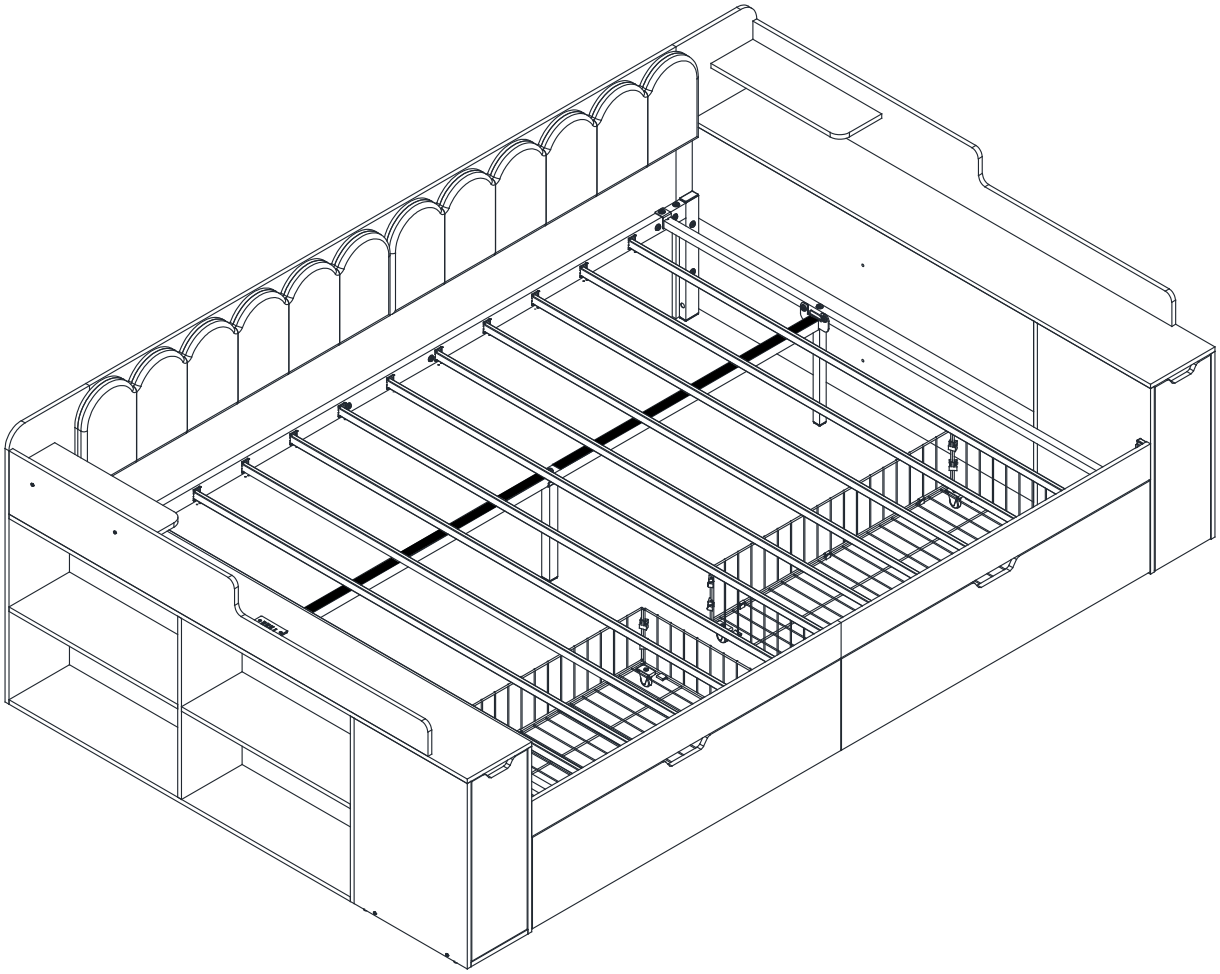

Type 2

Page: 23-33

Stückliste

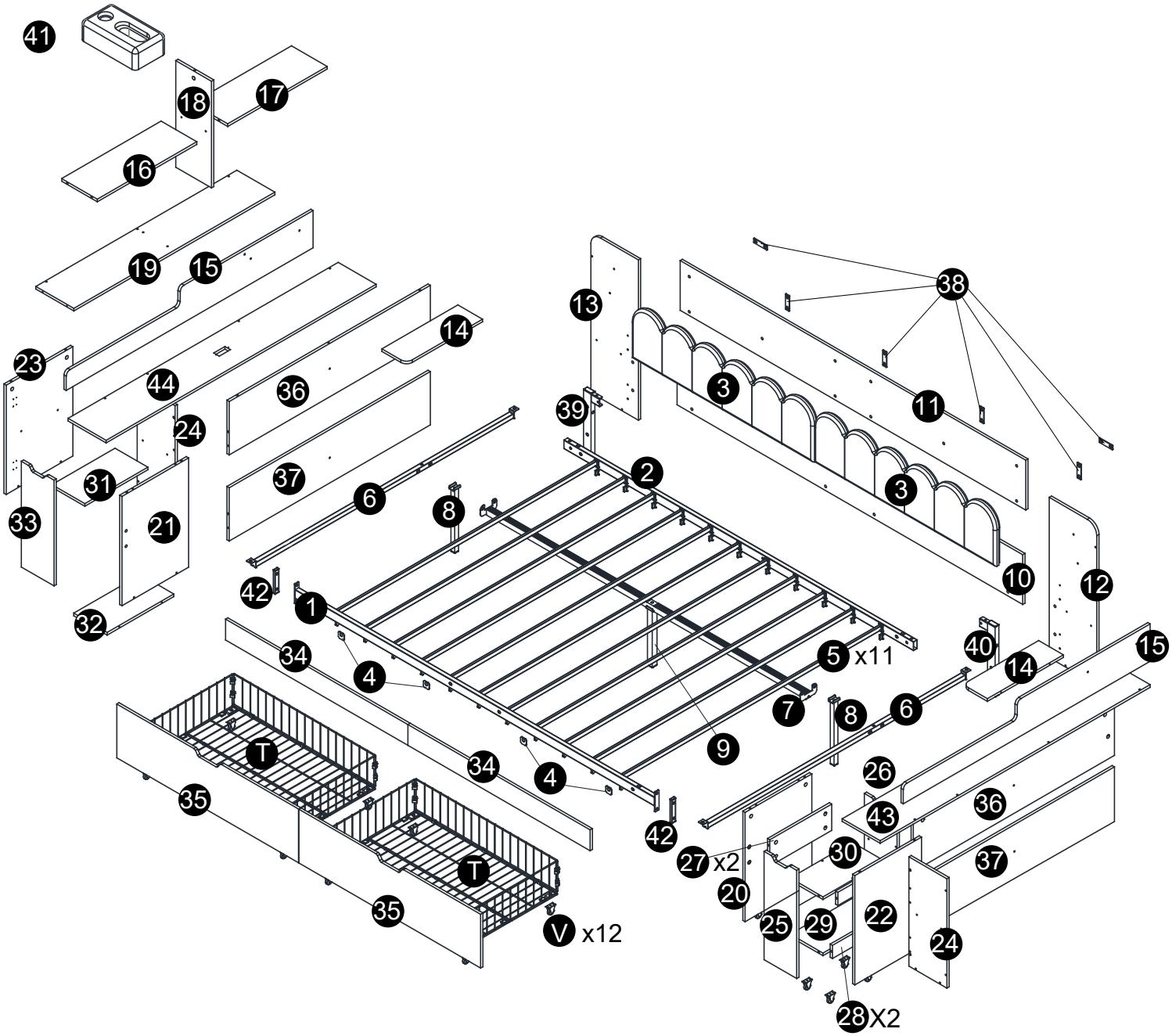
41
18
17
16
19
15
23
44
36
14
24
31
37
33
21
32
6
8
13
38
3
11
39
2
3
10
12
42
1
34
4
5 x11
40
14
15
7
8
6
9
T
34
4
26
35
43
36
42
27 x2
30
37
T
20
35
V x12
25
29
22
24
28 X2

1

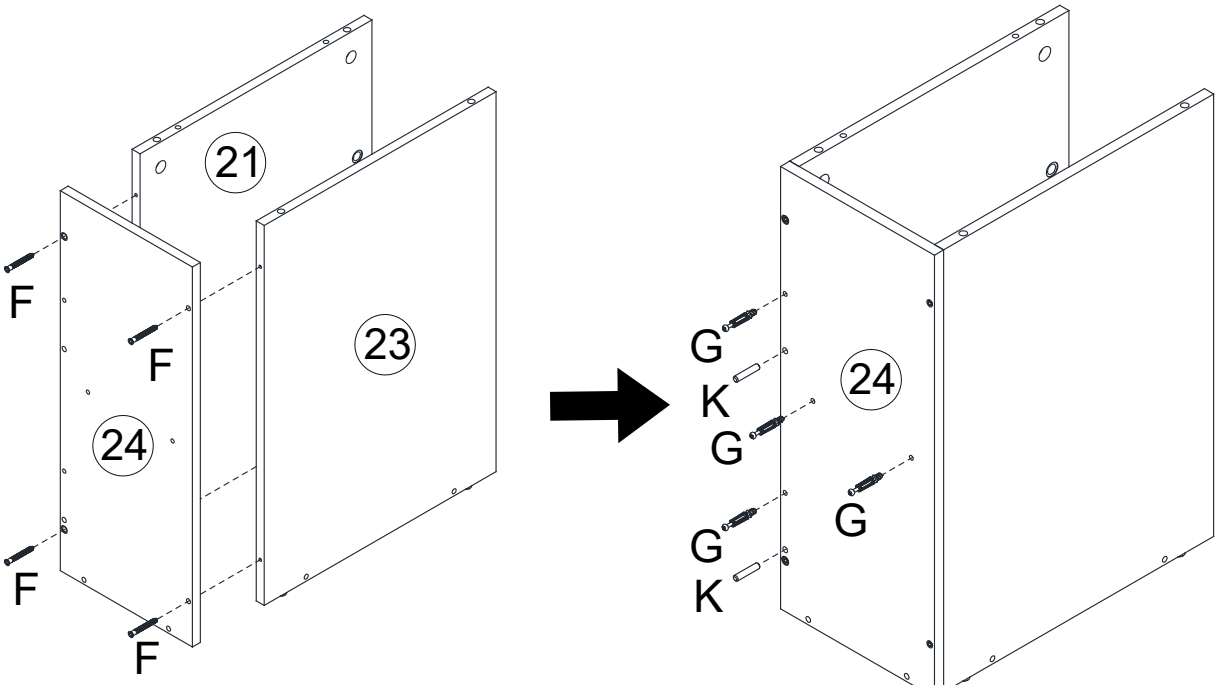

F x4	G x4	K x2
M5X40	Φ7X40	Φ6X30

2

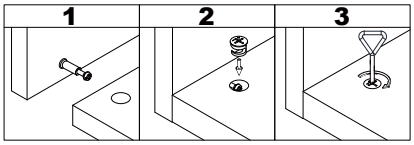

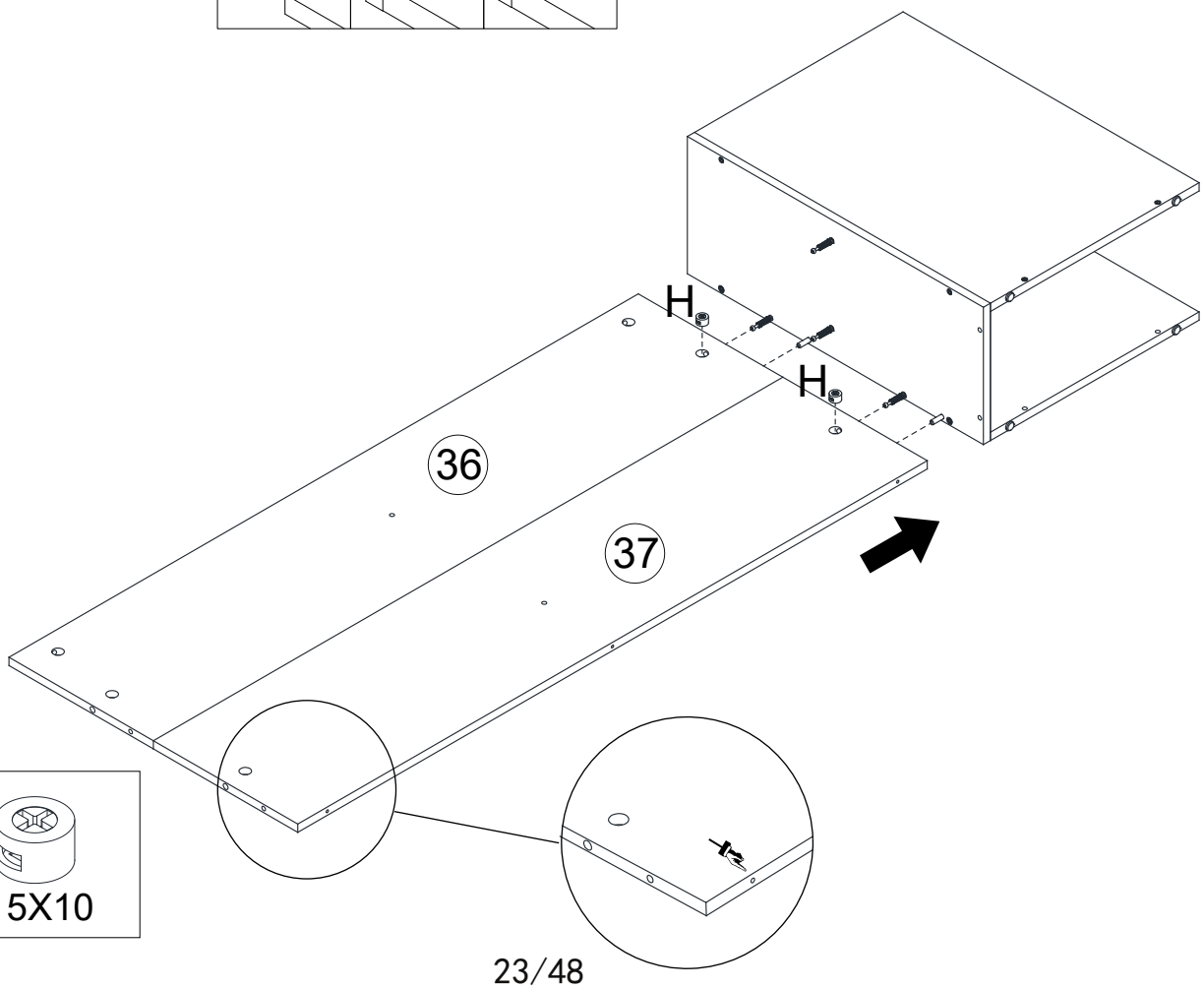

H x2
Φ15X10

3

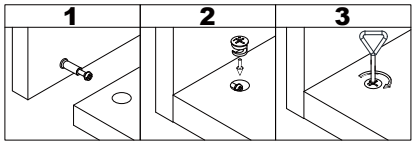
1
2
3

H
H
16
96mm

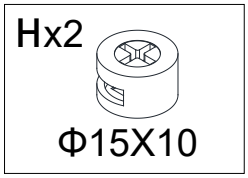
Hx2
Φ15X10

4

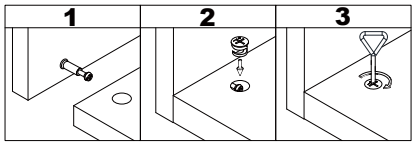
1
2
3

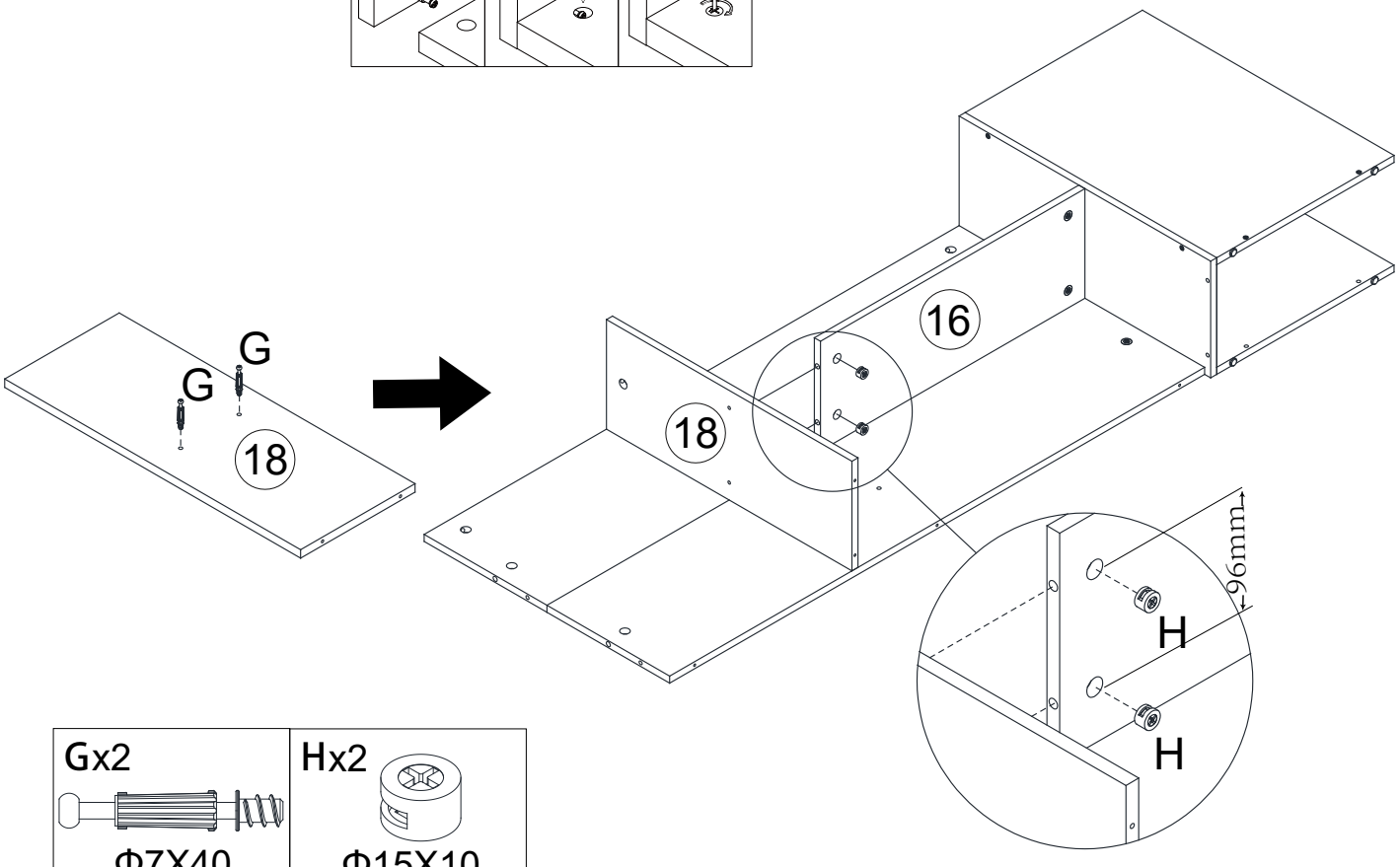
G
G
18
16
18
96mm
H
H

Gx2
Φ7X40
Hx2
Φ15X10

5

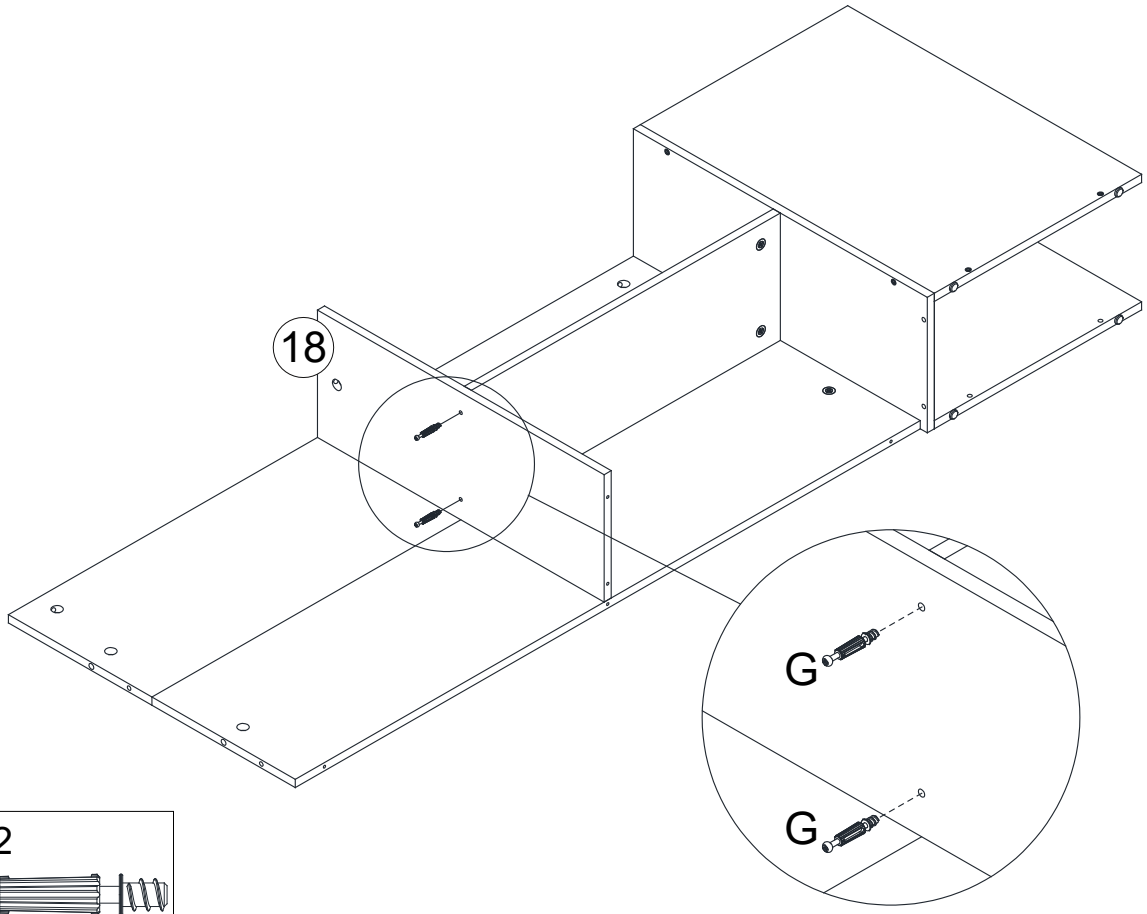

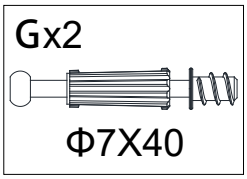

6

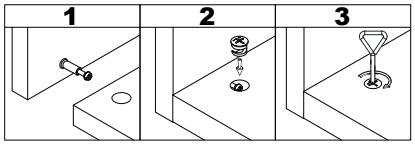

7

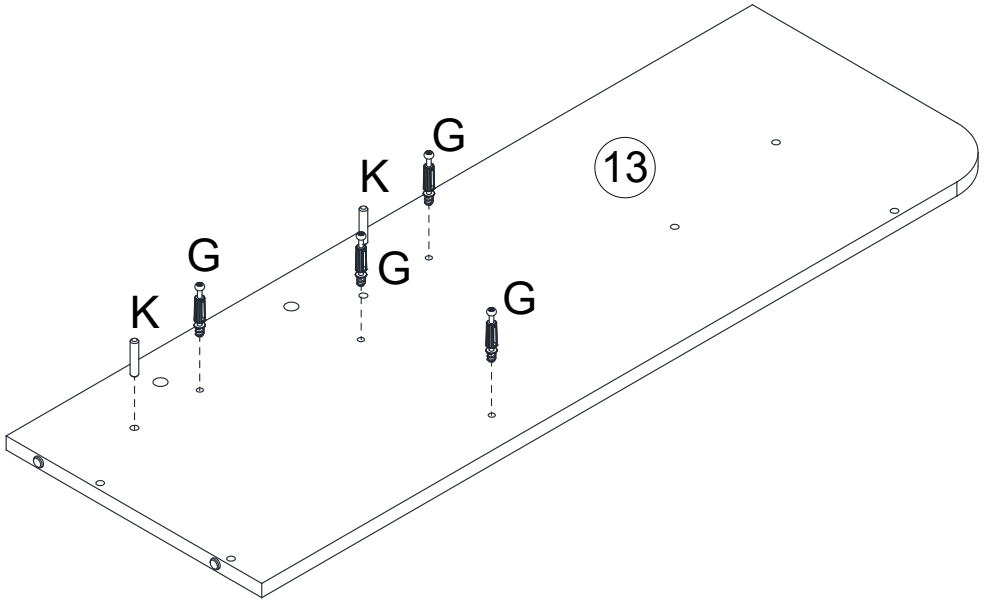

Gx4	Kx2
	
Φ7X40	Φ6X30

8

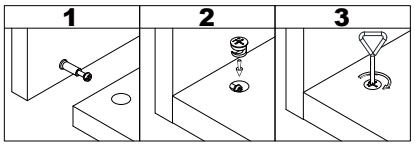

Hx4
Φ15X10

9

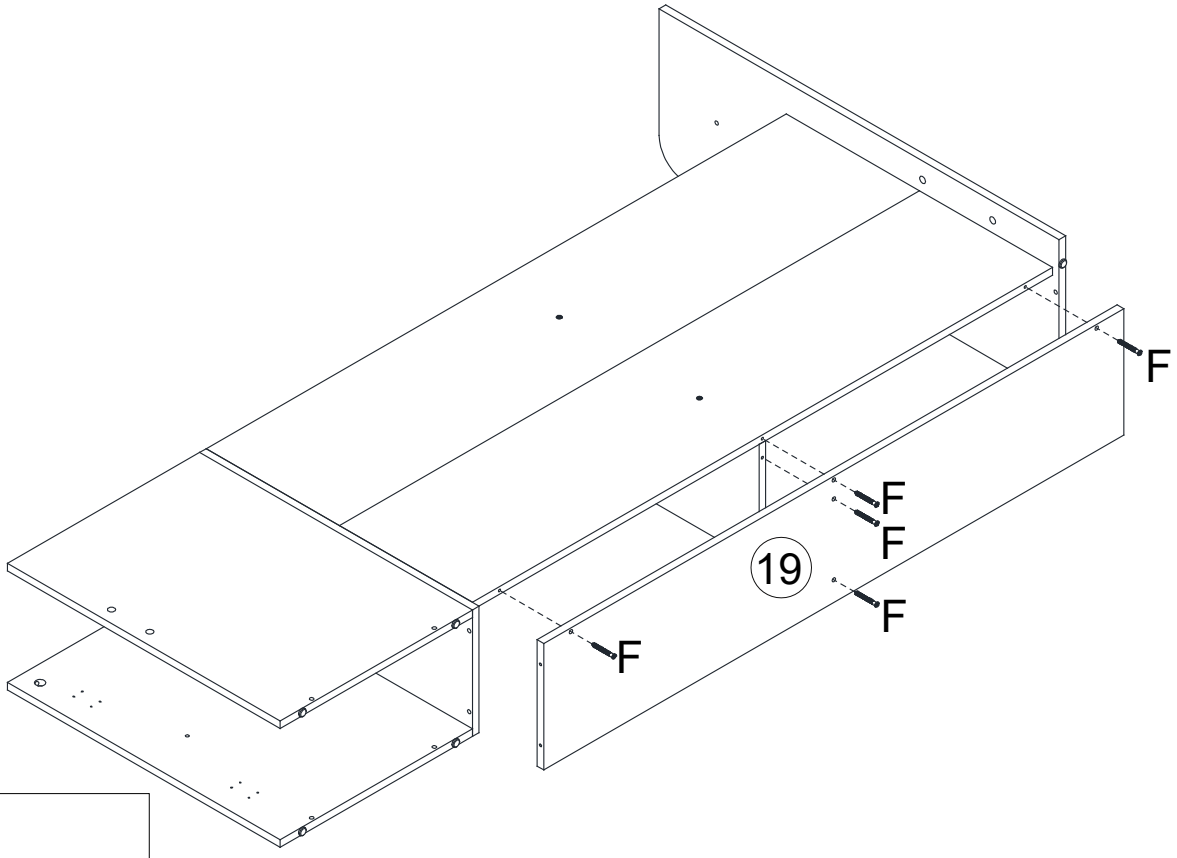

F x5



M5X40

10

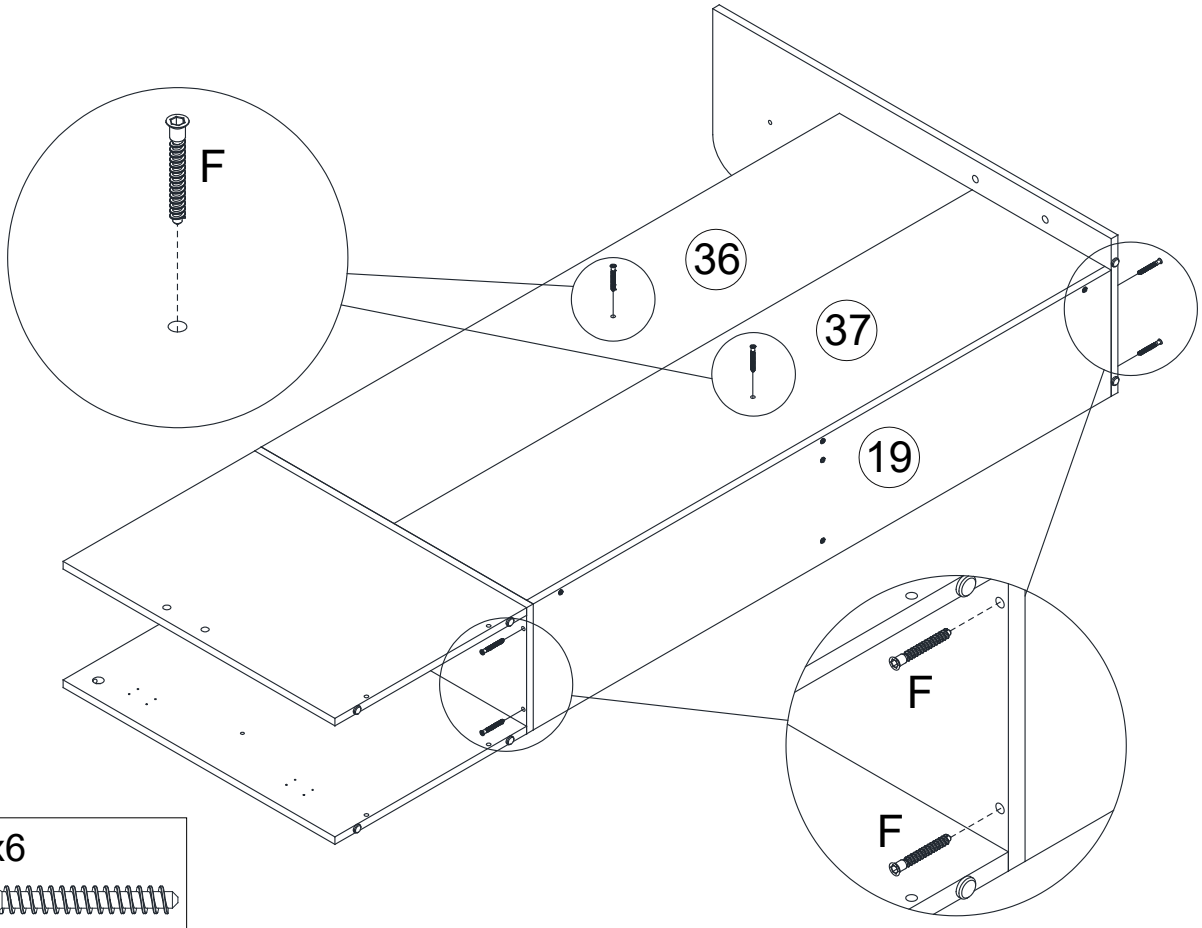

F x6

M5X40

11

During this installation process, if component 32 cannot be inserted, simply loosen the screws here!
Lors de l'installation de cette étape, si le composant 32 ne peut pas être inséré, il suffit de desserrer les vis situées ici!
Bei dieser Schrittinstallation, wenn Bauteil 32 nicht hineinpasst, lösen Sie einfach die Schraube an dieser Stelle!
Durante l'installazione di questo passaggio, se il componente 32 non riesce a inserirsi, basta allentare i viti qui!
En este paso de instalación, si no se puede colocar el componente 32, simplemente afloje los tornillos en esta zona!

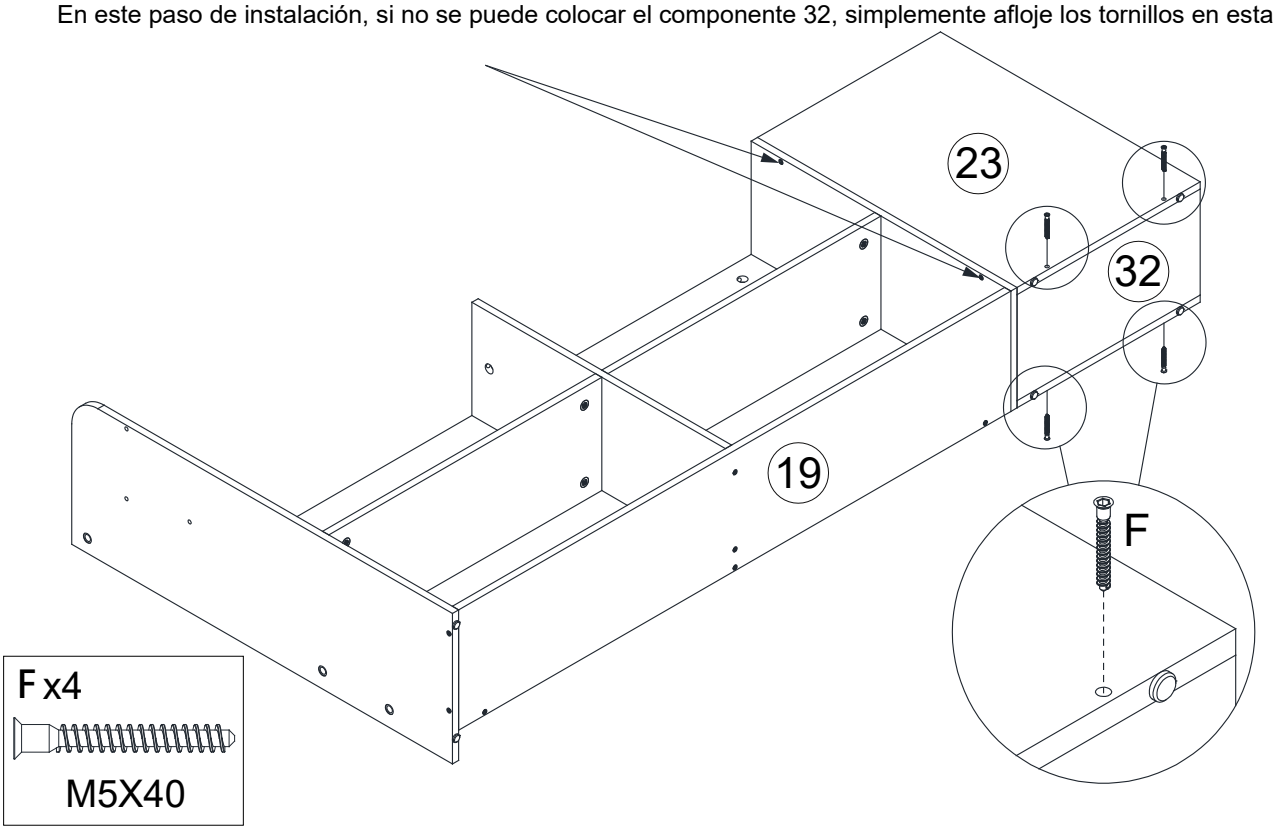

12

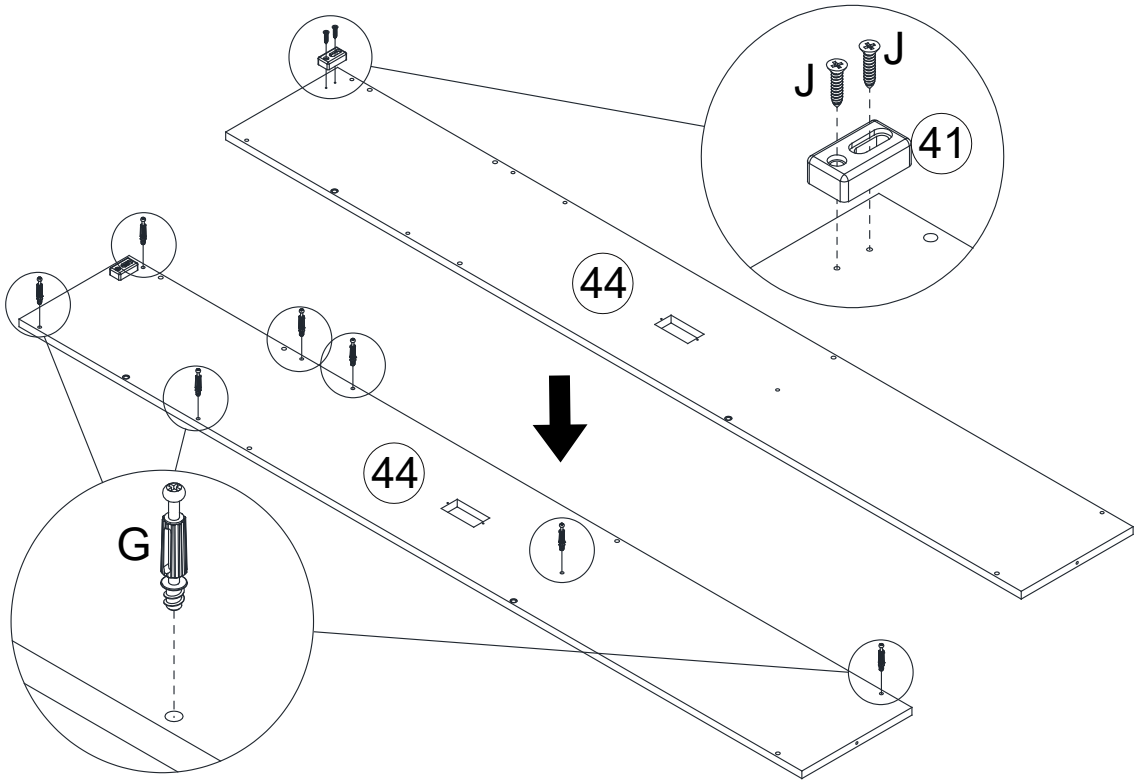

G x7	J x2
Φ7X40	ST4.2X18

13

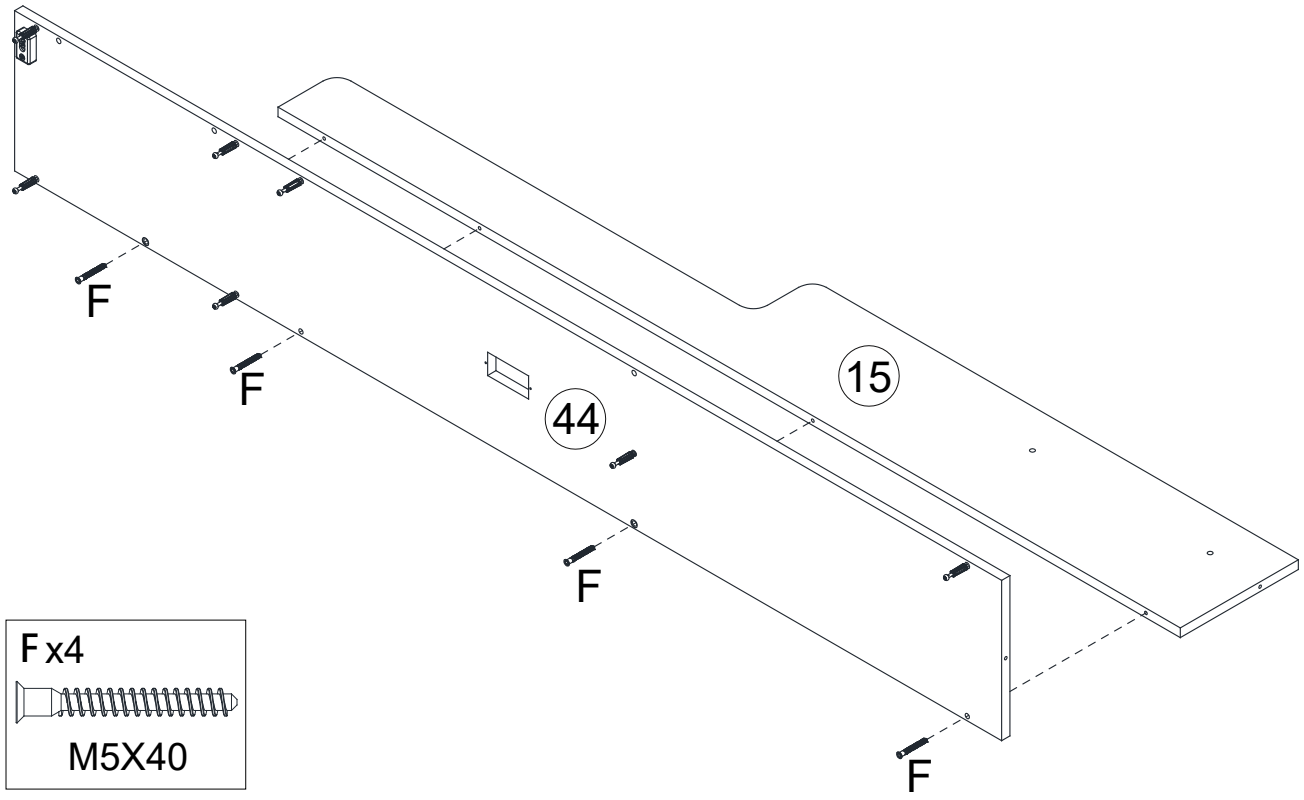

14

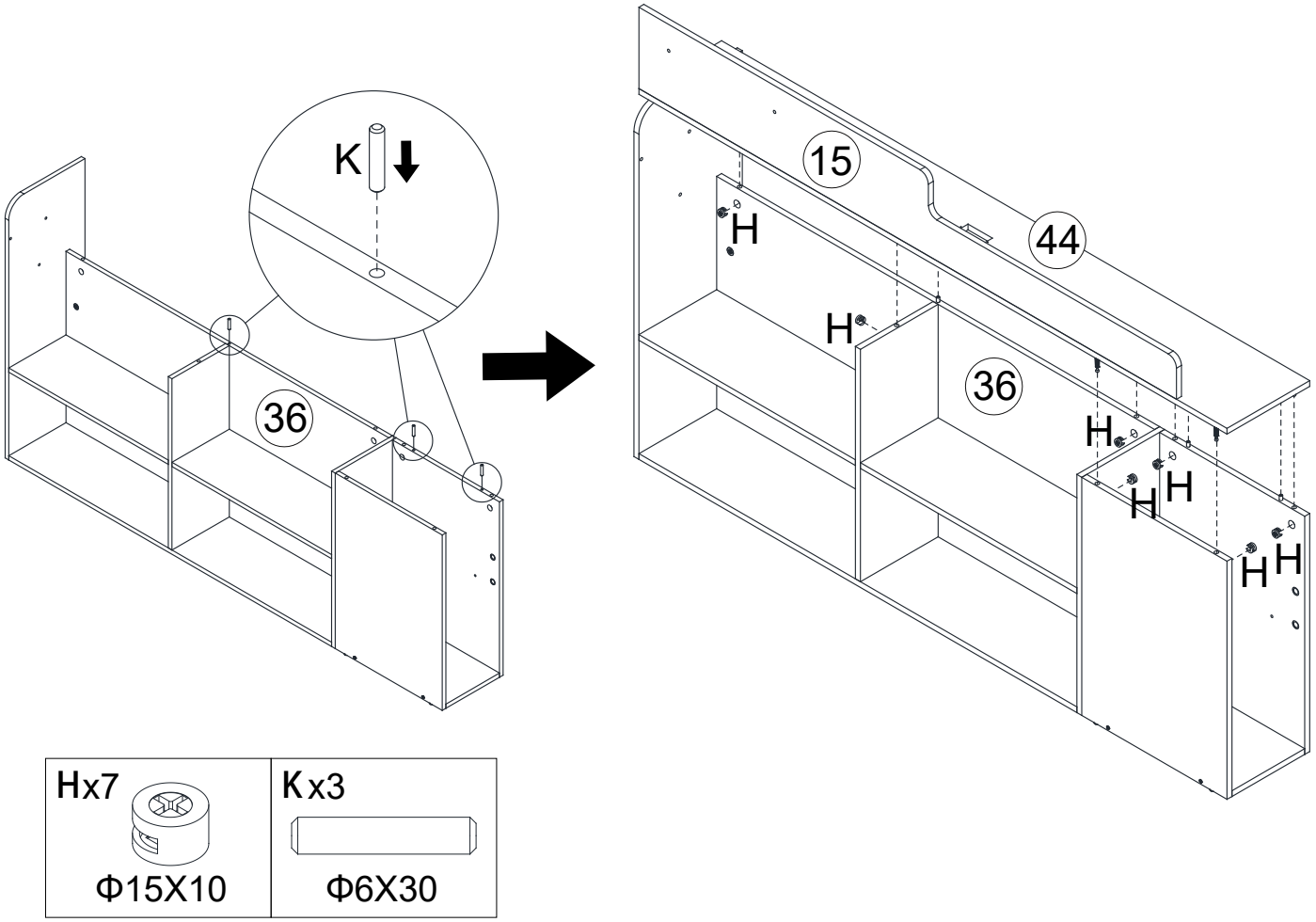

15

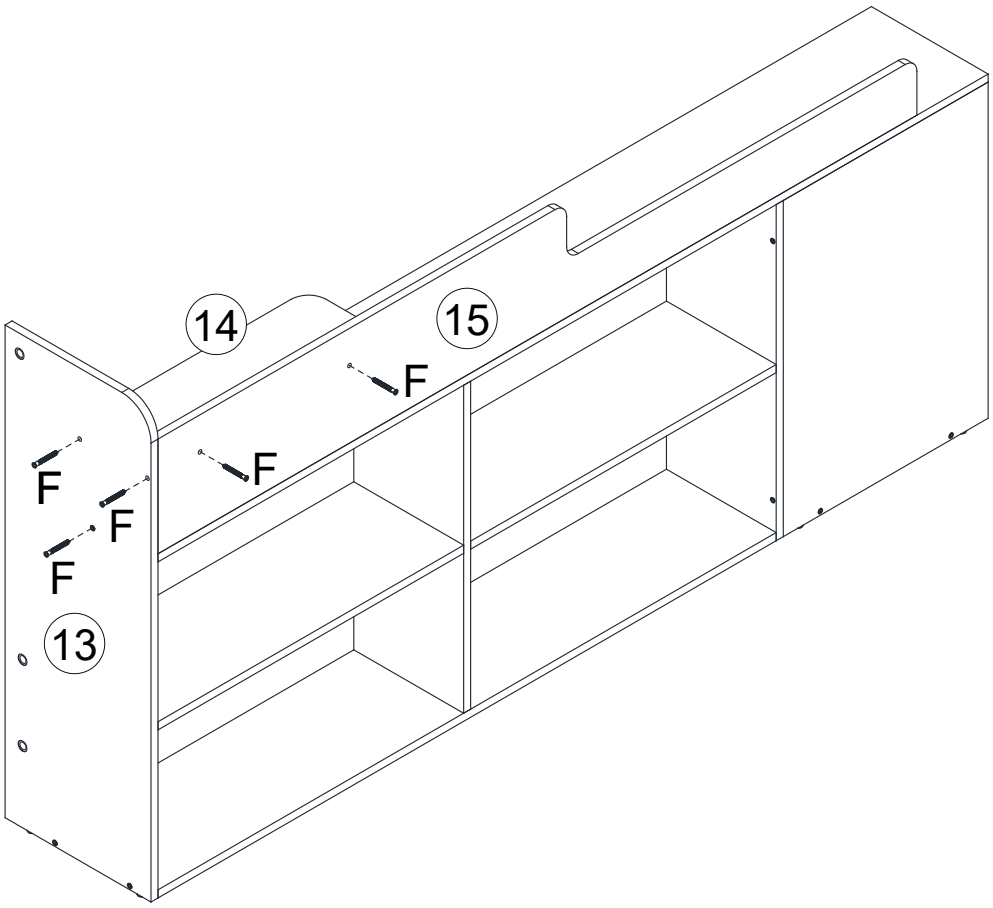

F x5
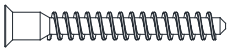
M5X40

16

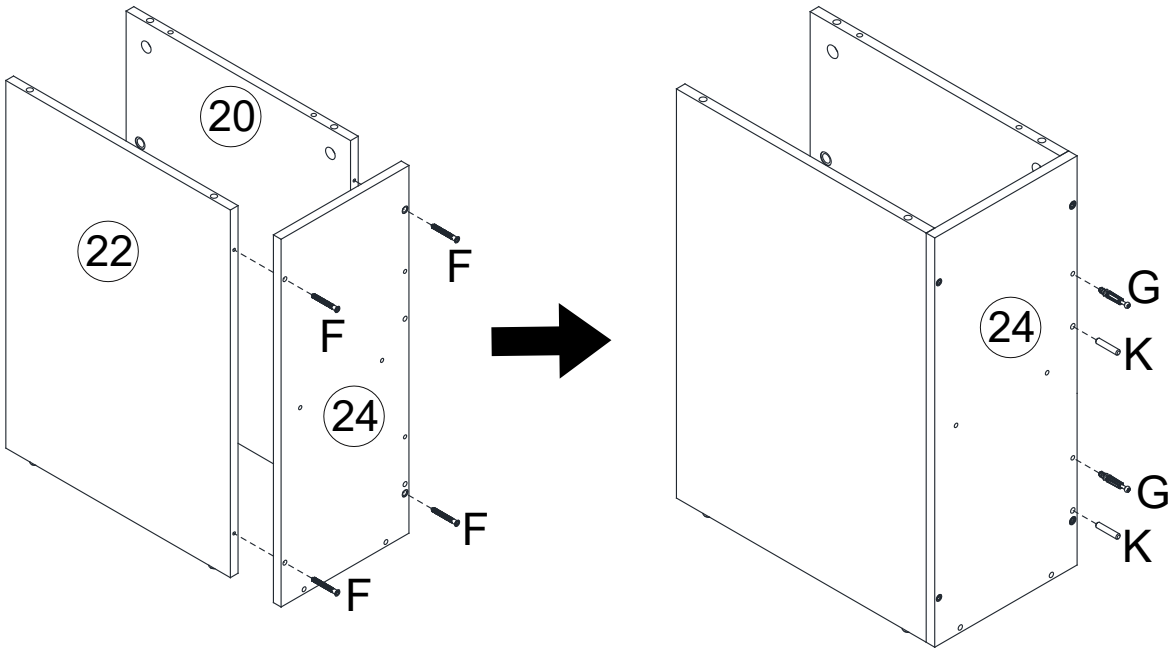

F x4	G x2	K x2
		
M5X40	Φ7X40	Φ6X30

17

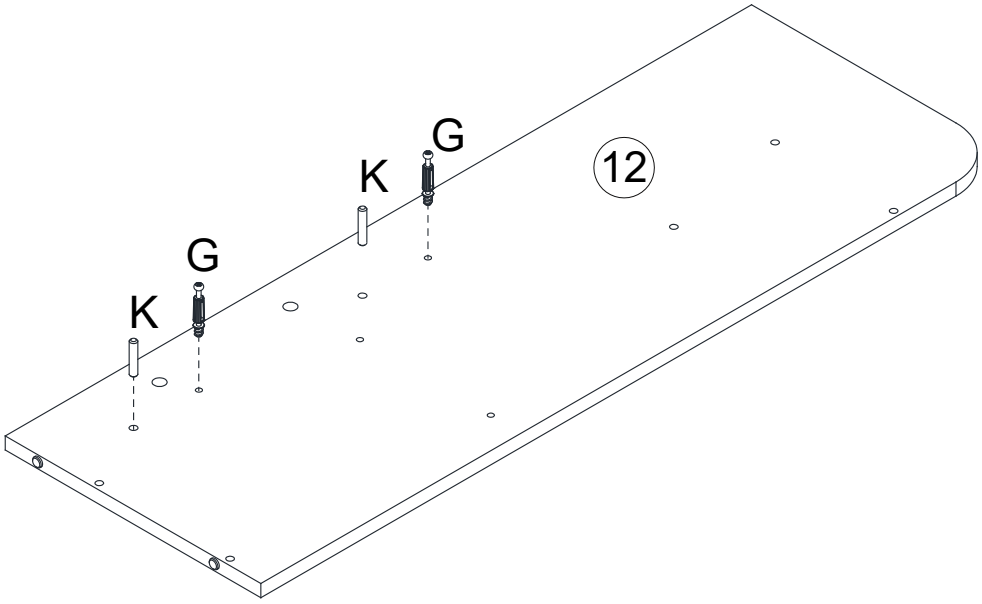

Gx2	Kx2
	
Φ7X40	Φ6X30

18

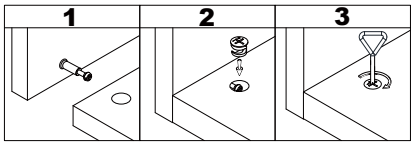

Hx4

Φ15X10

19

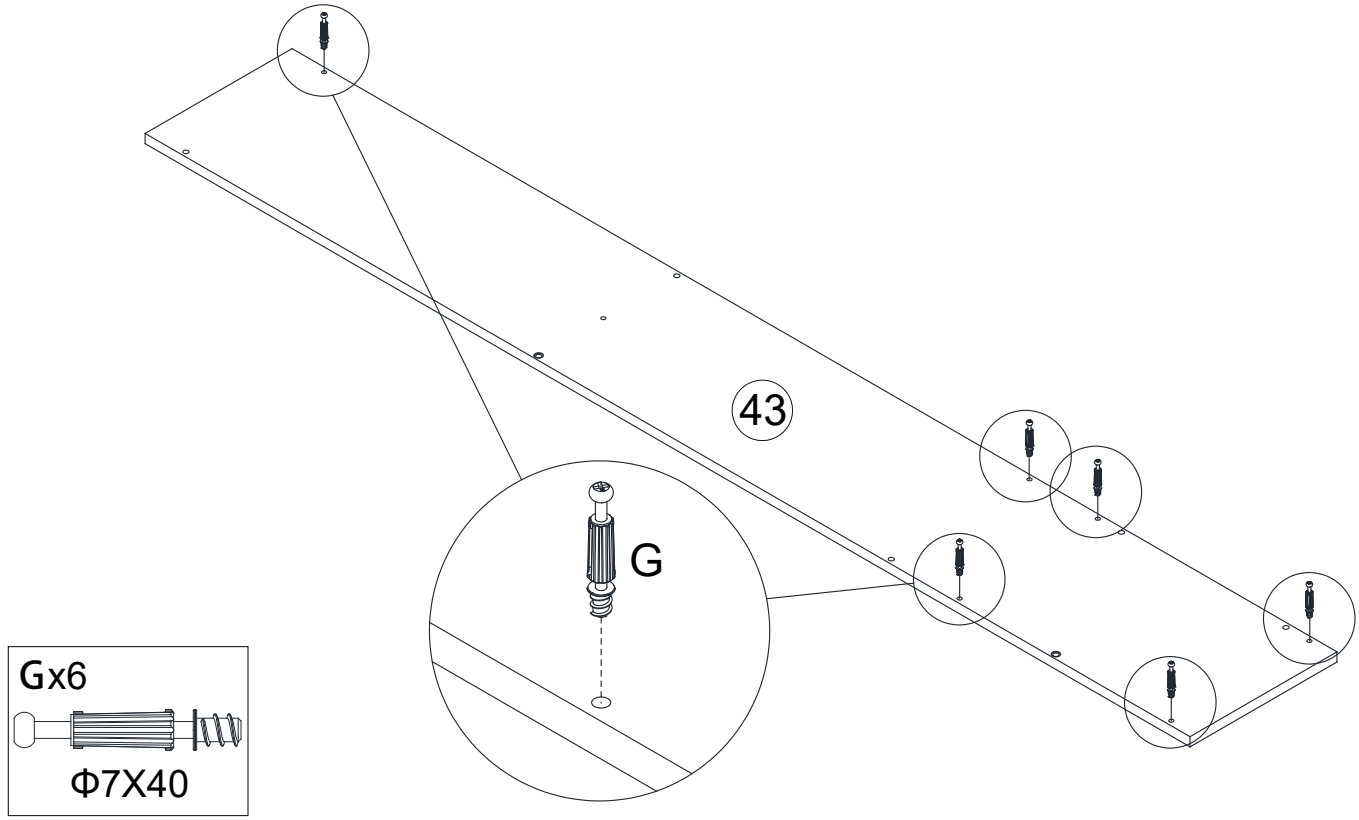

20

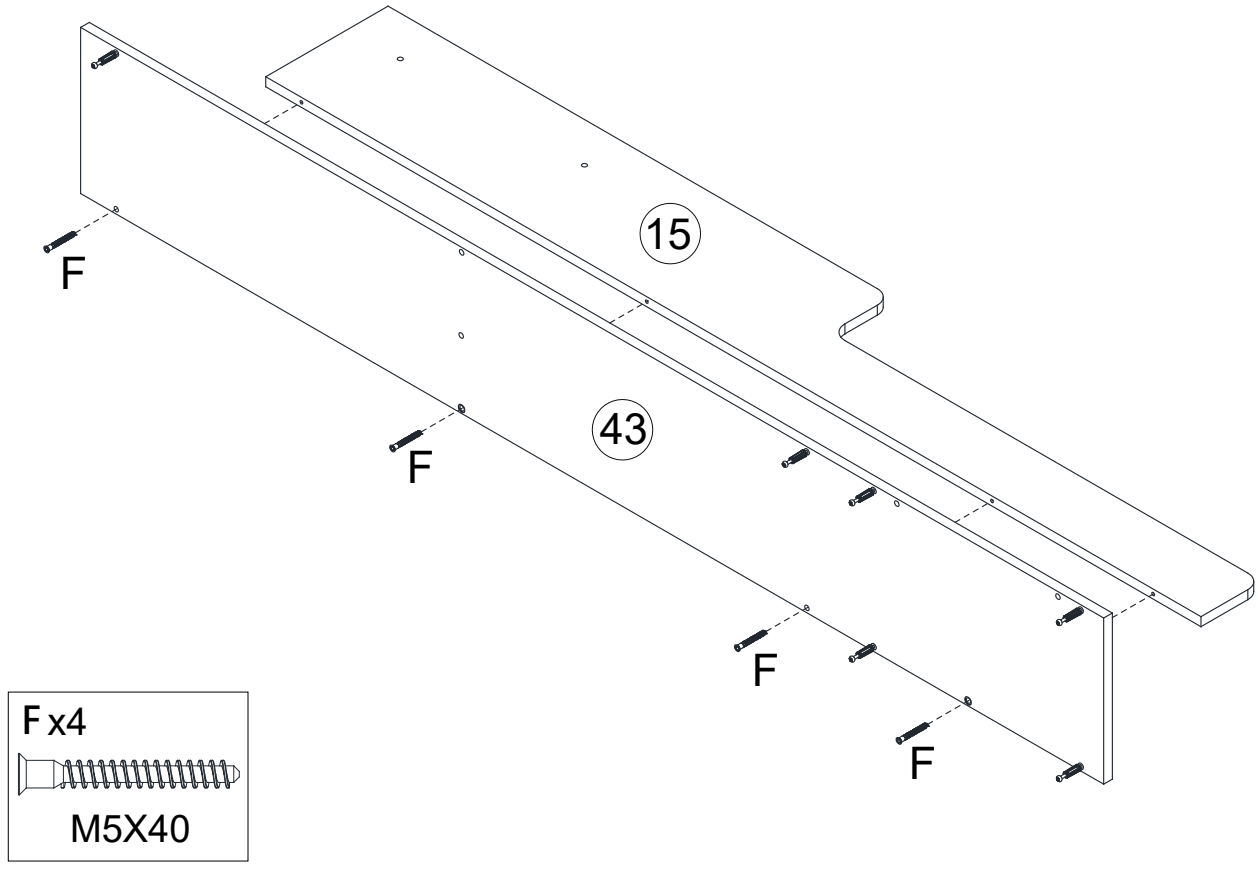

21

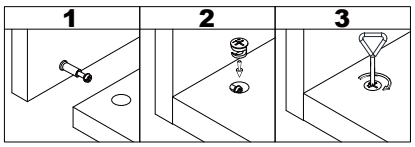

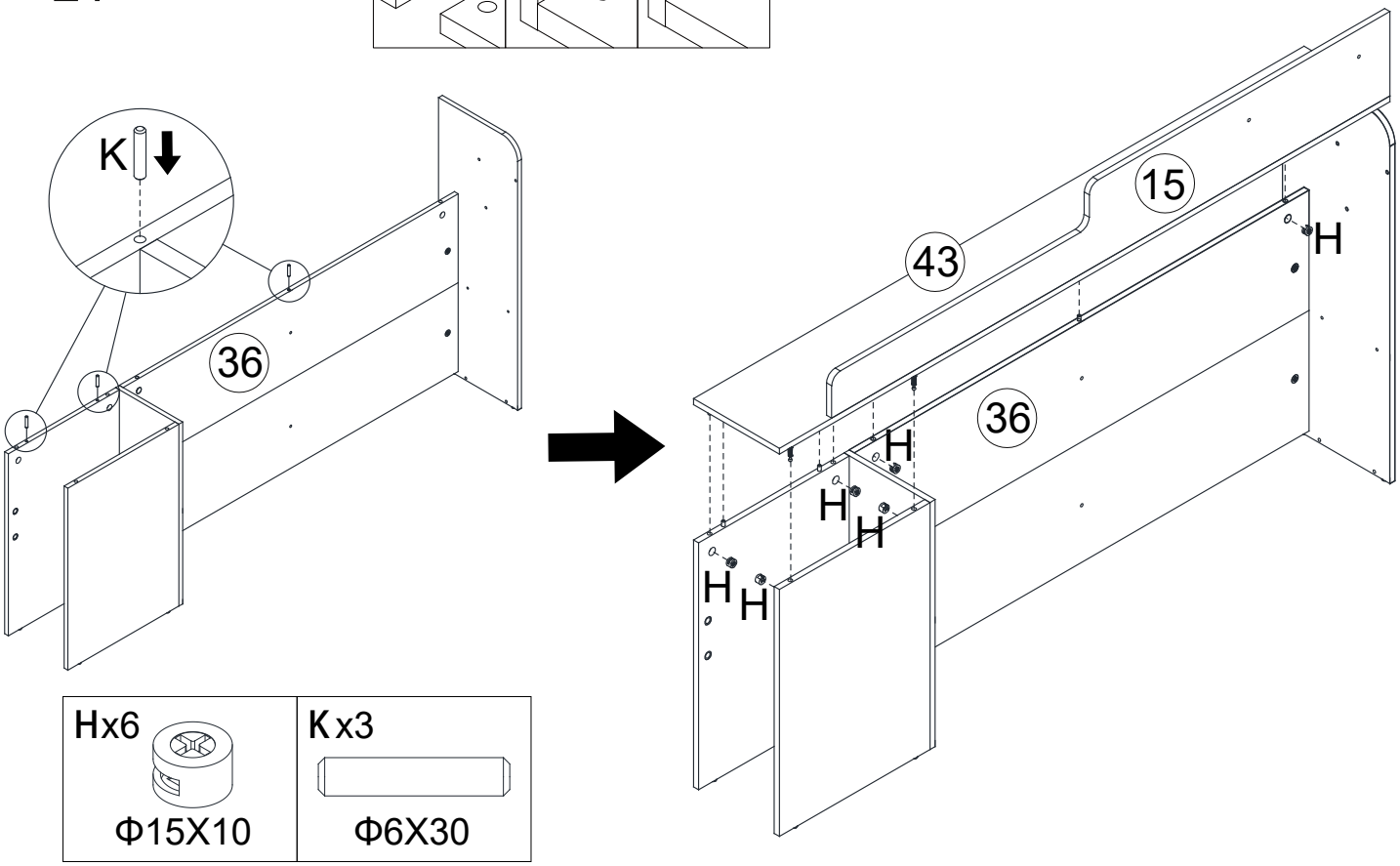

Hx6	Kx3
Φ15X10	Φ6X30

22

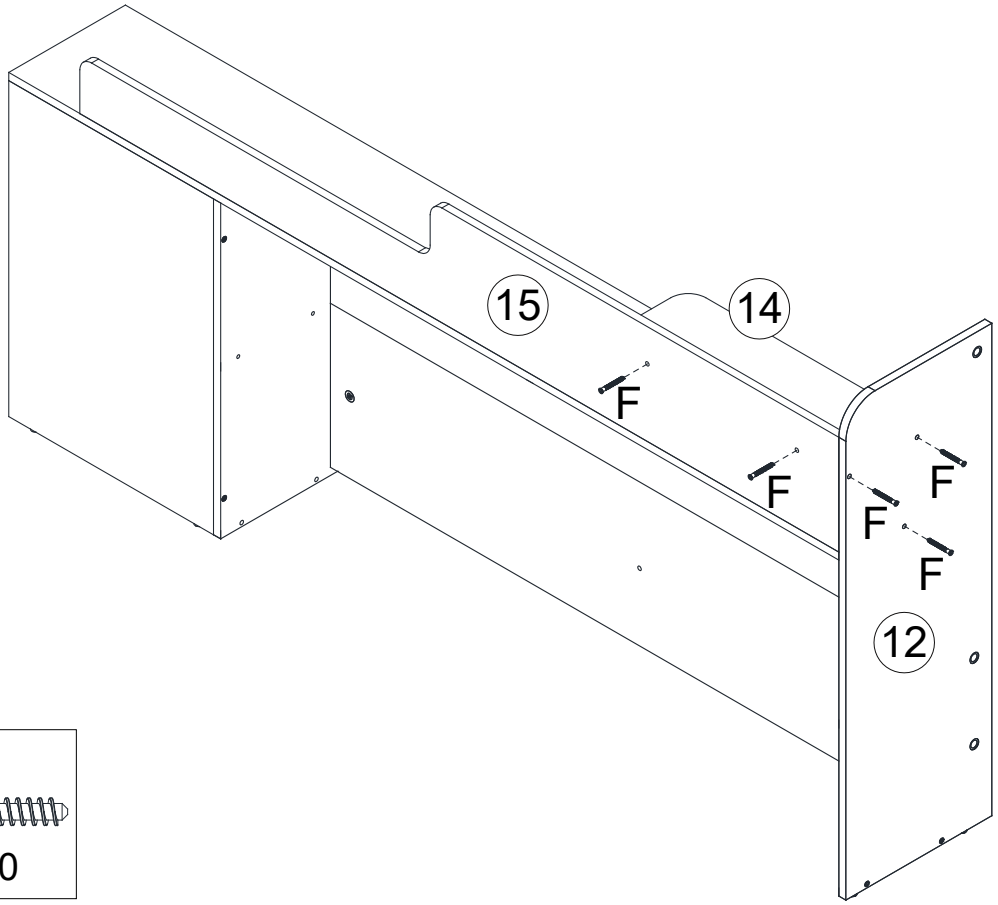

Fx5
M5X40

23

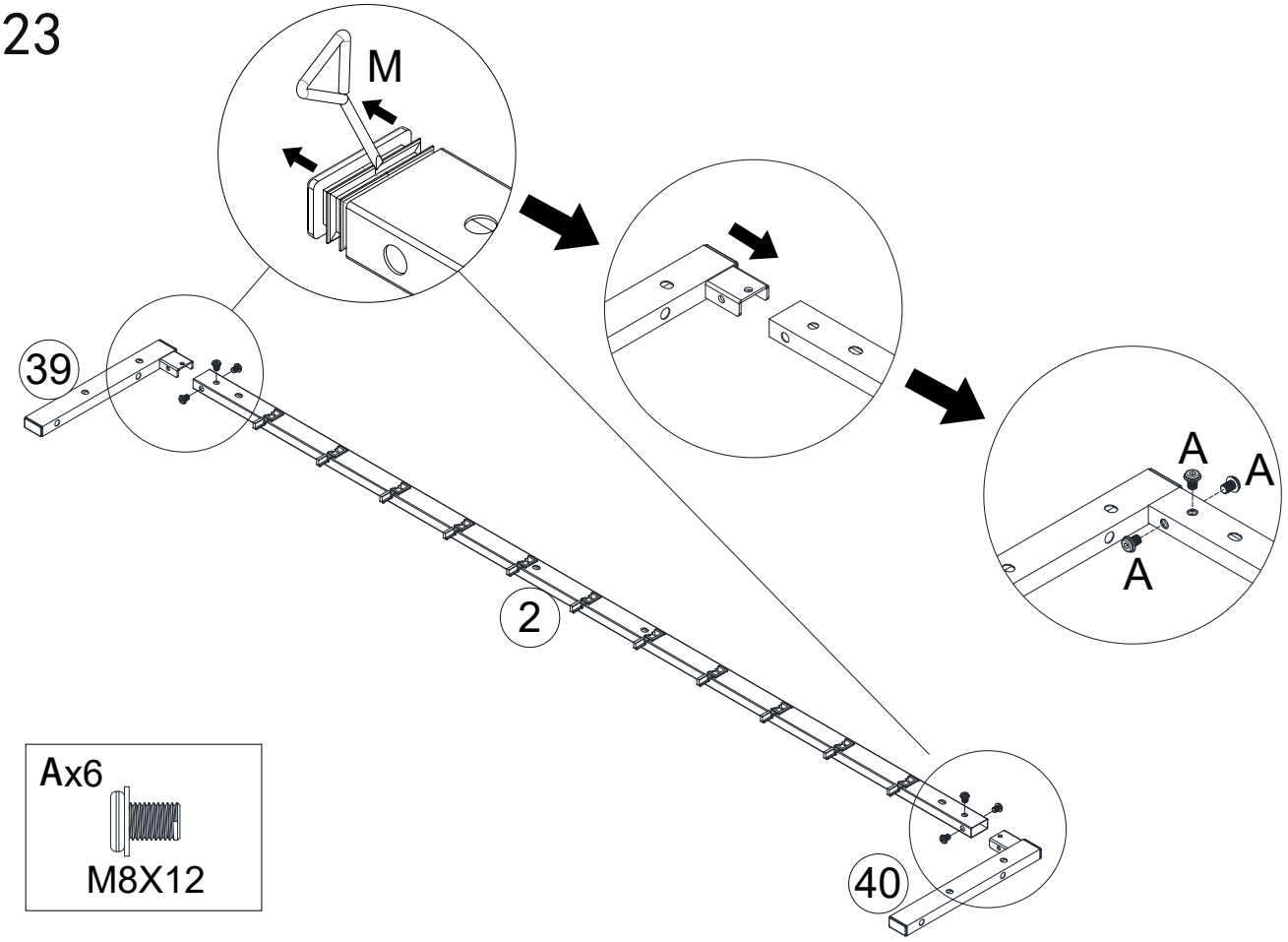
M
39
2
A
A
A
40

Ax6
M8X12

24

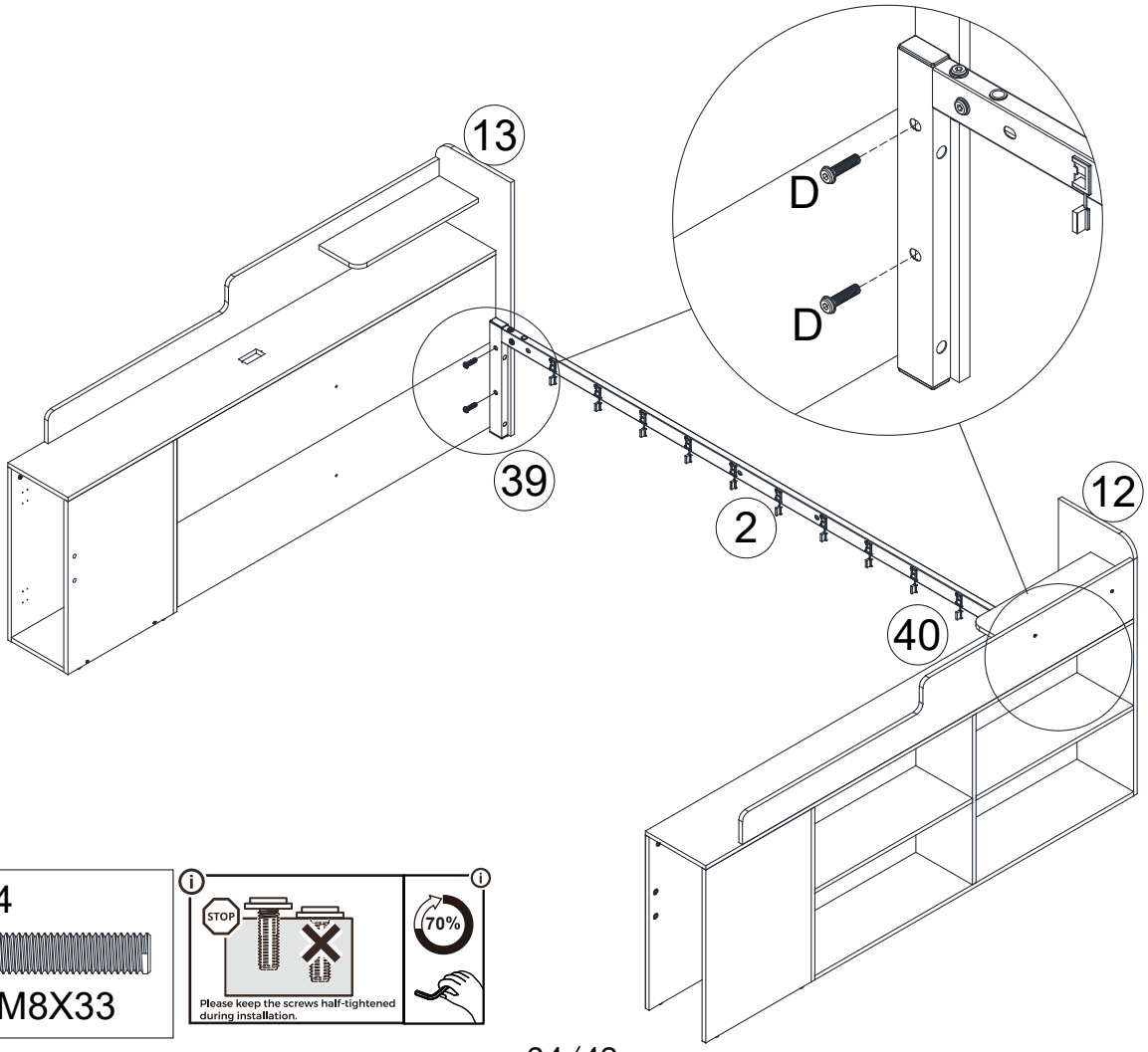
13
D
D
39
2
12
40

Dx4
M8X33

STOP
70%
Please keep the screws half-tightened during installation.

25

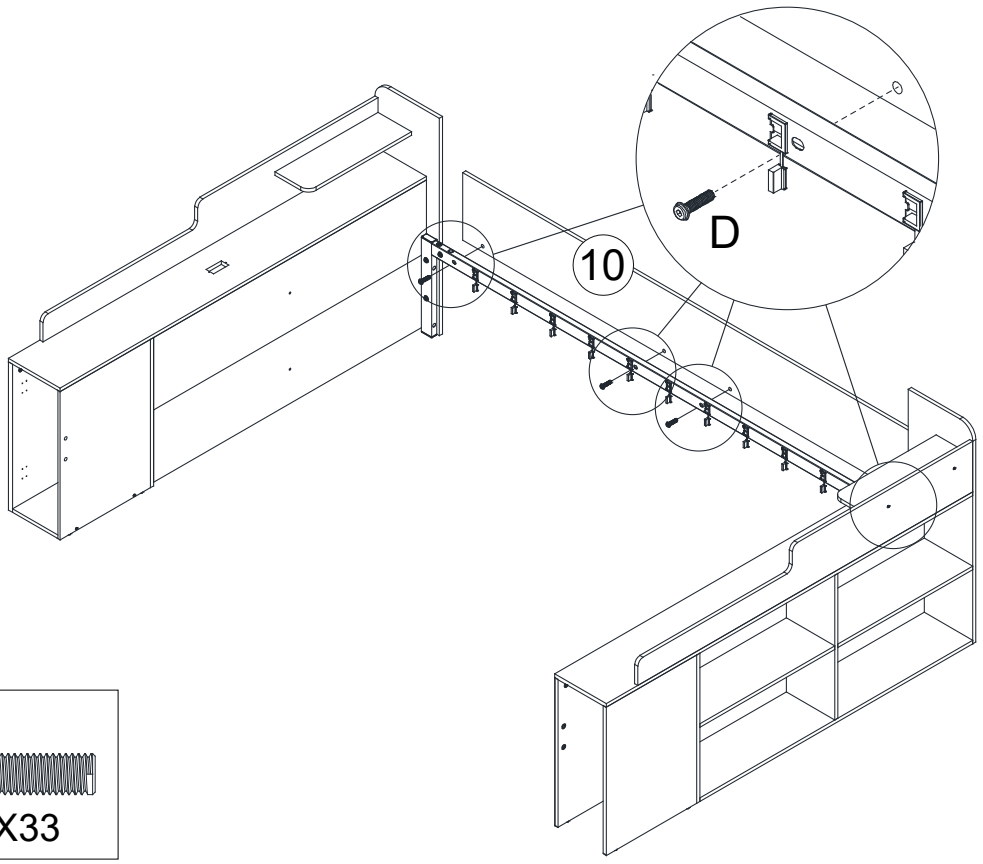

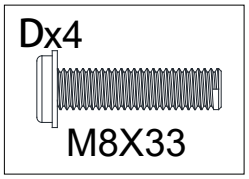

26

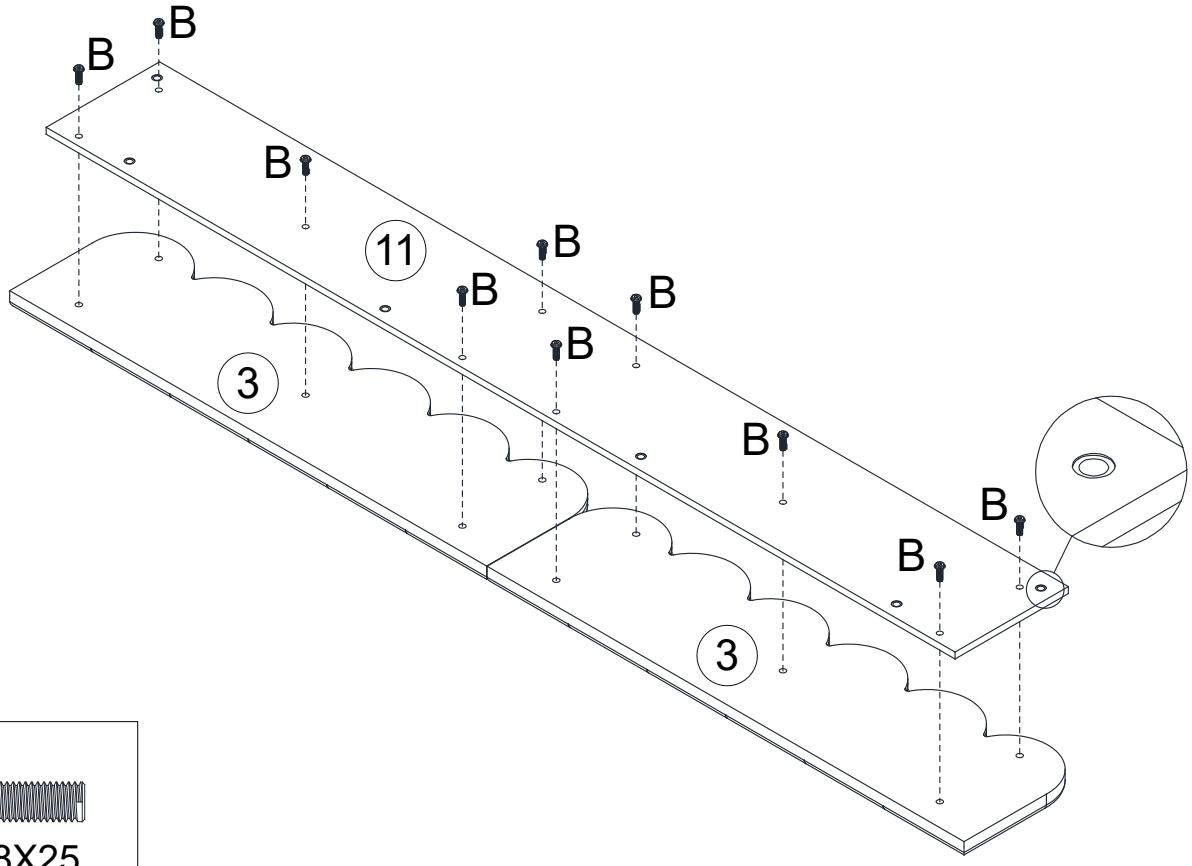

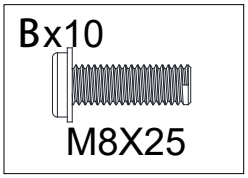

27

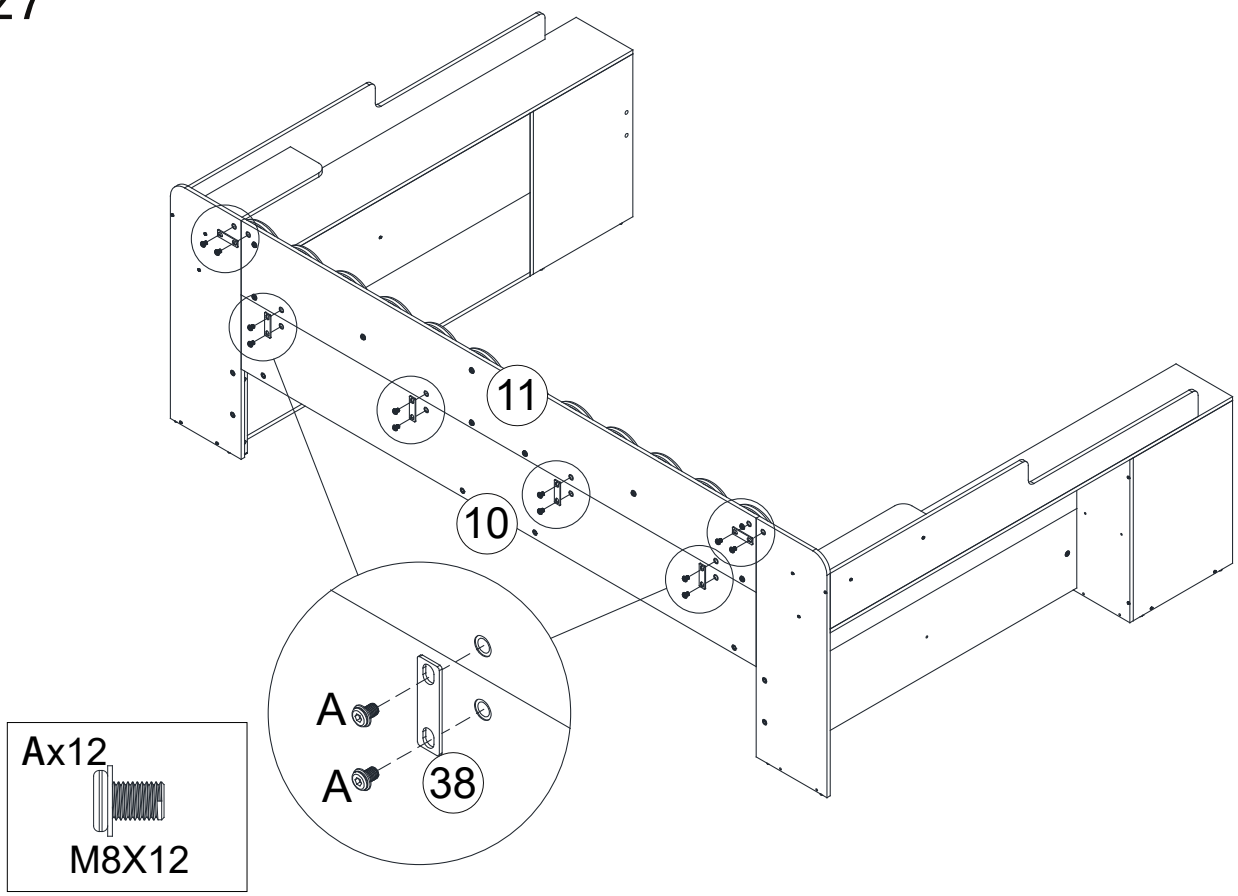
11
10
A
A
38
Ax12
M8X12

28

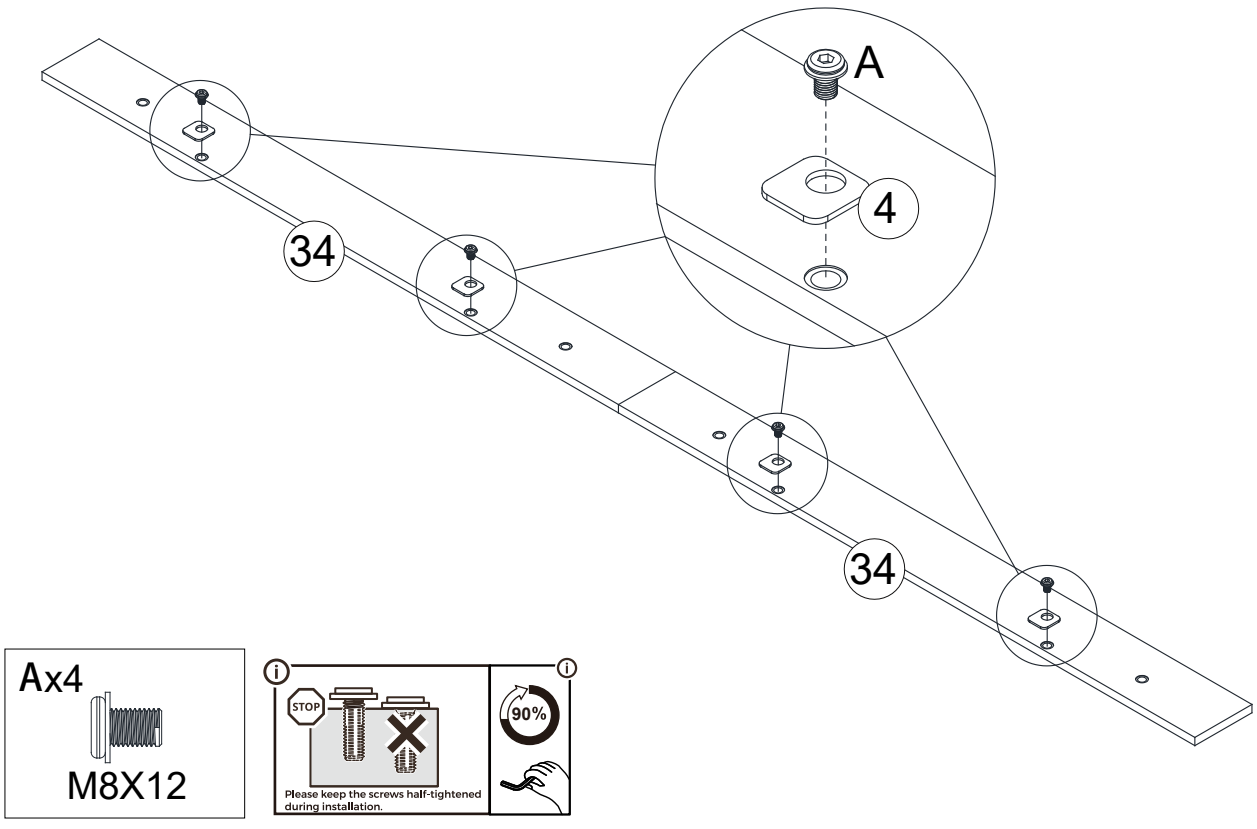
A
4
34
34
Ax4
M8X12
STOP
90%
Please keep the screws half-tightened during installation.

29

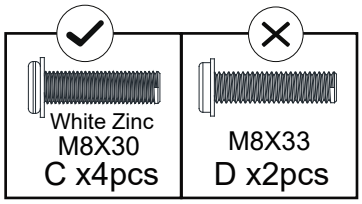
White Zinc
M8X30
C x4pcs
M8X33
D x2pcs

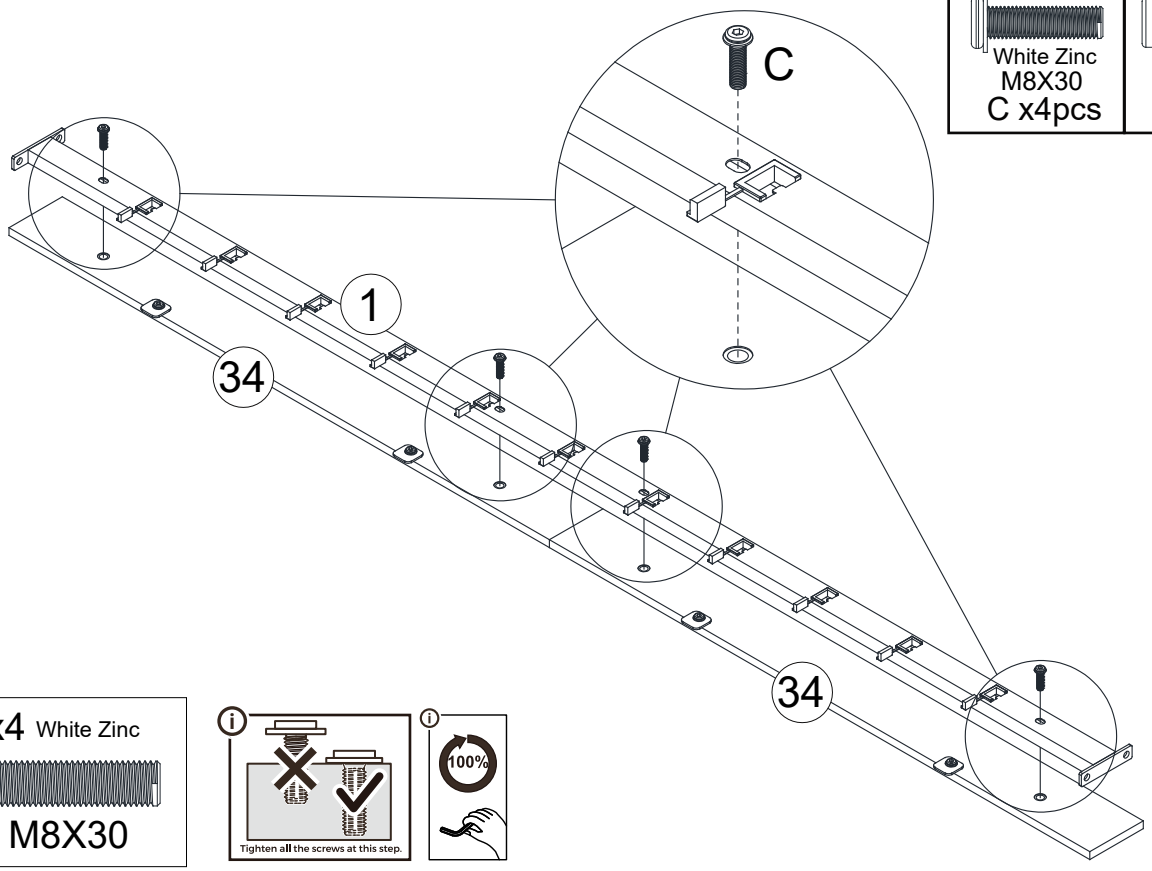
C
1
34
34

Cx4 White Zinc
M8X30

Tighten all the screws at this step.

100%

30

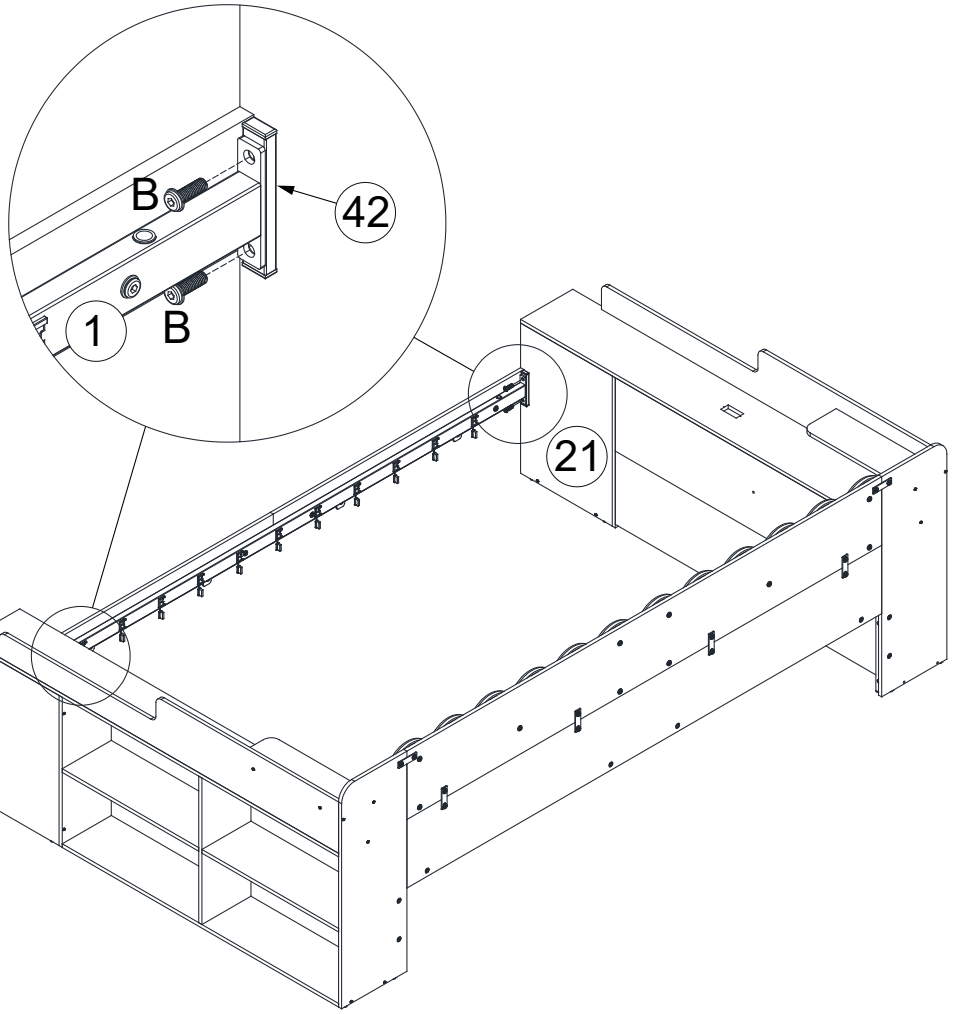
B
42
1
B
21

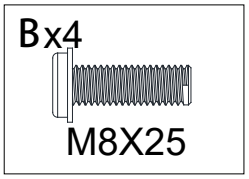
Bx4
M8X25

31

x2

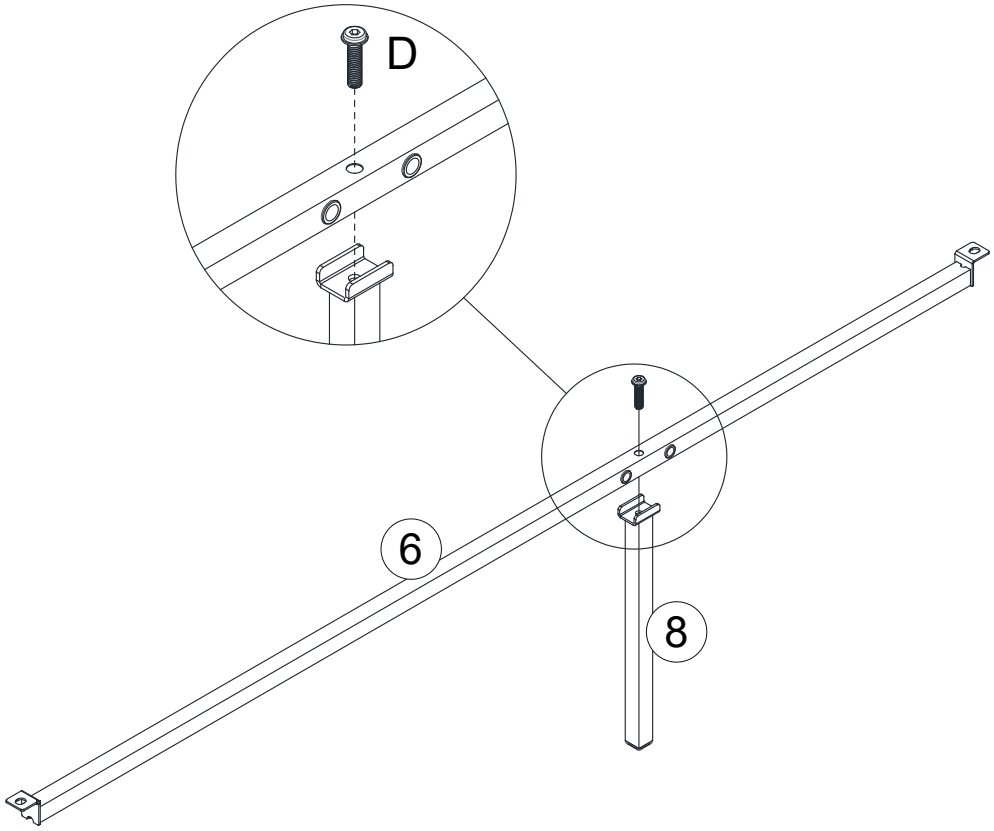

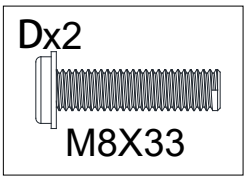

32

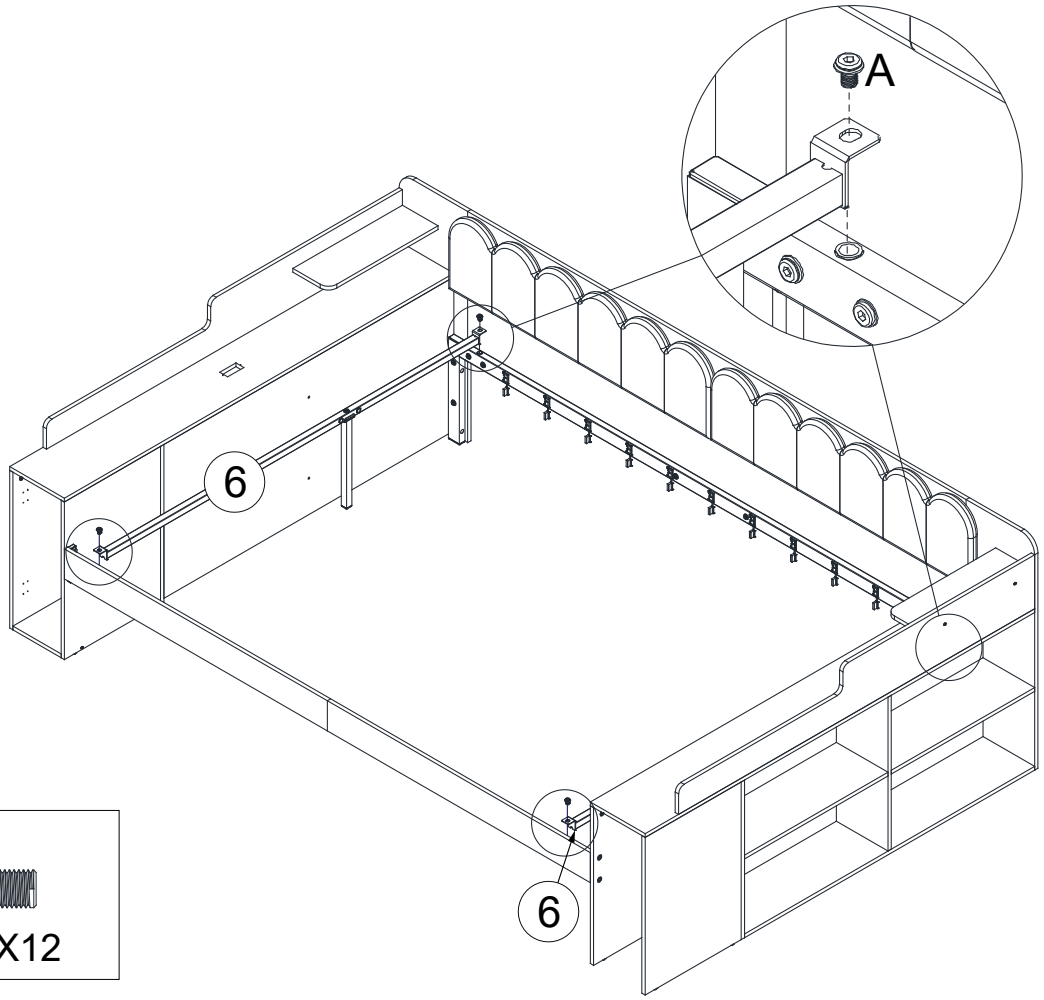

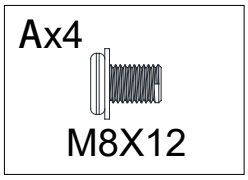

33

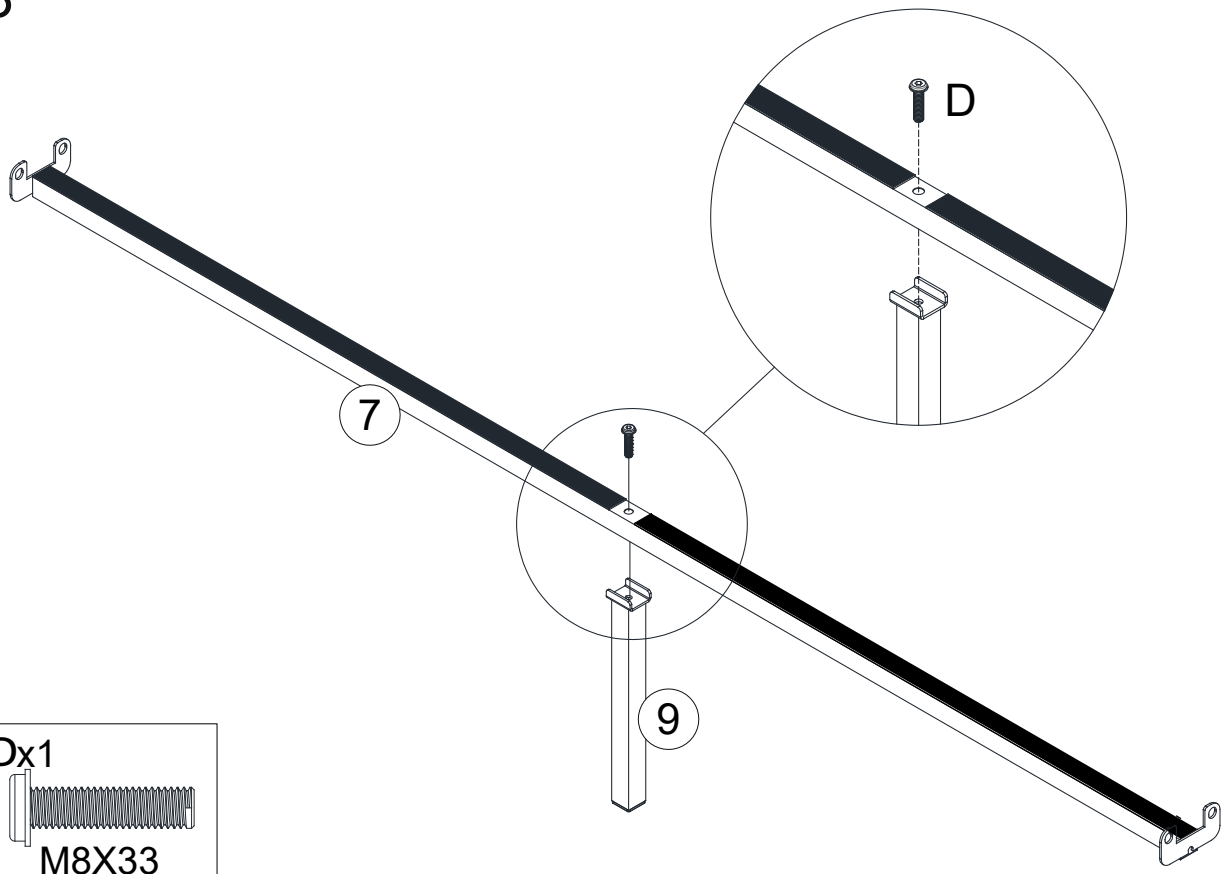

34

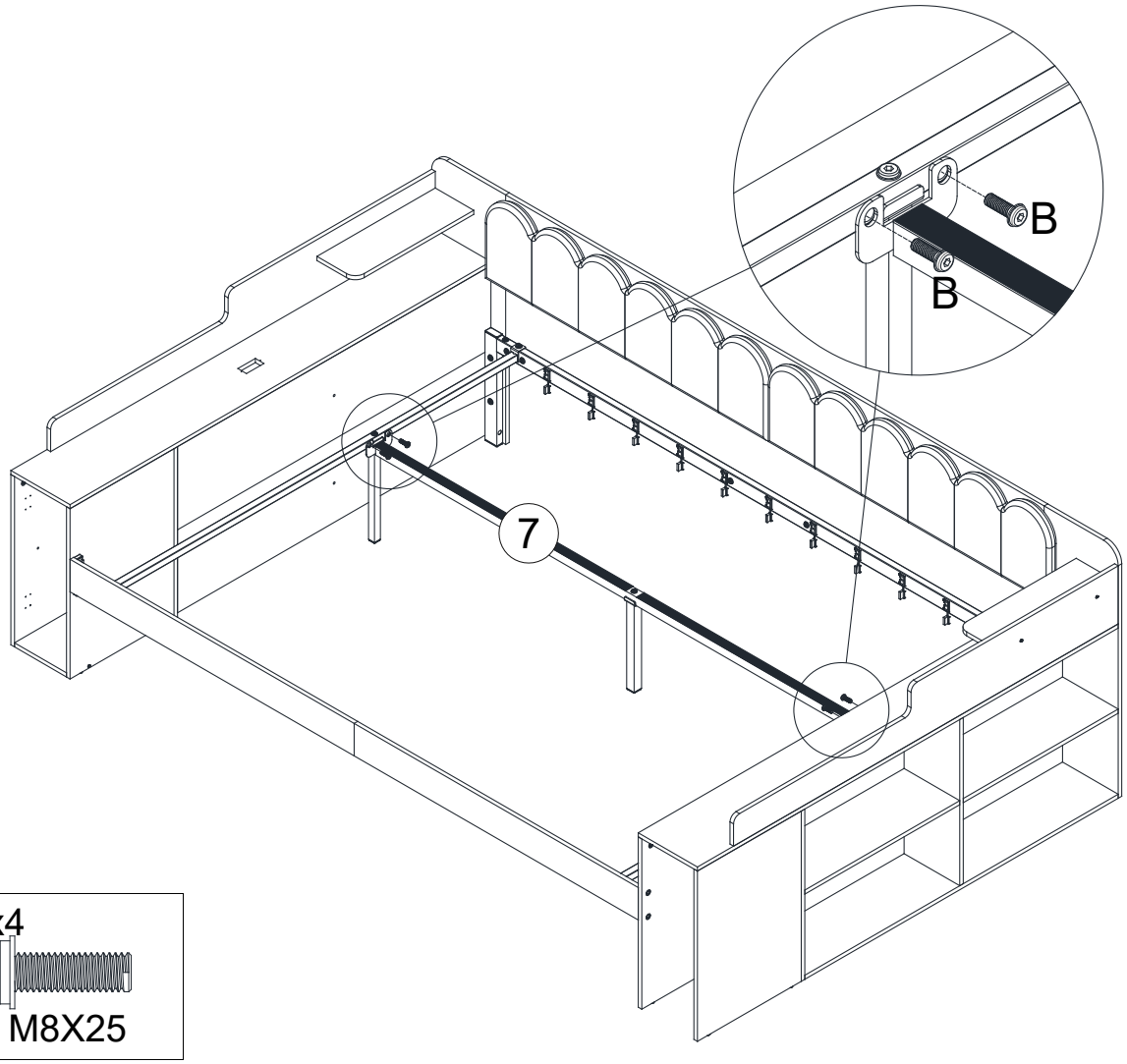

NOTE: Please push to the bottom.

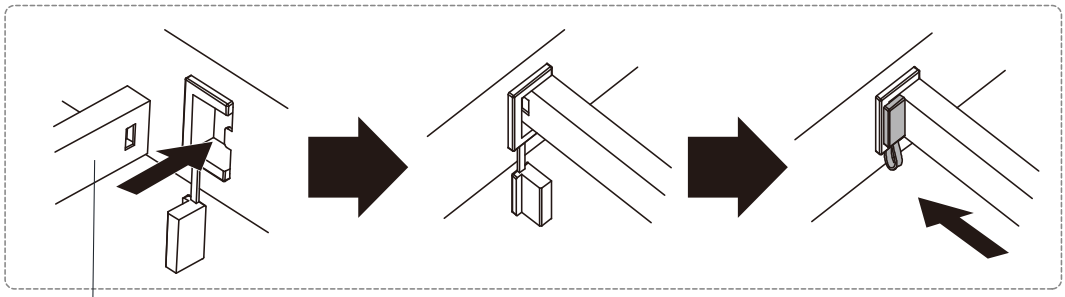

5x11

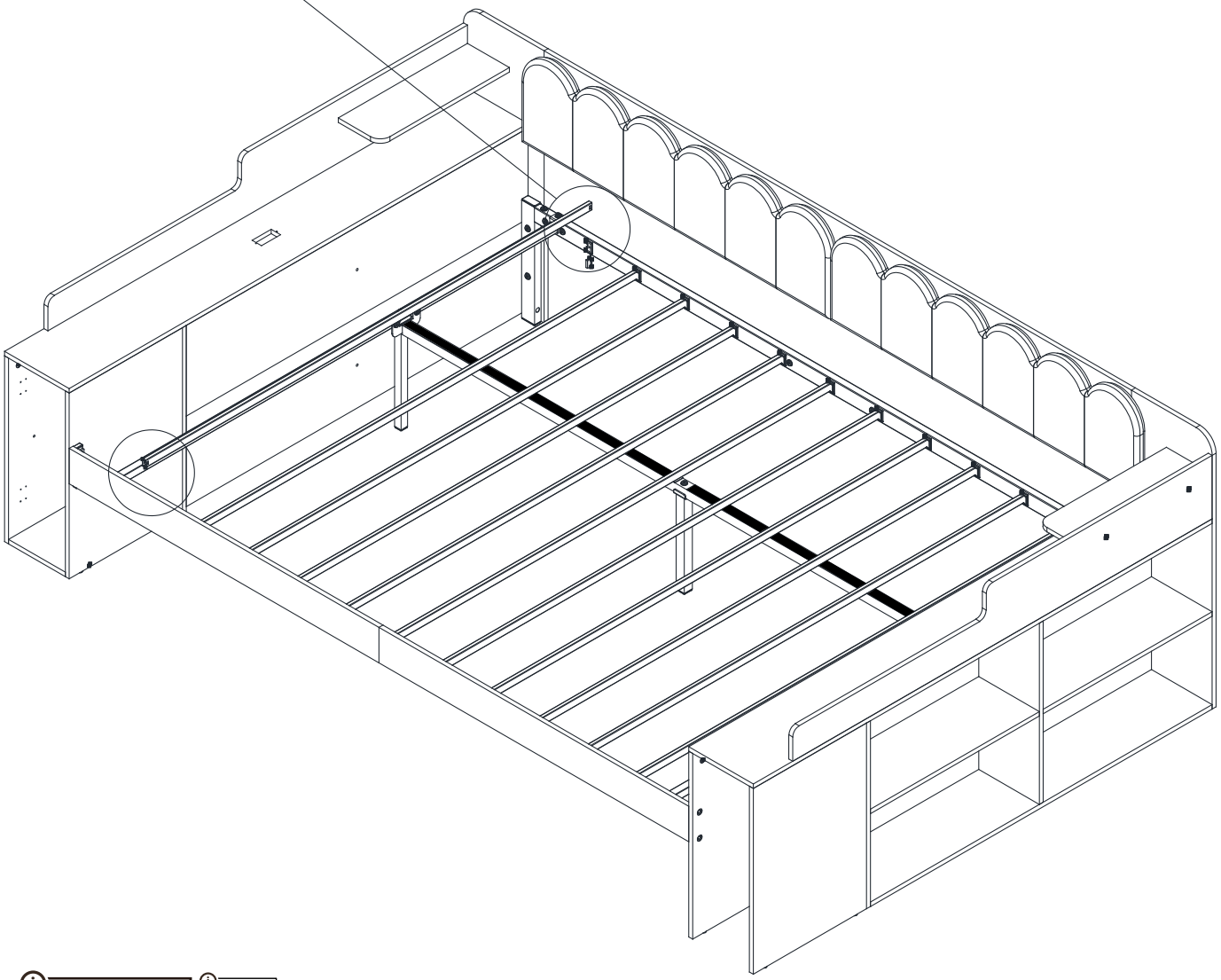

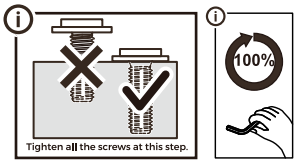

36

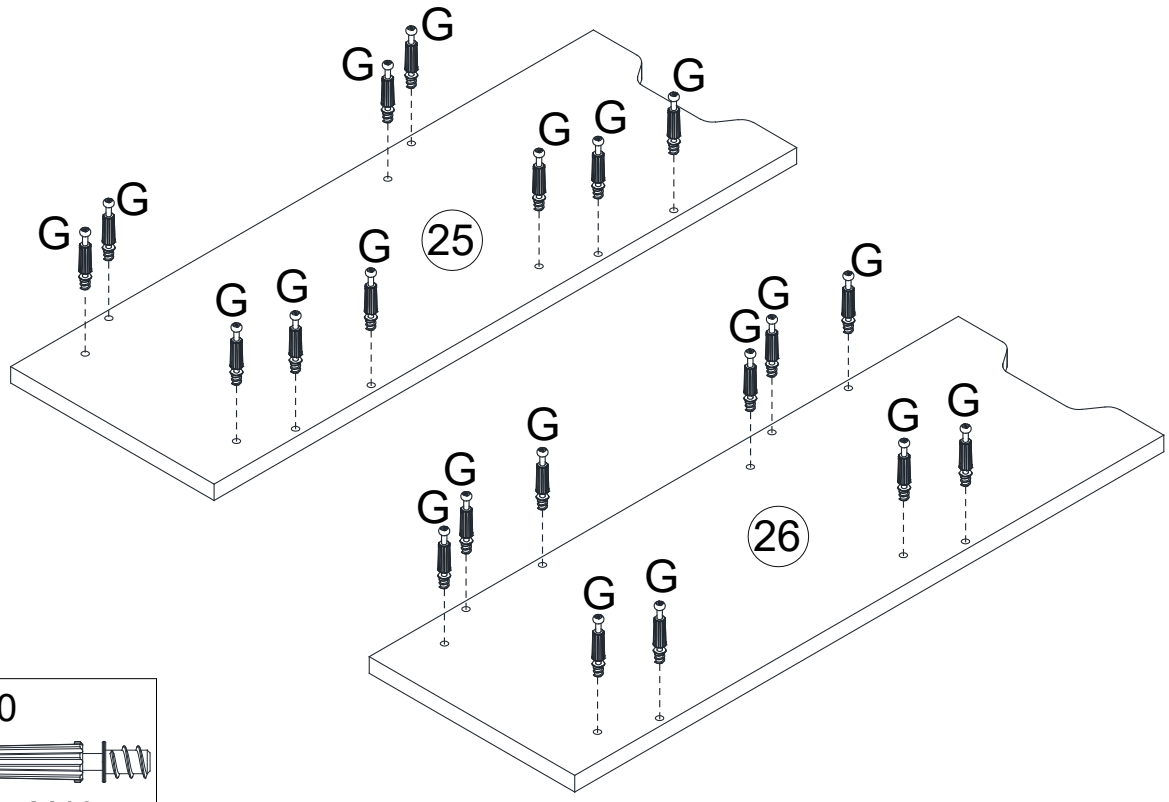

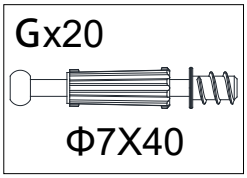

37

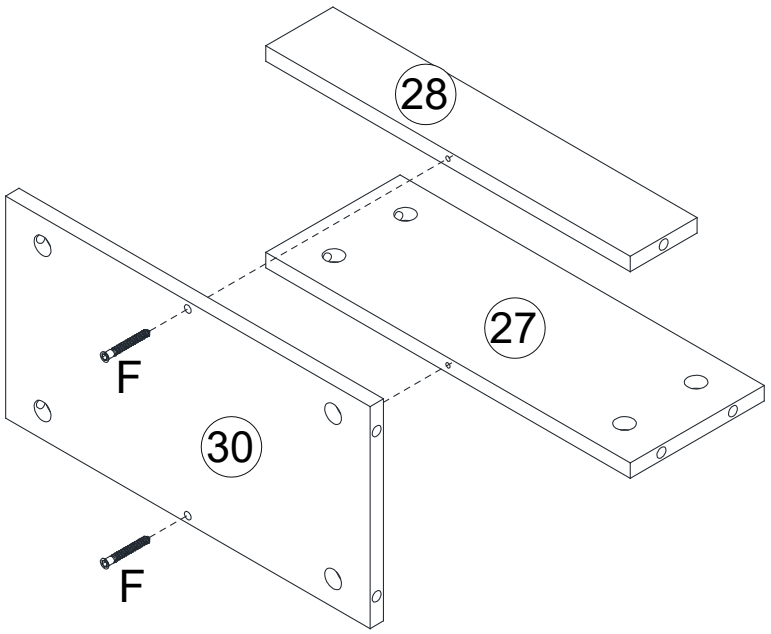

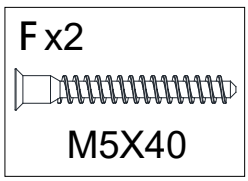

38

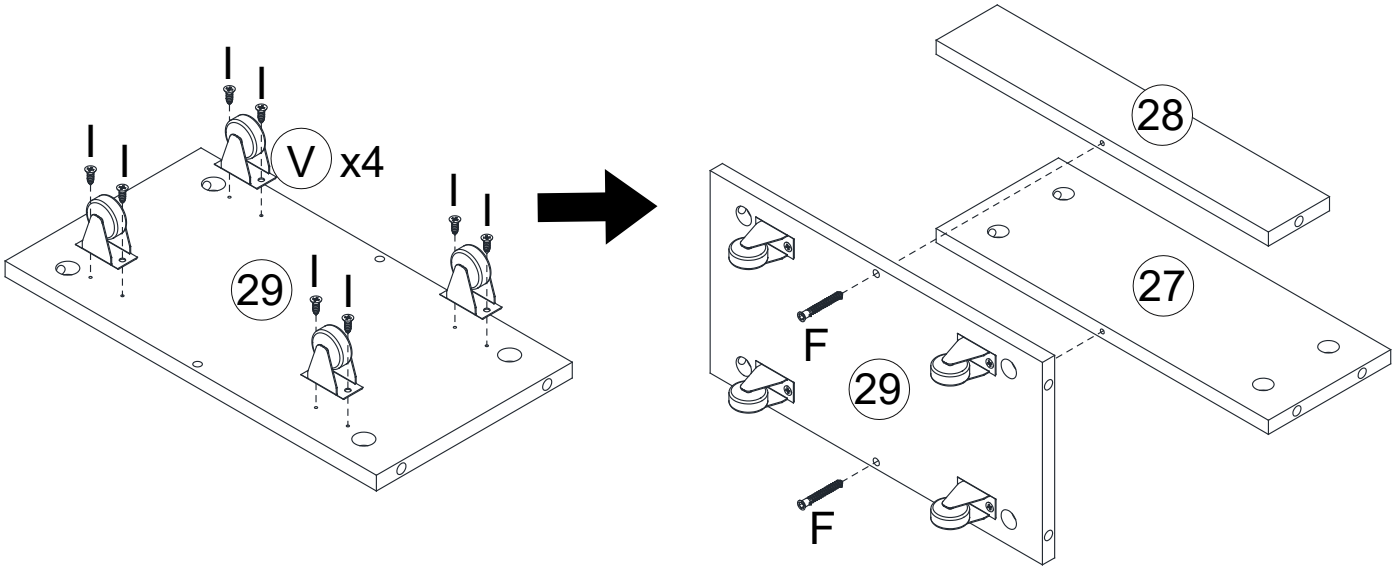

F x2	I x8
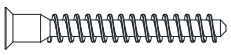	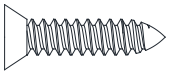
M5X40	ST4.2X12

39

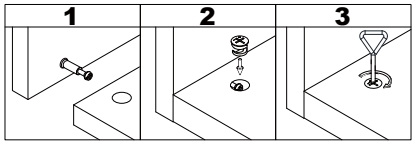

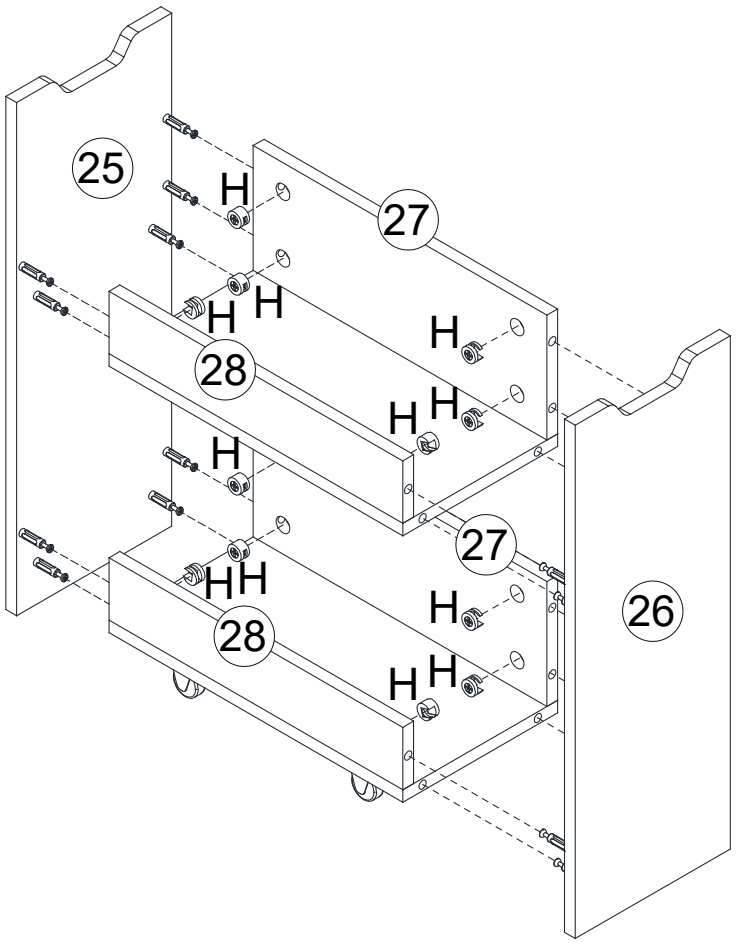

H x12
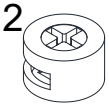
Φ15X10

40

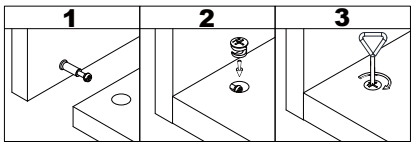
1
2
3

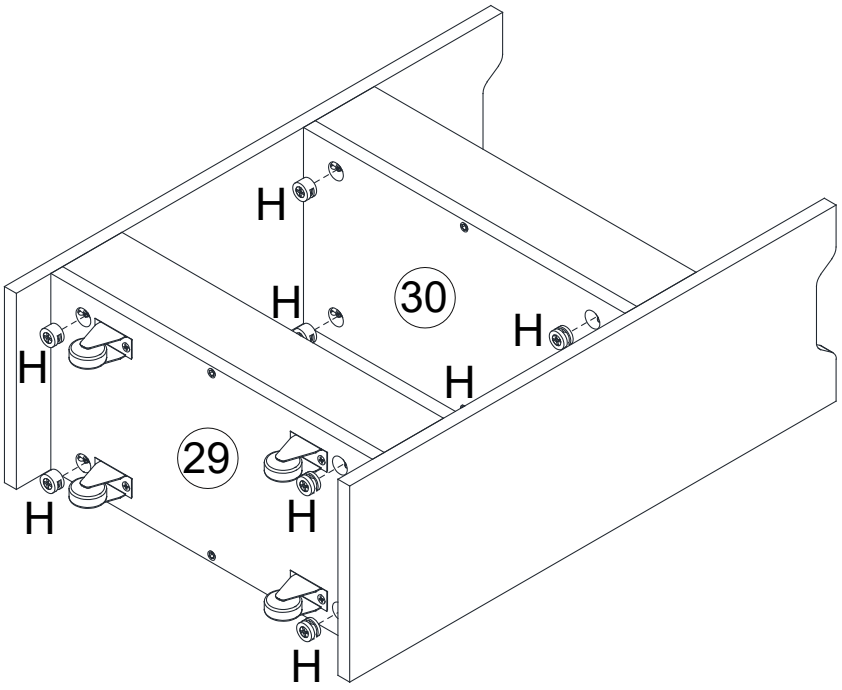
H
H
30
H
H
H
29
H
H
H

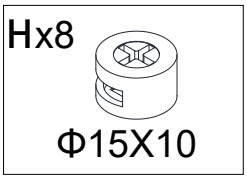
Hx8
Φ15X10

41

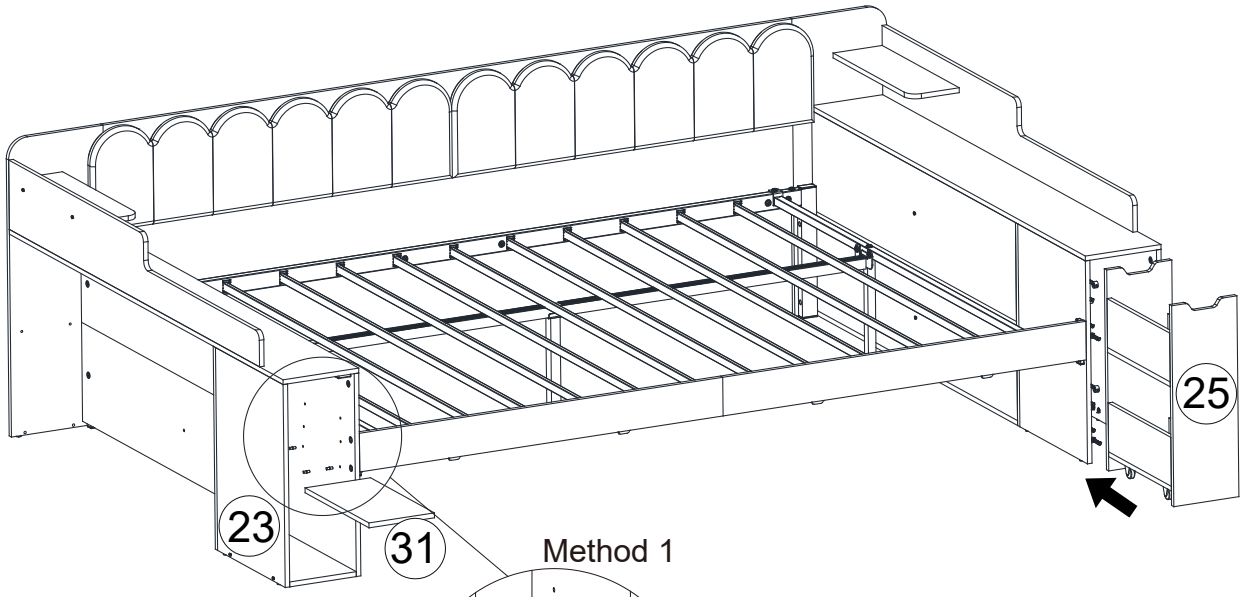
25
23
31

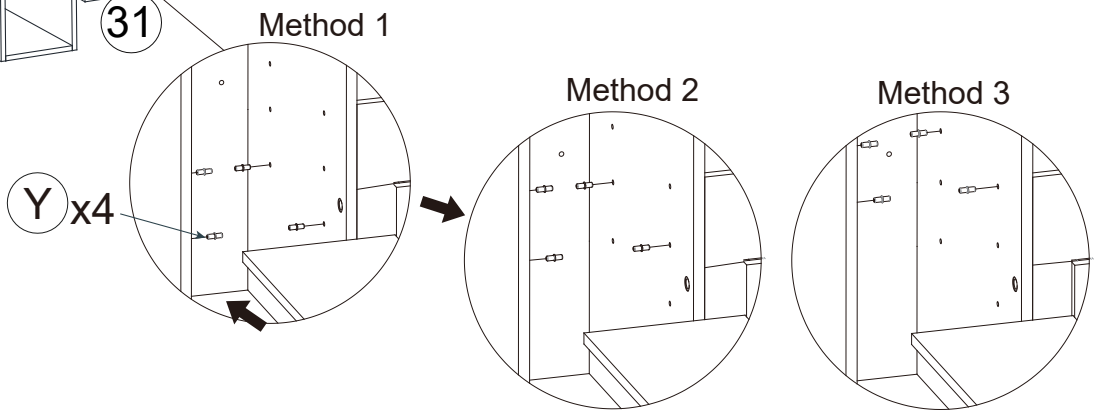
Method 1
Method 2
Method 3
Y x4

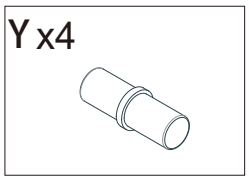
Y x4

42

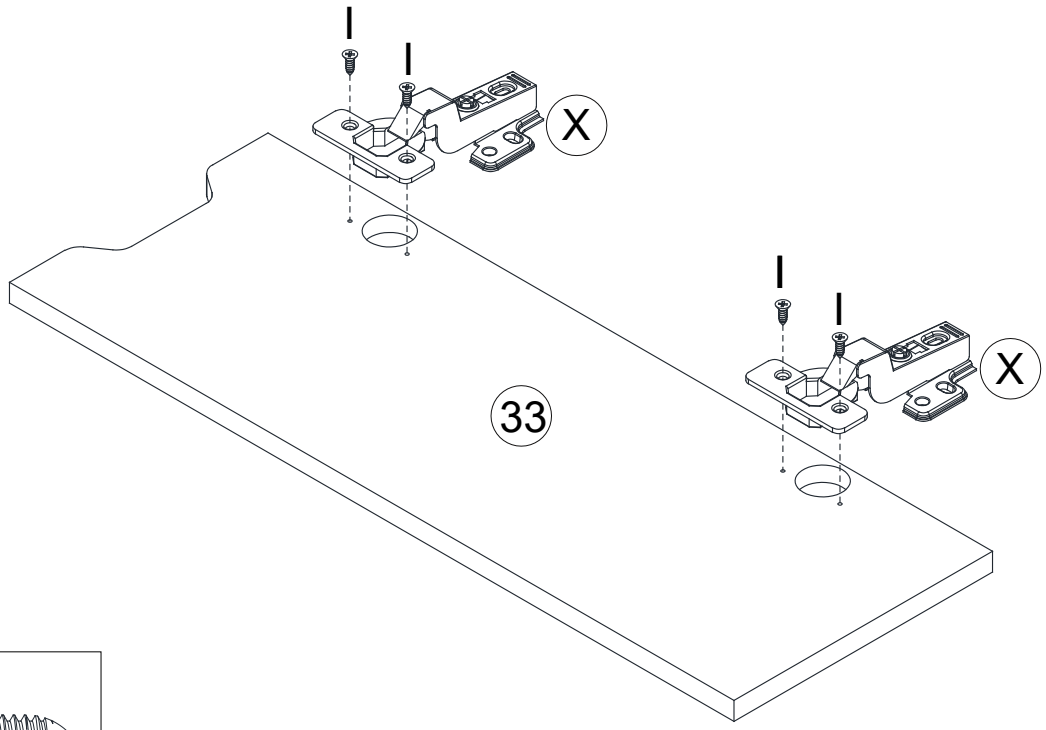

I x4

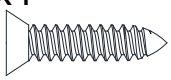

ST4.2X12

43

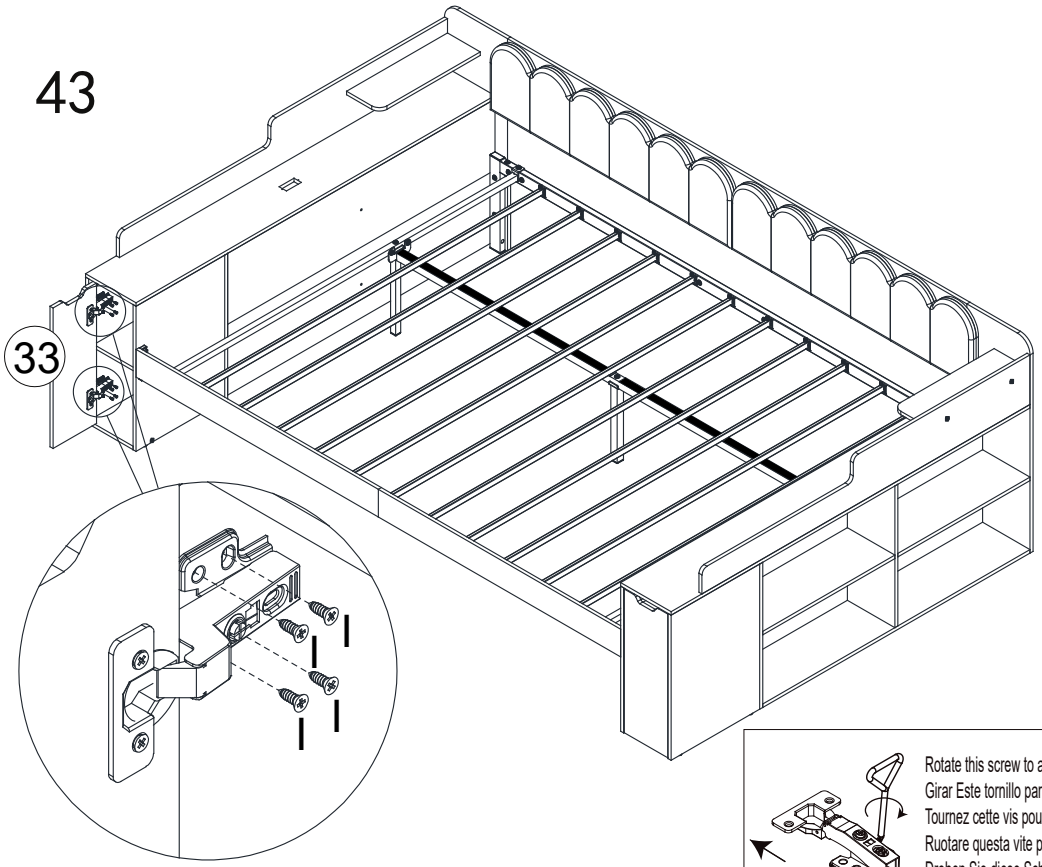

Rotate this screw to adjust the front and rear distance
Girar Este tornillo para ajustar la distancia delantera y trasera
Tournez cette vis pour ajuster la distance avant - arrière
Ruotare questa vite per regolare la distanza anteriore e posteriore
Drehen Sie diese Schraube, um den vorderen und hinteren Abstand einzustellen

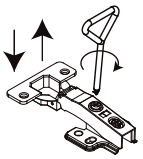

Rotate this screw to adjust the height up and down
Ruotare questa vite per regolare l'altezza su e giù
Tournez cette vis pour ajuster la hauteur de haut en bas
Girar Este tornillo para ajustar la altura hacia arriba y hacia abajo
Drehen Sie diese Schraube, um die Höhe nach oben und unten einzustellen

I x8

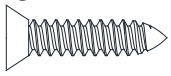

ST4.2X12

44

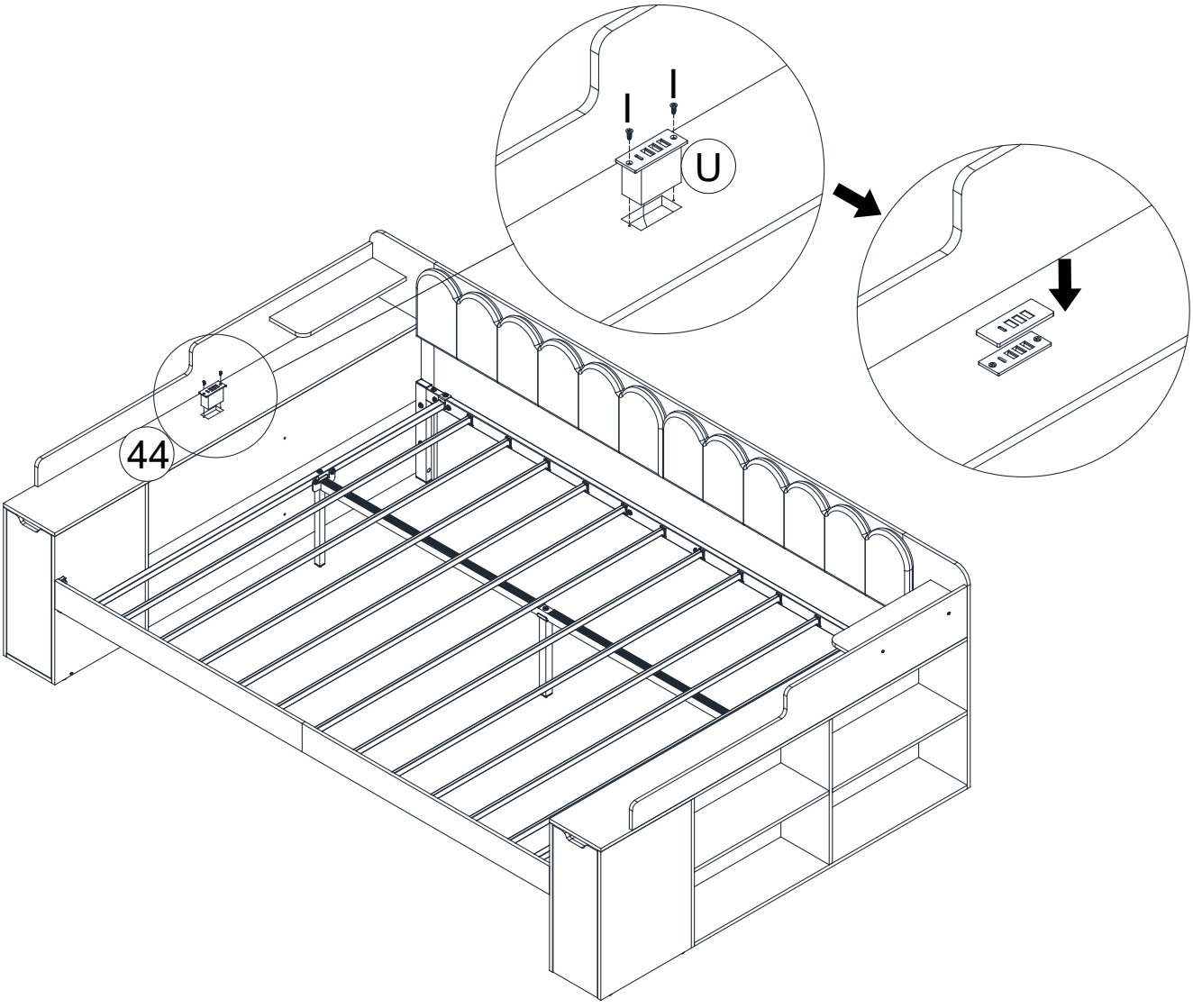

I x2

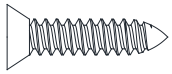

ST4.2X12

45

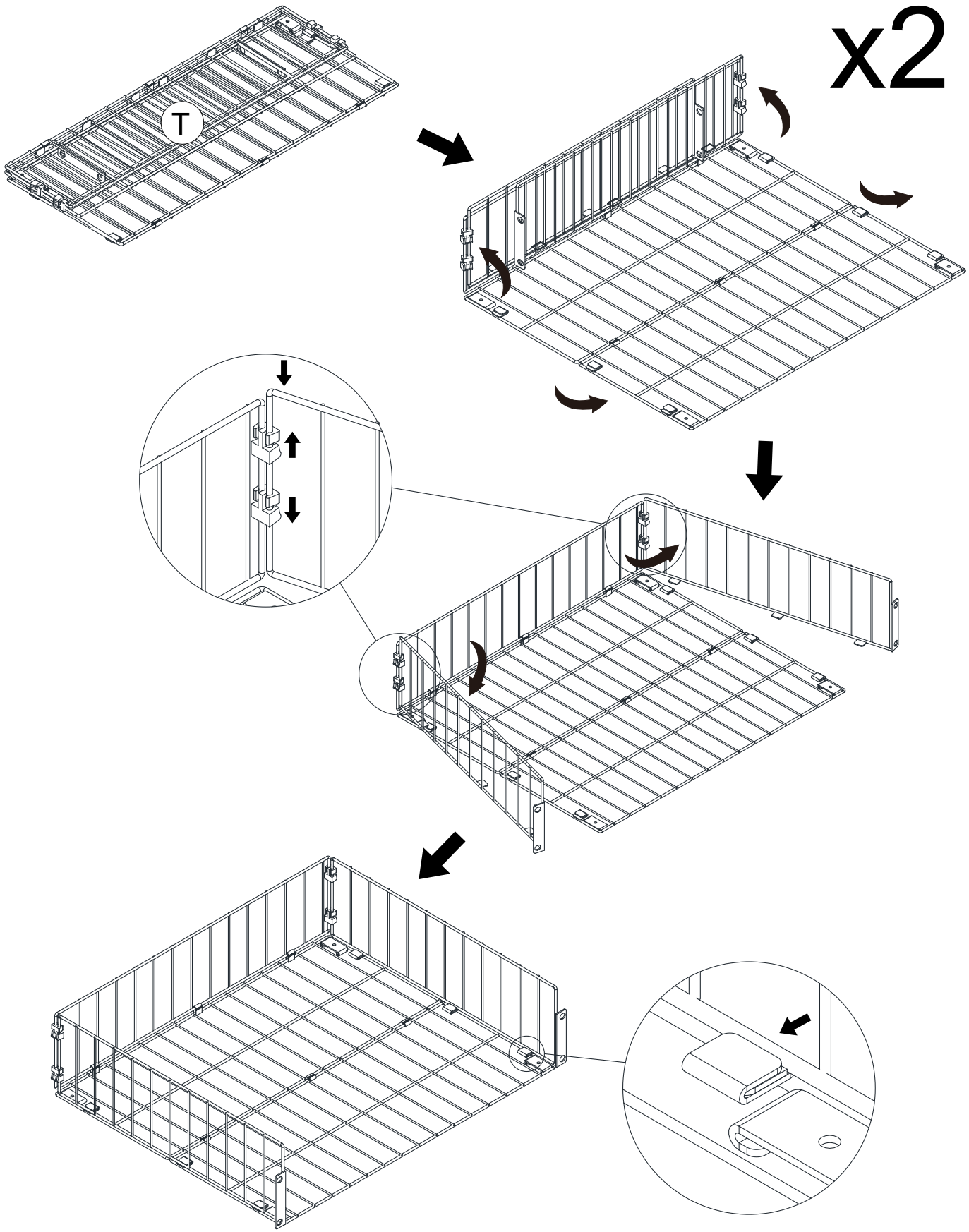

46

x2

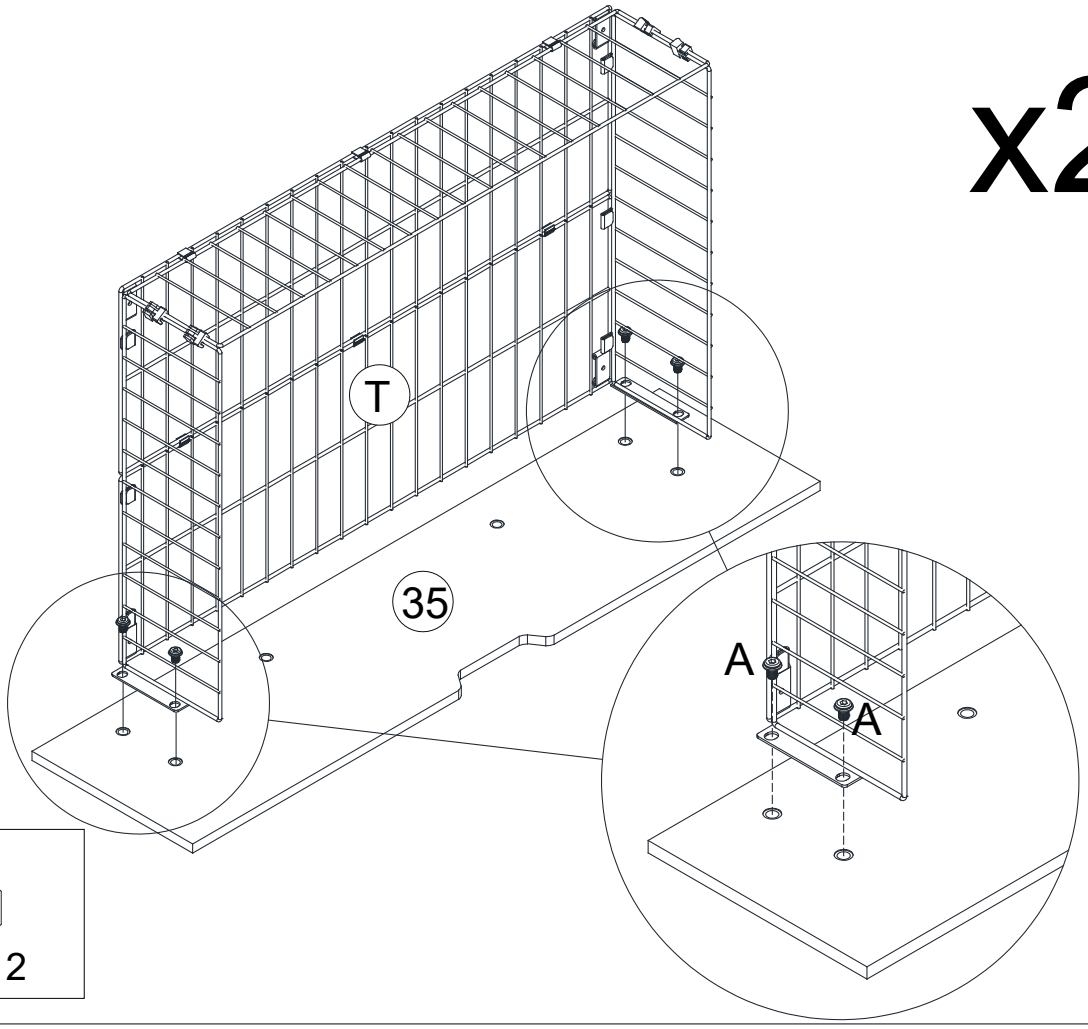

Ax8



M8X12

47

x2

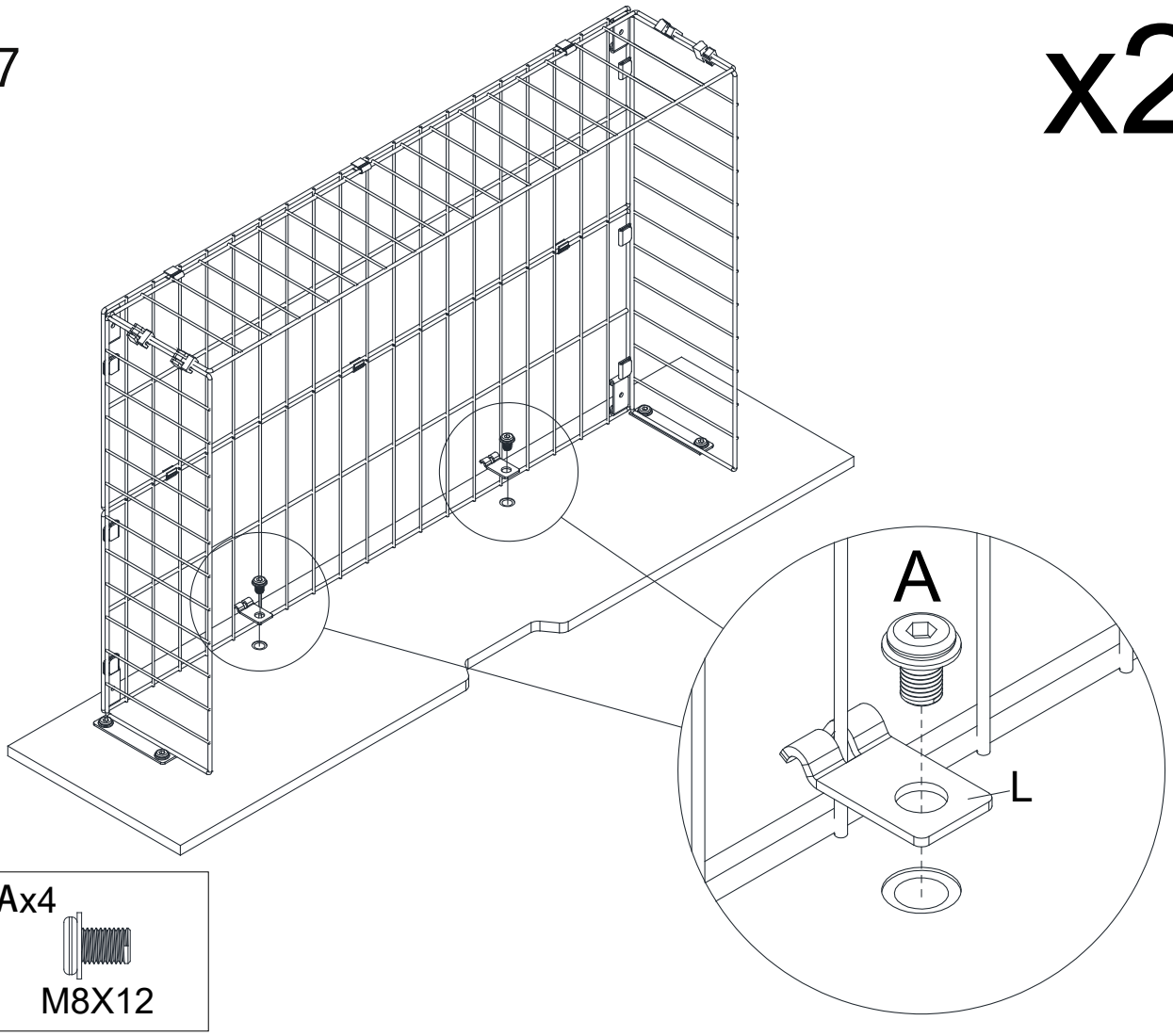

Ax4

M8X12

48

x2

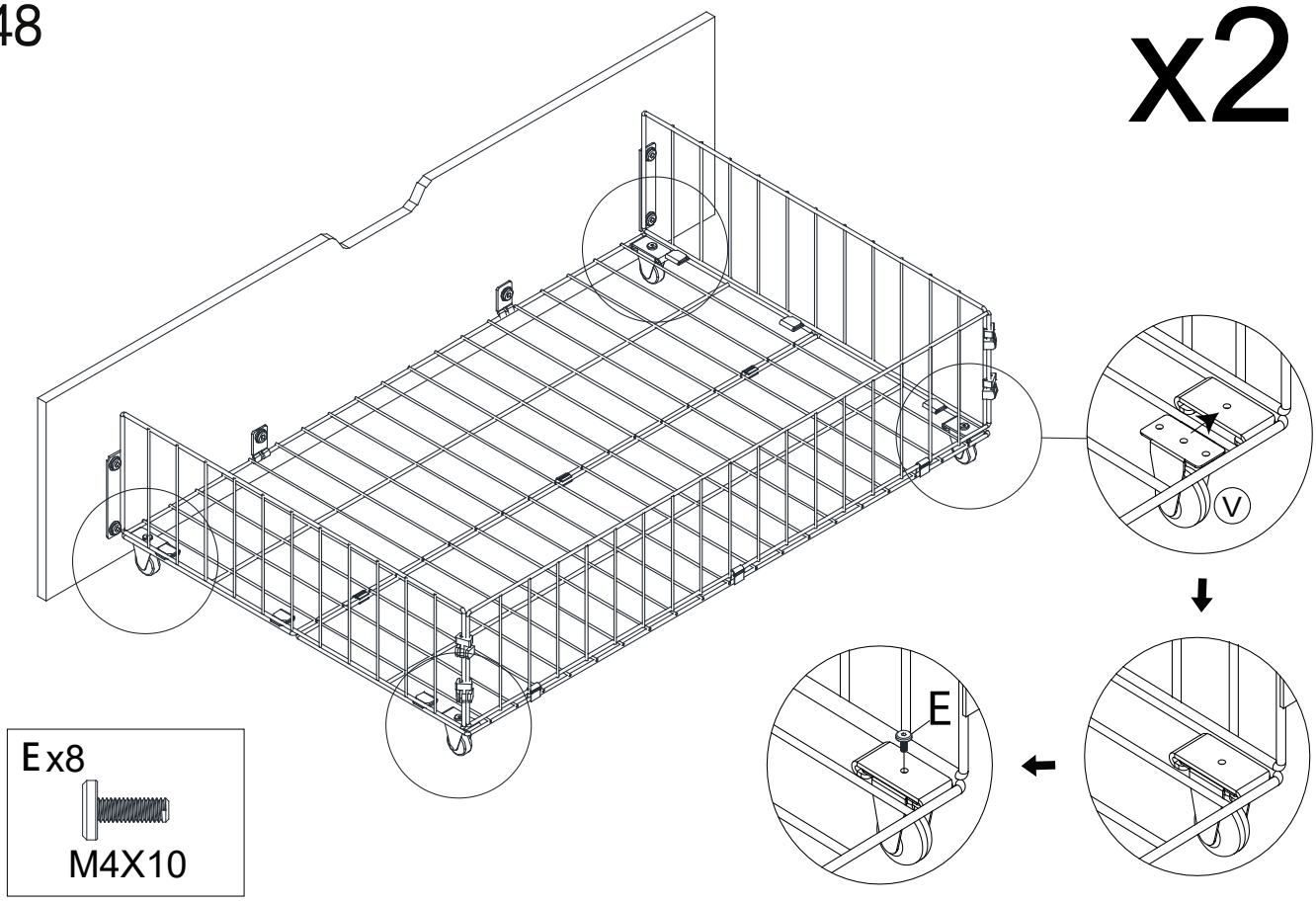

49 After assembly is completed, all the holes should be labeled with component Z!
Après l'assemblage, tous les trous sont équipés des pièces Z!
Nach dem Zusammenbau werden alle Löcher mit den Bauteilen Z versehen!
Dopo il montaggio, applicare tutti i componenti sui fori Z!
Después de montar, coloque los componentes en todos los orificios Z!

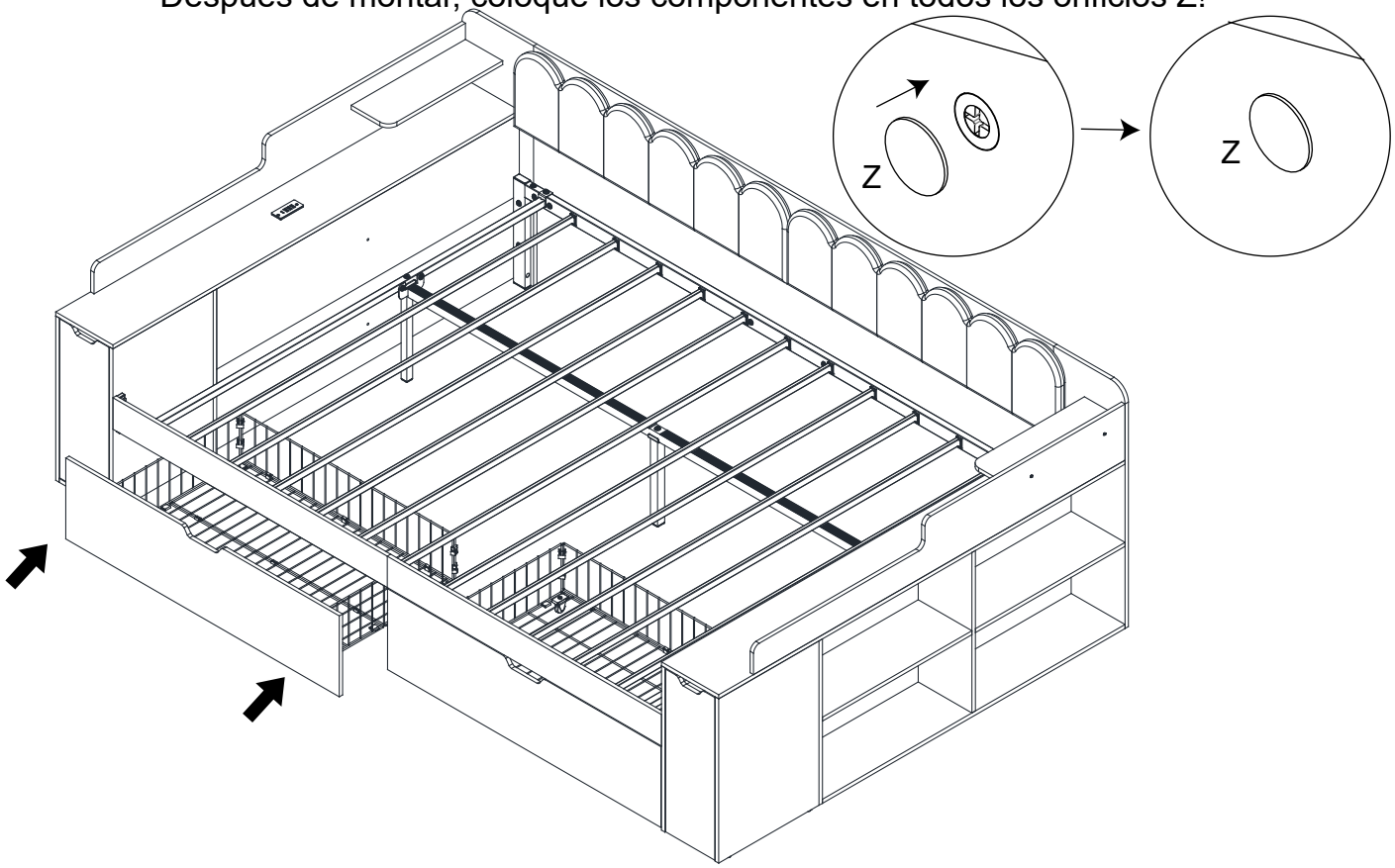

CERTIFICATE OF CONFORMITY

Certificate No.: KEYS241104015001RH-03R1

Applicant	:	SHENZHEN Using Intelligent Technology CO.,LTD.
Address	:	No. 22 Chenwu Road, Dakang Community, Yuanshan Street, Longgang District, Shenzhen
Manufacturer	:	Shenzhen Yousheng Intelligent Technology Co., Ltd. Dongguan Branch
Address	:	Room 504, Building 2, No. 55 West Shilong Section, Dongjiang Avenue, Shilong Town, Dongguan City, Guangdong Province
Sample Name	:	British socket
Trademark	:	Using
Main Model	:	YS-UK1660
Additional model	:	YS-UK1661,YS-UK1662,YS-UK1663,YS-UK1664,YS-UK1665, IYS-MU1661,YS-MU1662,YS-MU1663,YS-MU1664,YS-MU1665, YS-EU1661,YS-EU1662,YS-EU1663,YS-EU1664,YS-EU1665,YS-8033

RoHS 2.0 Directive (EU) 2015/863 and (EU)2017/2102 amending Annex II to Directive 2011/65/EU.

The standard(s) used for showing compliance with the essential requirements:

Applicable Standard(s)

IEC 62321-3-1: 2013
IEC 62321-4:2013 +AMD1:2017
IEC 62321-5:2013
IEC 62321-6:2015
IEC 62321-7-1:2015
IEC 62321-7-2:2017
IEC 62321-8:2017

The EUT described above has been consolidated by us and found in compliance with the council RoHS 2.0 Directive (EU) 2015/863 and (EU)2017/2102 amending Annex II to Directive 2011/65/EU.
The certificate applies to the tested sample above mentioned only and shall not imply an assessment of the whole production. It is only valid in connection with the test report number. KEYS241104015001RH-03R1

RoHS

KEYS Testing Technology Co., Dongguan

Tony Qian/Approved Signatory
Date: Nov.06, 2024

Scan to view the original file

Guangdong KEYS Testing Technology Co., Ltd.
Address: Building 1, No.18, Shihuan Road, Dongcheng Subdistrict, Dongguan, Guangdong, China
Tel: +86-0769-89798319 http://www.keys-lab.com E-mail: info@keys-lab.com

Сертификат сертификации 認証証書 diplômes 인증서 Сертификат сертификации 認証証書 diplômes 인증서

CERTIFICATE OF CONFORMITY

Certificate No.	FCS202503546CA01
Product	British socket
Brand Name	Using
Model(s) No.	YS-8033
Series Model	YS-8034, YS-8035, YS-8036, YS-8037, YS-8038, YS-8039,YS-135801,YS-135802, YS-135803, YS-135804, YS-135805
Holder	Shenzhen Using Intelligent Technology CO.,LTD.
Address	A1605, Excellence Meilin Center Square (South District), No. 126 Zhongkang Road, Meidu Community, Meilin Street, Futian District, Shenzhen
Manufacturer	Shenzhen Using Intelligent Technology Co., Ltd. Dongguan Branch
Address	5th Floor, Building 2, No. 55 West Road, Shilong Section, Dongjiang Avenue,Shilong Town, Dongguan City, Guangdong Province
Report No.	FCS202503546E02

TEST STANDARDS:
EN 55032:2015/A1:2020
EN 55035:2017/A11:2020
EN 61000-4-2:2009 EN IEC 61000-4-3:2020
EN 61000-4-4:2012 EN 61000-4-5:2014/A1:2017
EN 61000-4-6:2013 EN 61000-4-8:2010
EN 61000-4-11:2004/A1:2017

The applicant of the certificate is authorized to use this certificate in connection with EC declaration of conformity to the Directive. The certificate is only applicable to the equipments described above.
The submitted sample of the above equipment has been tested and found to comply with the following European Directive

EMC Directive - 2014/30/EU

CE

Approved by: Jack Wang

March 28, 2025

Jack Wang/Managerial

The statement is based on a single evaluation of the sample of above mentioned product(s). It does not imply an assessment of the whole production.

Dongguan Funas Testing Technology Co.,Ltd.
Add: Room 105 Floor Bao hao Technology Building 1 NO.15 Gong ye West Road Hi-TechIndustrial, Song shan lake Dongguan, China
Tel: 0769-27280901 Fax:0769-27280901 http://www.fcs-lab.com
E-mail:andy.yue@fcs-lab.com

CERTIFICATE OF CONFORMITY

Certificate No.	FCS202503546CA02
Product	British socket
Brand Name	Using
Model(s) No.	YS-8033
Series Model	YS-8034, YS-8035, YS-8036, YS-8037, YS-8038, YS-8039,YS-135801, YS-135802,YS-135803, YS-135804, YS-135805
Holder	Shenzhen Using Intelligent Technology CO.,LTD.
Address	A1605, Excellence Meilin Center Square (South District), No. 126 Zhongkang Road, Meidu Community, Meilin Street, Futian District, Shenzhen
Manufacturer	Shenzhen Using Intelligent Technology Co., Ltd. Dongguan Branch
Address	5th Floor, Building 2, No. 55 West Road, Shilong Section, Dongjiang Avenue,Shilong Town, Dongguan City, Guangdong Province
Report No.	FCS202503546A01

TEST STANDARDS:

EN IEC 62368-1:2024 + A11:2024

The applicant of the certificate is authorized to use this certificate in connection with EC declaration of conformity to the Directive. The certificate is only applicable to the equipments described above.
The submitted sample of the above equipment has been tested and found to comply with the following European Directive

LVD Directive - 2014/35/EU Directive

CE

Approved by: Jack Wang

March 28, 2025

Jack Wang/Managerial

The statement is based on a single evaluation of the sample of above mentioned product(s). It does not imply an assessment of the whole production.

Dongguan Funas Testing Technology Co.,Ltd.
Add: Room 105 Floor Bao hao Technology Building 1 NO.15 Gong ye West Road Hi-TechIndustrial, Song shan lake Dongguan, China
Tel: 0769-27280901 Fax:0769-27280901 http://www.fcs-lab.com
E-mail:andy.yue@fcs-lab.com