ASSEMBLY INSTRUCTION
BAUANLEITUNG

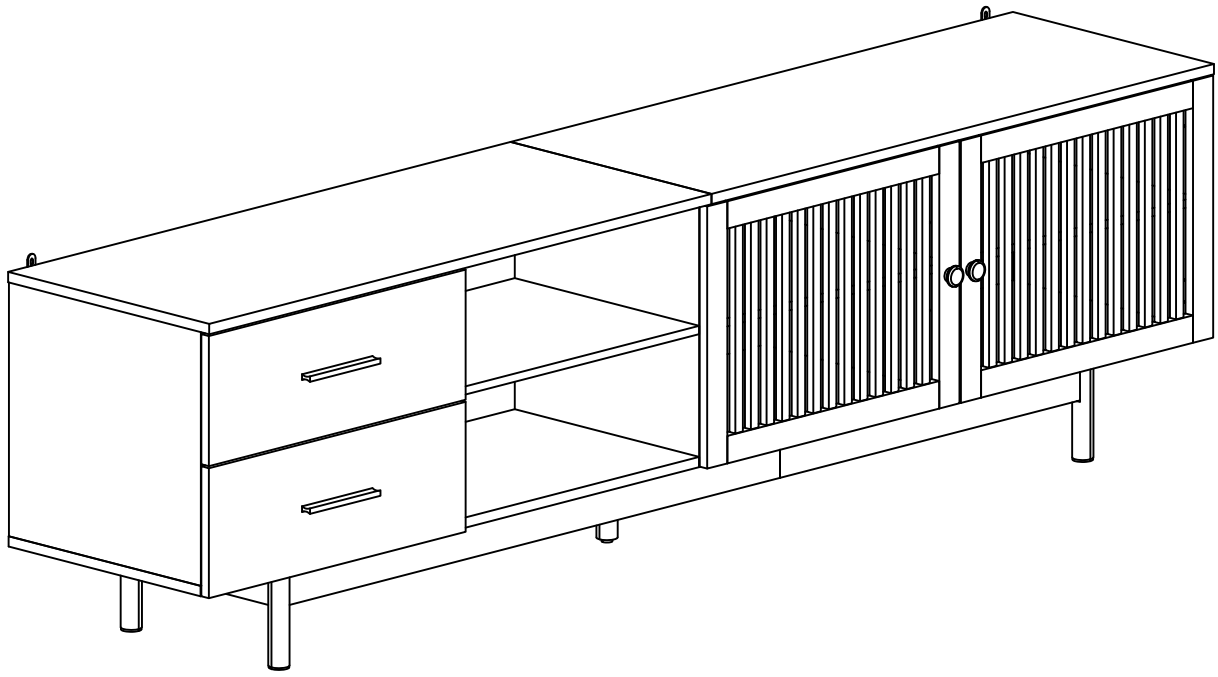

Before Installation

Important-Please read these instructions fully before starting assembly

Thank you for purchasing this quality product.Be sure to check all packing materials carefully for small parts,which may have come loose inside the carton during shipment.Identify and count all items according to the PARTS LIST and/or HARDWARE LIST shown below.Check you have all the components and tools listed on the following pages.

●We recommend that you assemble this product with the assistance of another person;this will make the assembly easier,and will help eliminate damage to the product or injury to persons during assembly.

●Please do not over tighten screws or bolts until the assembly is completed.

●Keep children and animal away from the work area,small parts could choke if swallowed.Please put all parts on a non-abrasive floor before assembly,and follow the assembly steps to assemble your newly purchased product correctly and efficiently.

Cam Lock Assembly Instructions

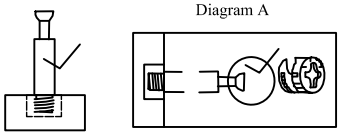

Insert Cam Bolt into hole as shown in diagram A.

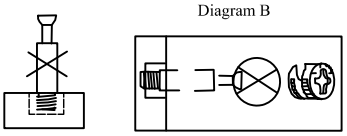

Make sure not to insert the Cam Bolt:
Too deep as shown in figure B as this will cause the Cam Lock to be misaligned and unable to interlock properly.

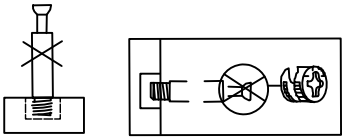

Also avoid inserting the Cam Bolt too close to the surface of the hole as shown in figure C,as this will cause the Cam Lock to be too loose,and not interlock properly.

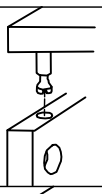

Connect the panels together.

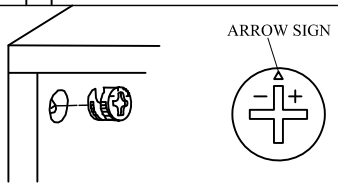

Insert the Cam Lock so the side opening fits over the head of the Cam Bolt.

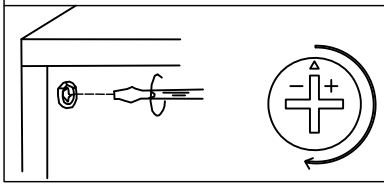

To tighten the Cam Lock,turn it clockwise on half a turn with a flat screwdriver.
*Do not use an automatic screwdriver as it may bend or break if too much power is imposed.

Parts list

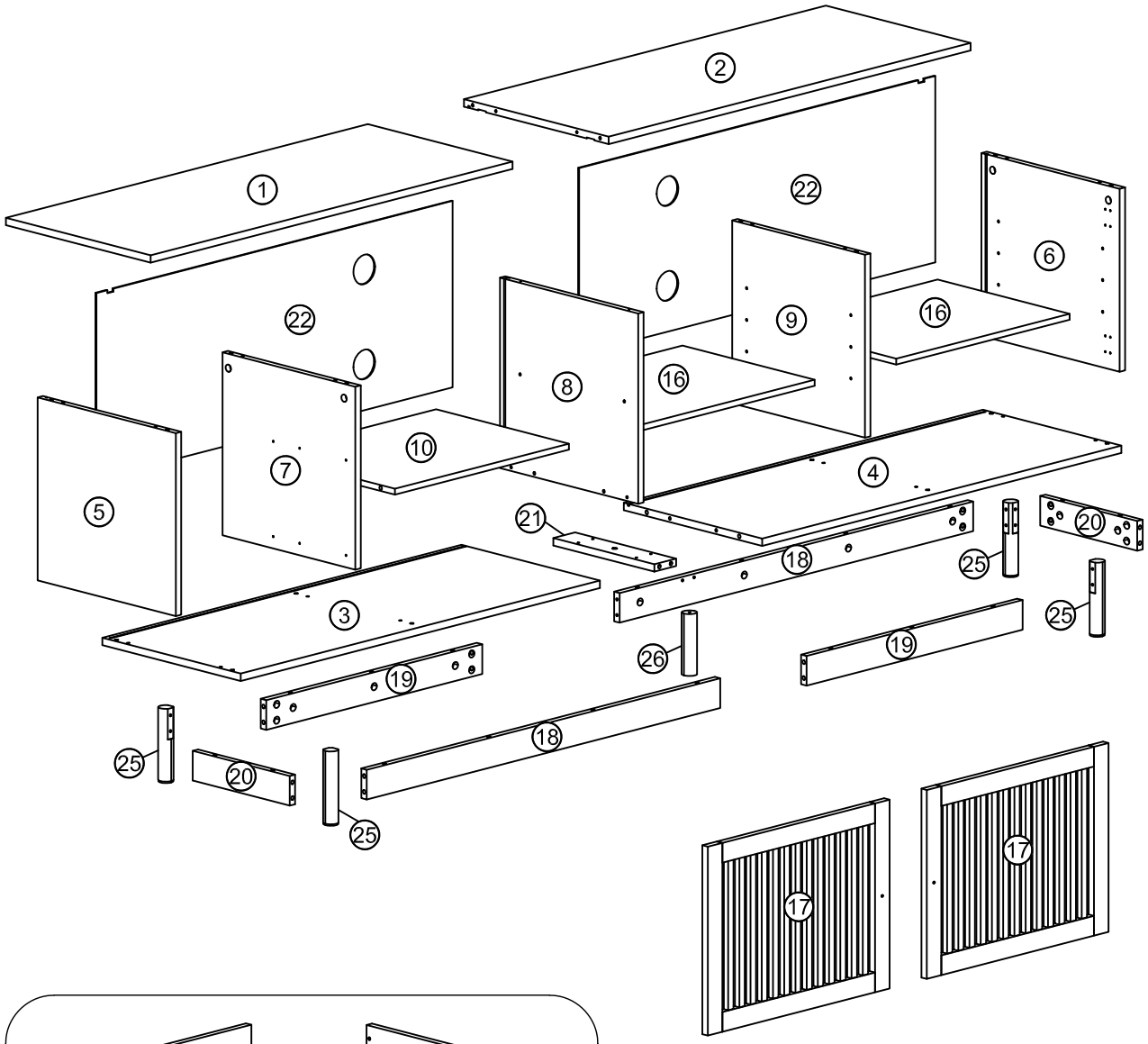
1
2
22
22
6
9
16
8
16
10
7
4
5
21
20
18
25
3
25
19
26
19
25
18
20
25
17
17

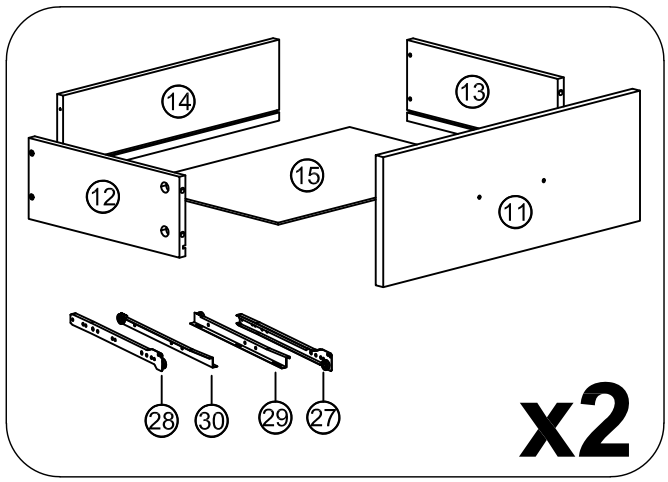
14
13
12
15
11
28
30
29
27
x2

① x 1 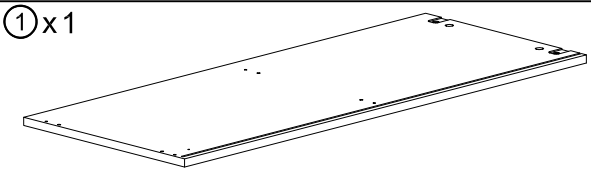	② x 1 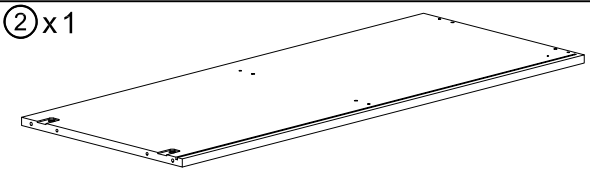	
③ x 1 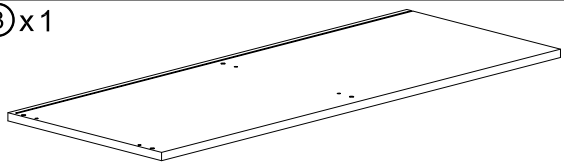	④ x 1 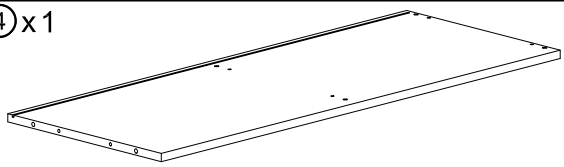	
⑤ x 1 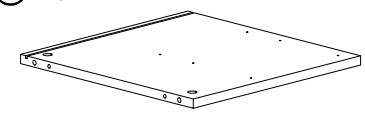	⑥ x 1 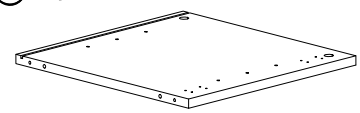	⑦ x 1 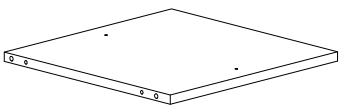
⑧ x 1 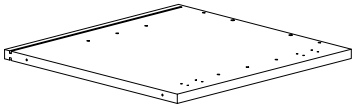	⑨ x 1 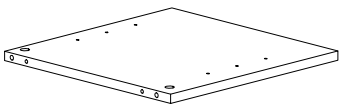	⑩ x 1 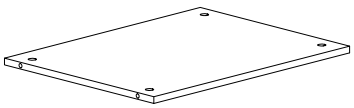
⑪ x 2 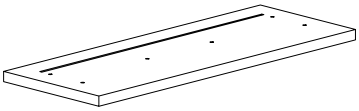	⑫ x 2 	⑬ x 2 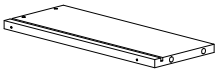
⑭ x 2 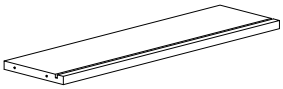	⑮ x 2 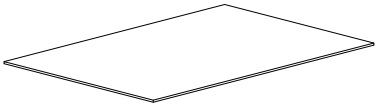	⑯ x 2 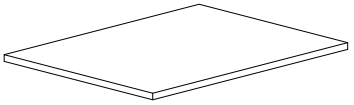
⑰ x 2 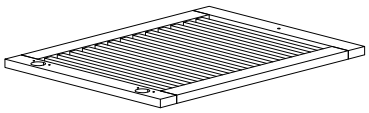	⑱ x 2 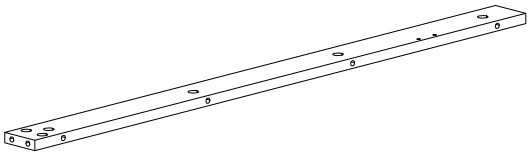	
⑲ x 2 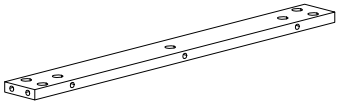	⑳ x 2 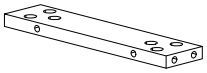	㉑ x 1 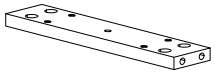
㉒ x 2 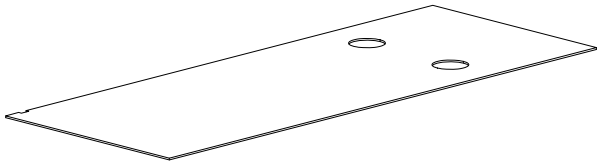	㉕ x 4 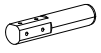	㉖ x 1 
㉗ x 2 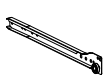	㉘ x 2 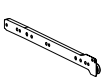	㉙ x 2 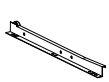	㉚ x 2 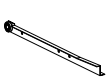	

Hardware

A x68	B x68	C x22	D x9	E x4	F x60
			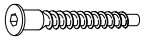		
Φ6x36mm	Φ15mm	Φ6x30mm	Φ7x48mm	M6x10mm	Φ3.5x12mm

G x4	H x10	J x2	K x16	L x1	M x2
				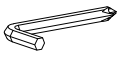	
Φ4x25mm	Φ4x35mm	Φ4x14mm	15x10mm	4mm	

N x2	P x2	Q x1	R x8	S x2	T x6
					
Φ4x45mm	Φ8x35mm	Φ19mm	5mm	140mm	M4x18mm

U x4	V x2	W x2	X x4	Y x10
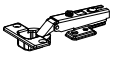		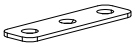		
				Φ20mm

G x4	H x10
	
Φ4x25mm	Φ4x35mm

(DE) Bitte beachten Sie,dass die Formen der Schrauben G und H ähnlich sind.Bitte installieren Sie entsprechend der Anleitung und unterscheiden Sie sie

(UK) Please note that the shapes of screws G and H are similar.Please install according to the instructions and distinguish them!

(FR) Notez que les vis G et H ont des formes similaires.Veuillez les installer en suivant les instructions pour les séparer!

(IT) Si prega di notare che le forme delle viti G e H sono simili.Si prega di installarle seguendo le istruzioni e di distinguerle!

(ES) Por favor,tenga en cuenta que las formas de los tornillos G y H son similares.Por favor,instálelos de acuerdo con las instrucciones y distíngalos.

(NL) Let op,de vormen van schroeven G en H zijn vergelijkbaar.Installeer volgens de instructies en maak onderscheid tussen ze!

(SE) Observera att formerna pa skruvarna G och H är lika.Installera enligt anvisningarna och särskilj dem!

(PL) Zauważ, że kształty śrub G i H są podobne. Zainstaluj zgodnie z instrukcjami i rozróżnij je!

1

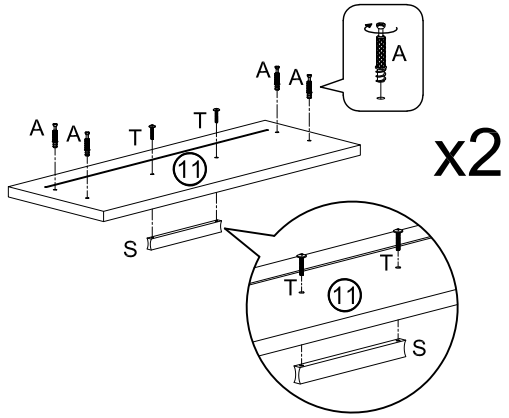

x2

A	x8
Φ6x36mm	

S	x2
140mm	

T	x4
M4x18mm	

2

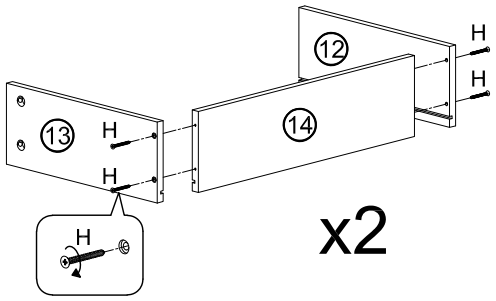

x2

H	x8
Φ4x35mm	

3

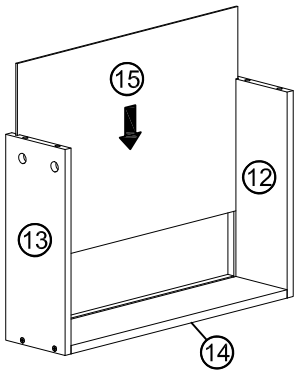

x2

4

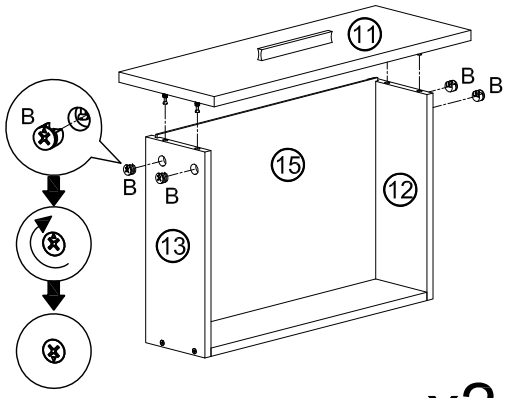

x2

B	x8
Φ15mm	

5

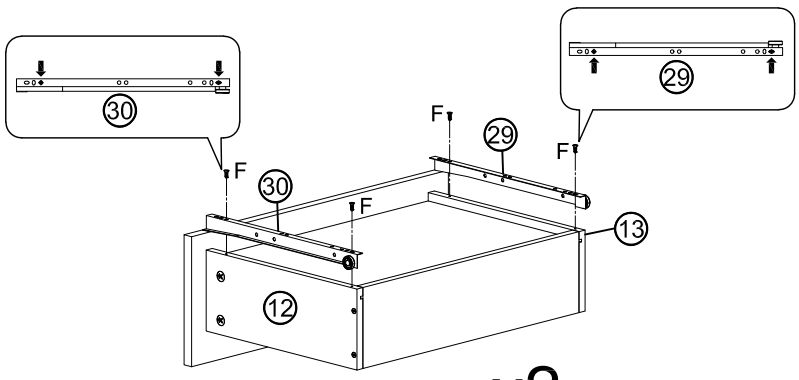

x2

F	x8
Φ3.5x12mm	

6

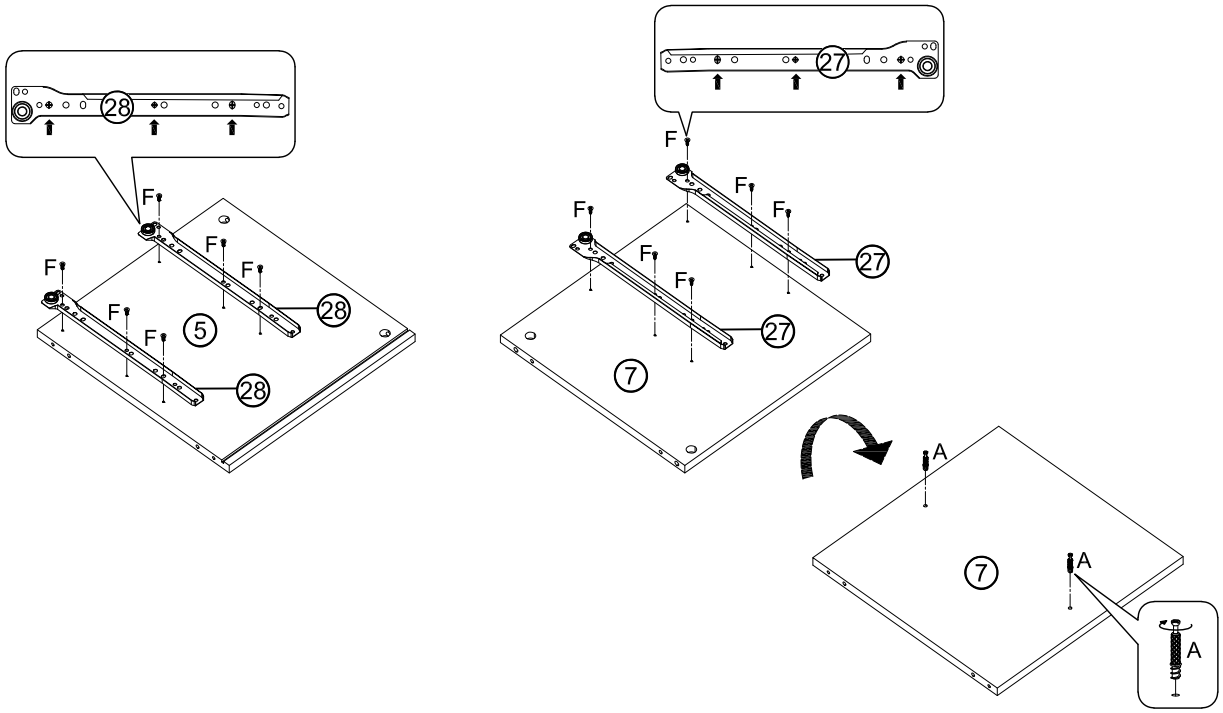

A	x2
Φ6x36mm	

F	x12
Φ3.5x12mm	

7

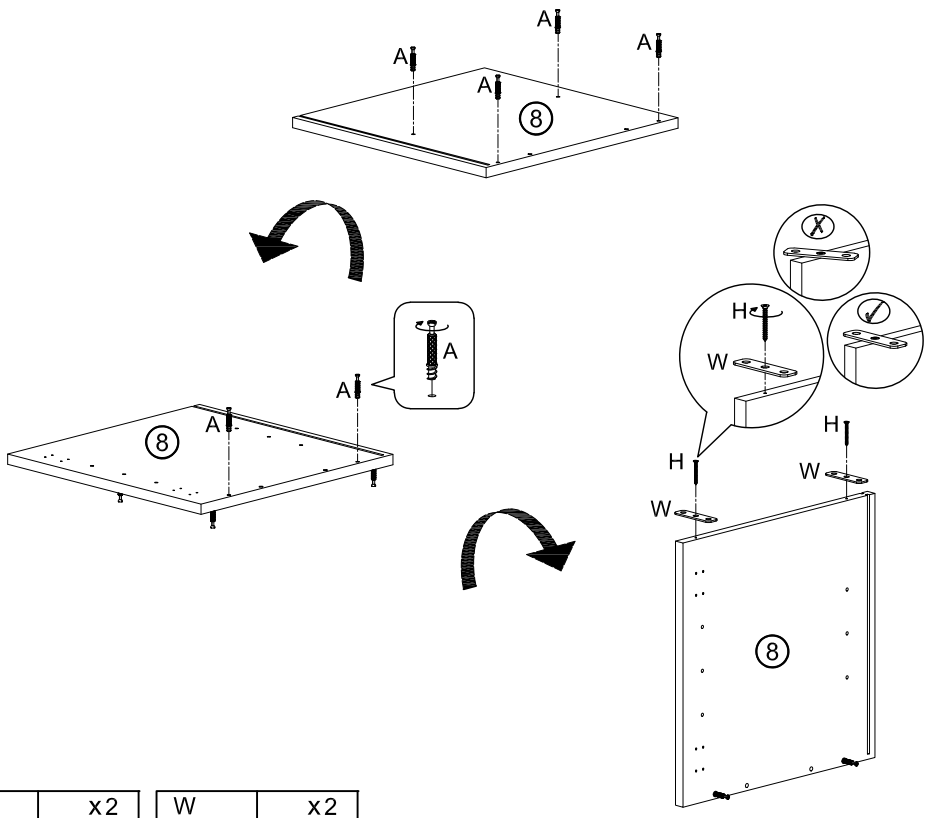

A	x6
Φ6x36mm	

H	x2
Φ4x35mm	

W	x2

8

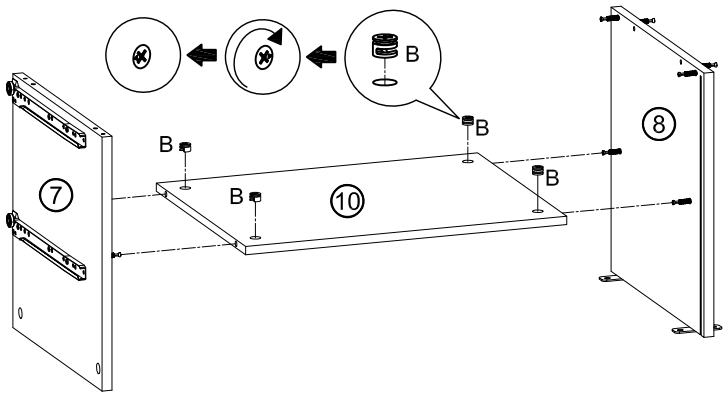

B	x4
	
Φ15mm	

9

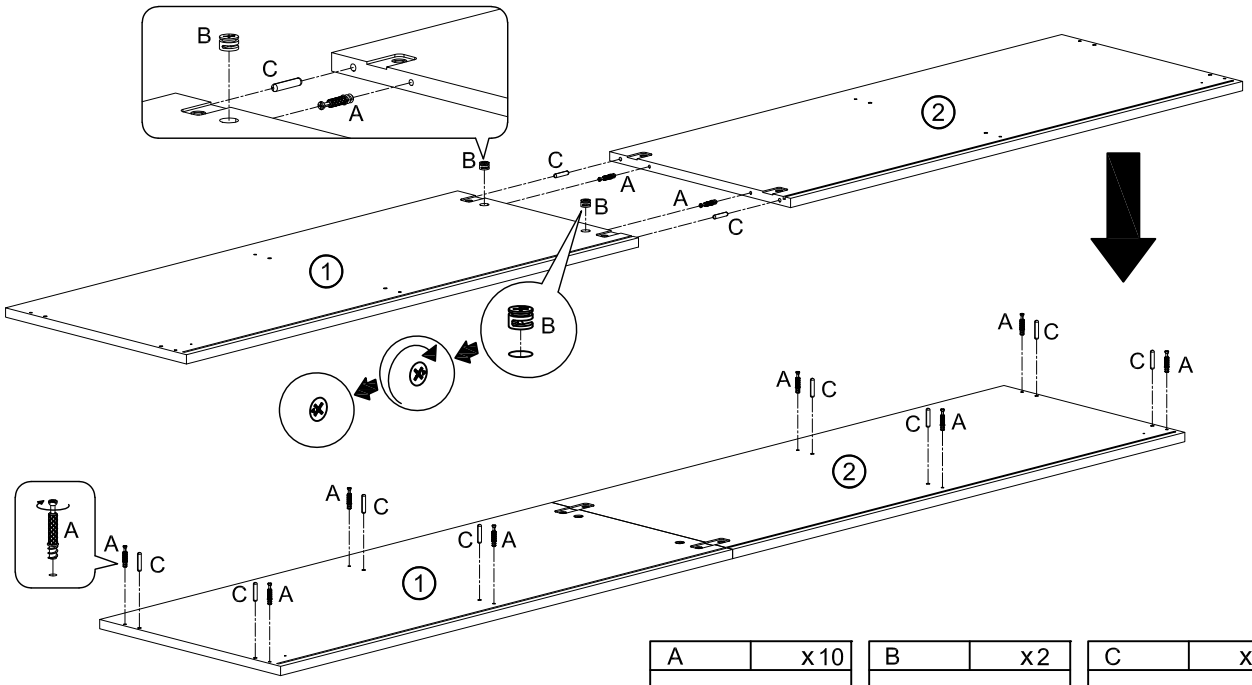

A	x10
	
Φ6x36mm	

B	x2
	
Φ15mm	

C	x10
	
Φ6x30mm	

10

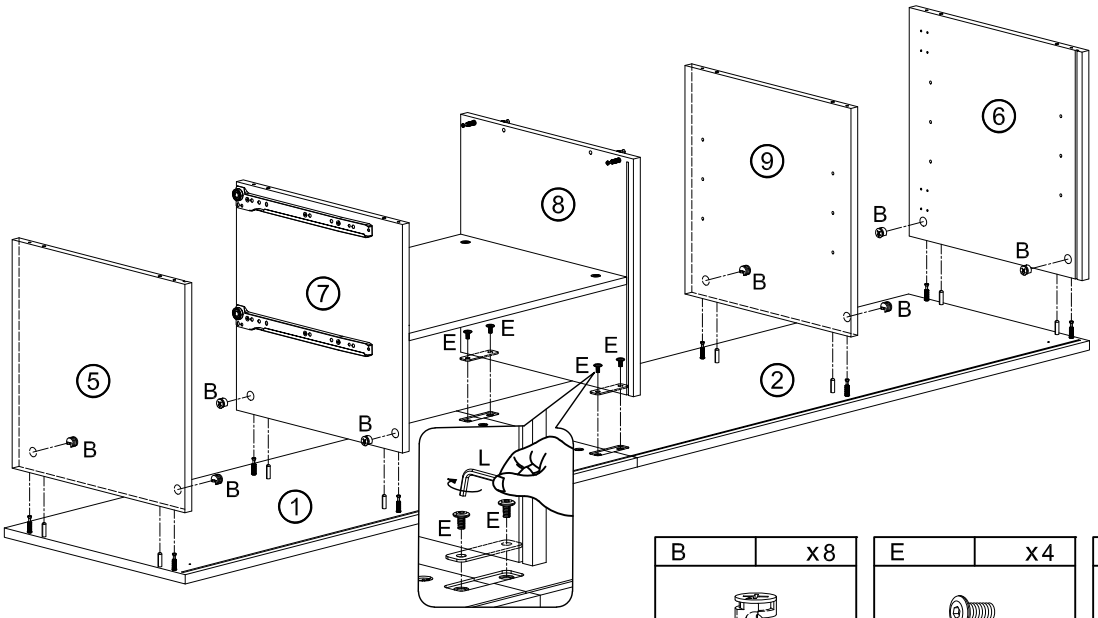

B	x8
	
Φ15mm	

E	x4
	
M6x10mm	

L	x1
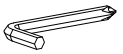	
4mm	

11

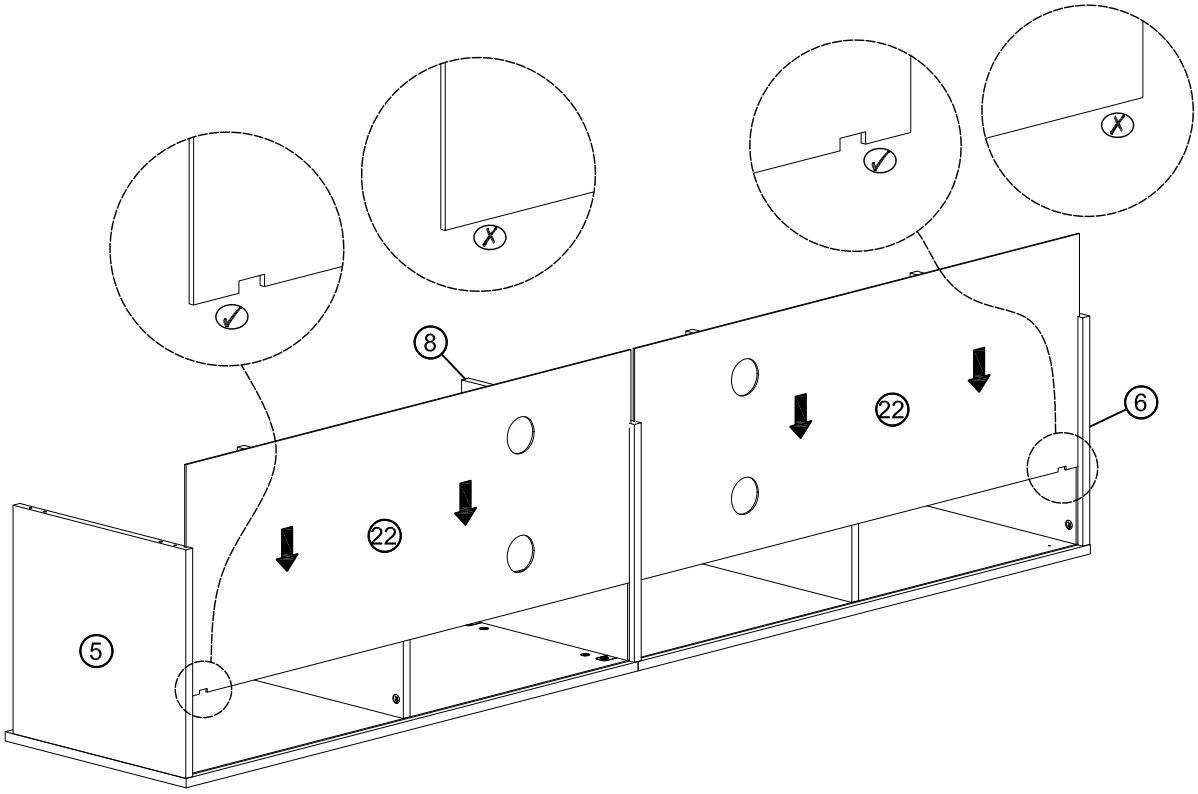

12

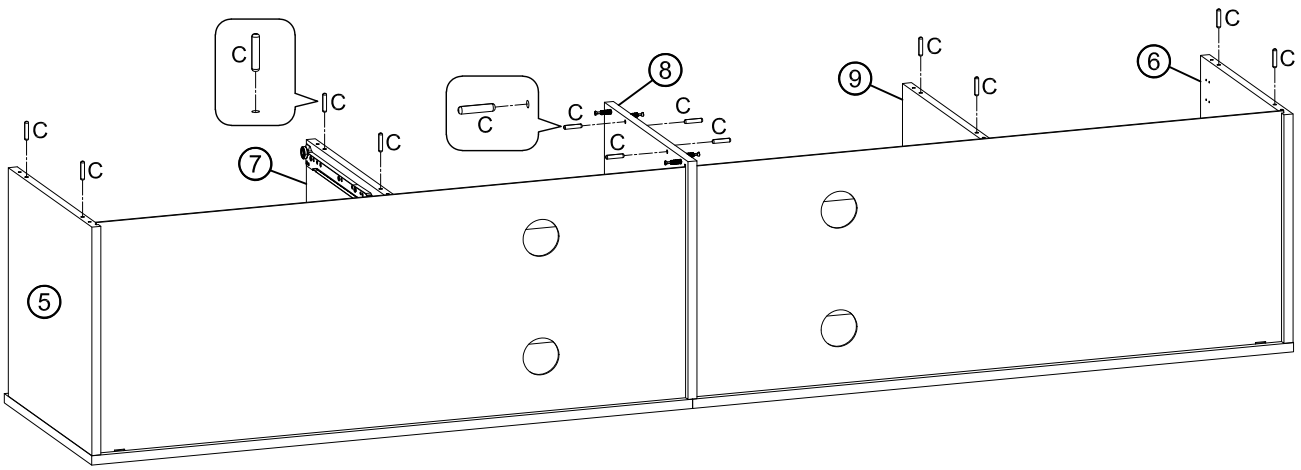

C	x12
	
Φ6x30mm	

13

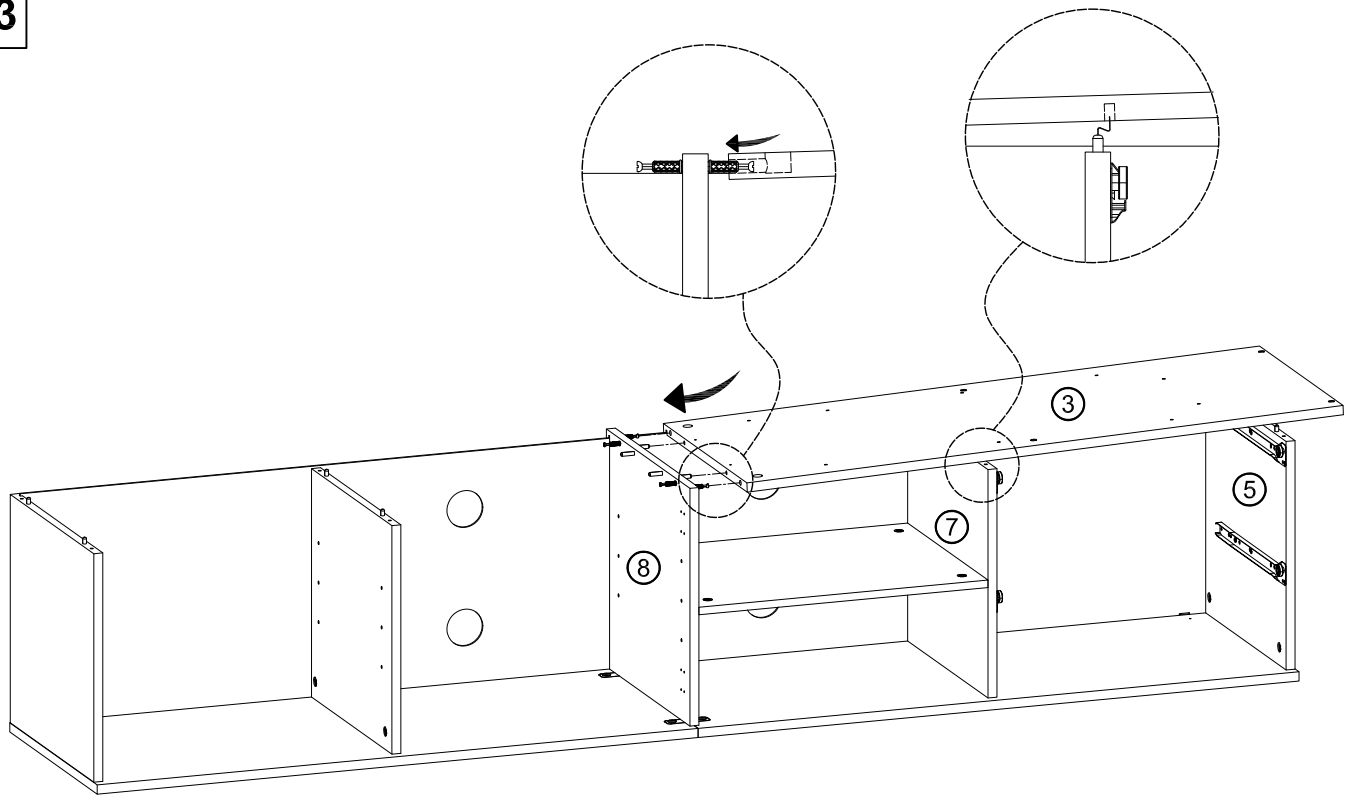

14

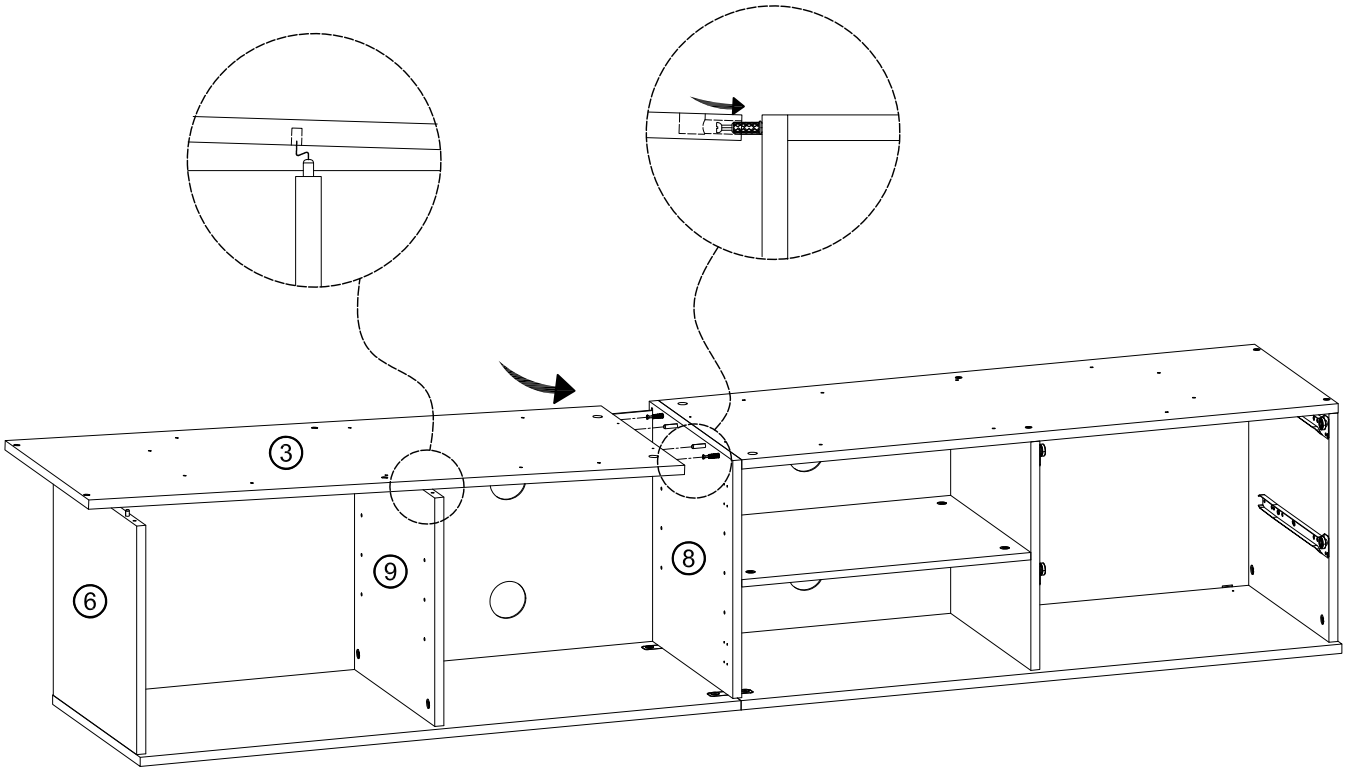

15

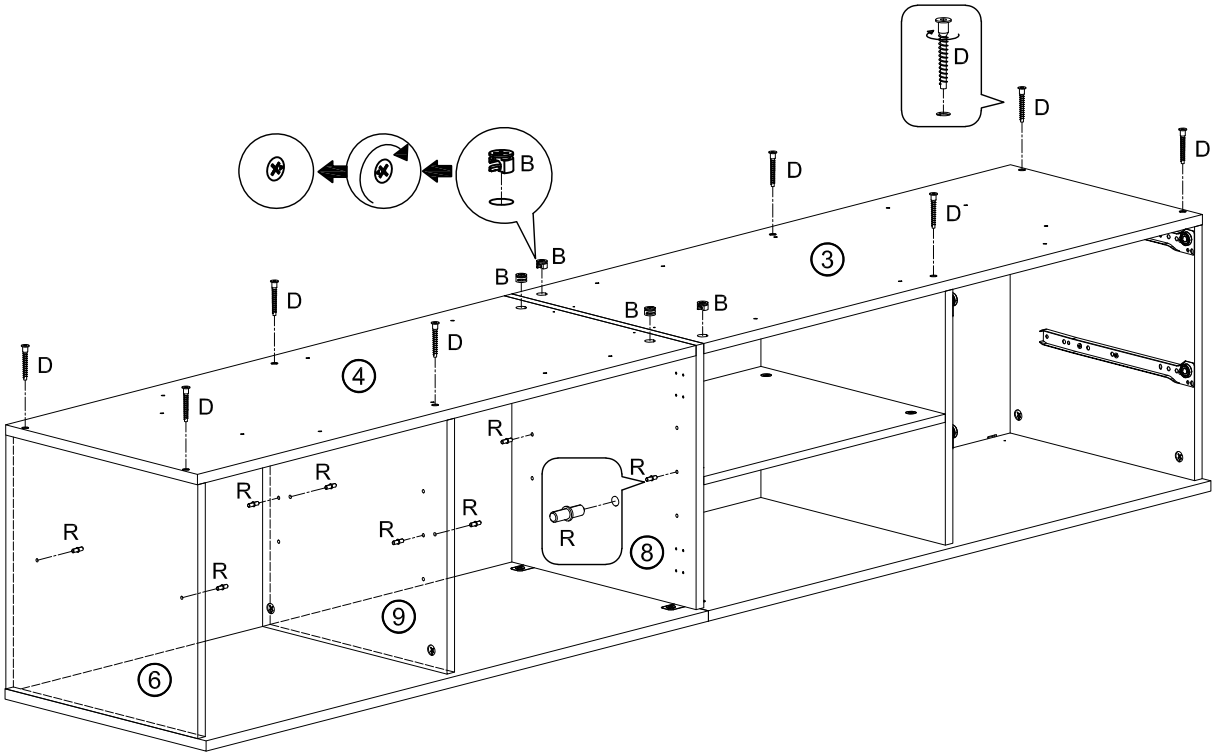

B	x4
Φ15mm	

D	x8
Φ7x48mm	

R	x8
5mm	

16

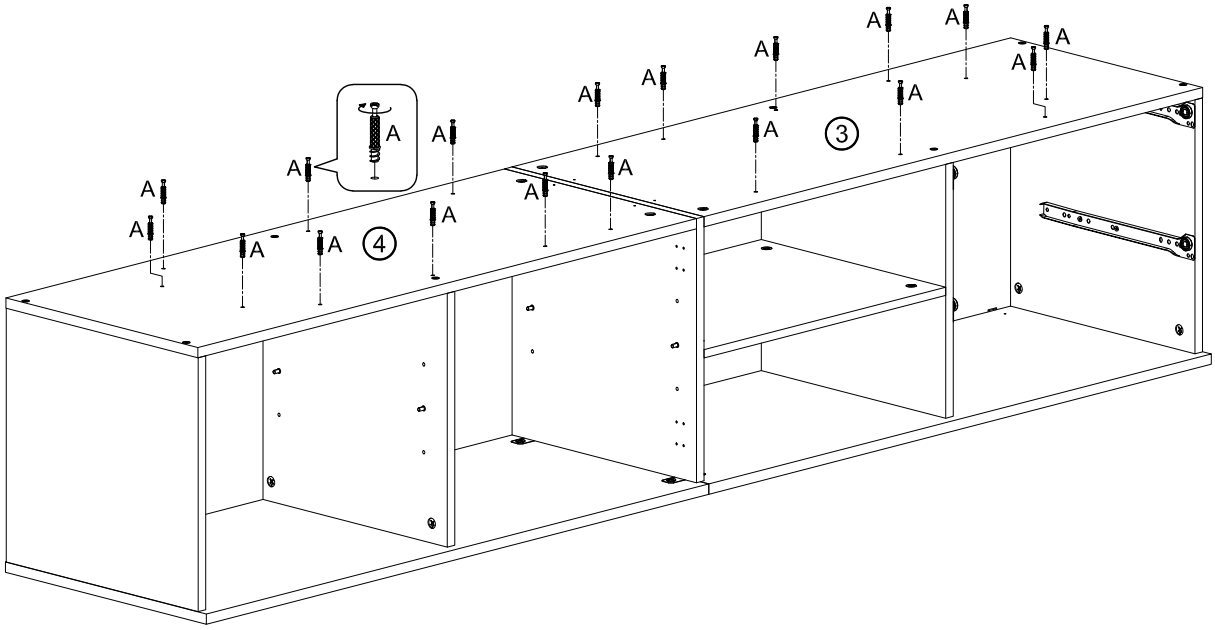

A	x18
Φ6x36mm	

17

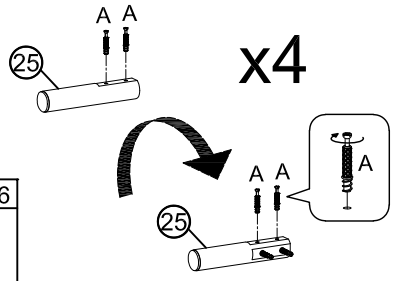

A	x 16
Φ6x36mm	

18

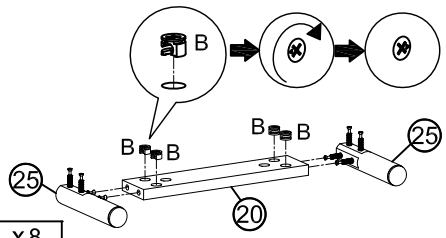

B	x 8
Φ15mm	

19

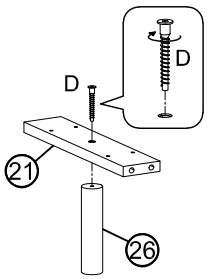

D	x 1
Φ7x48mm	

20

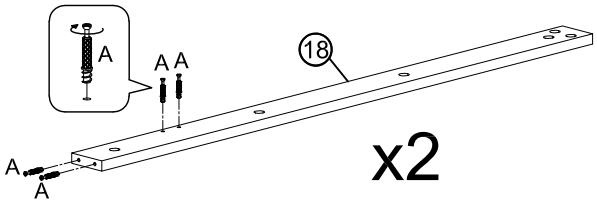

A	x 8
Φ6x36mm	

21

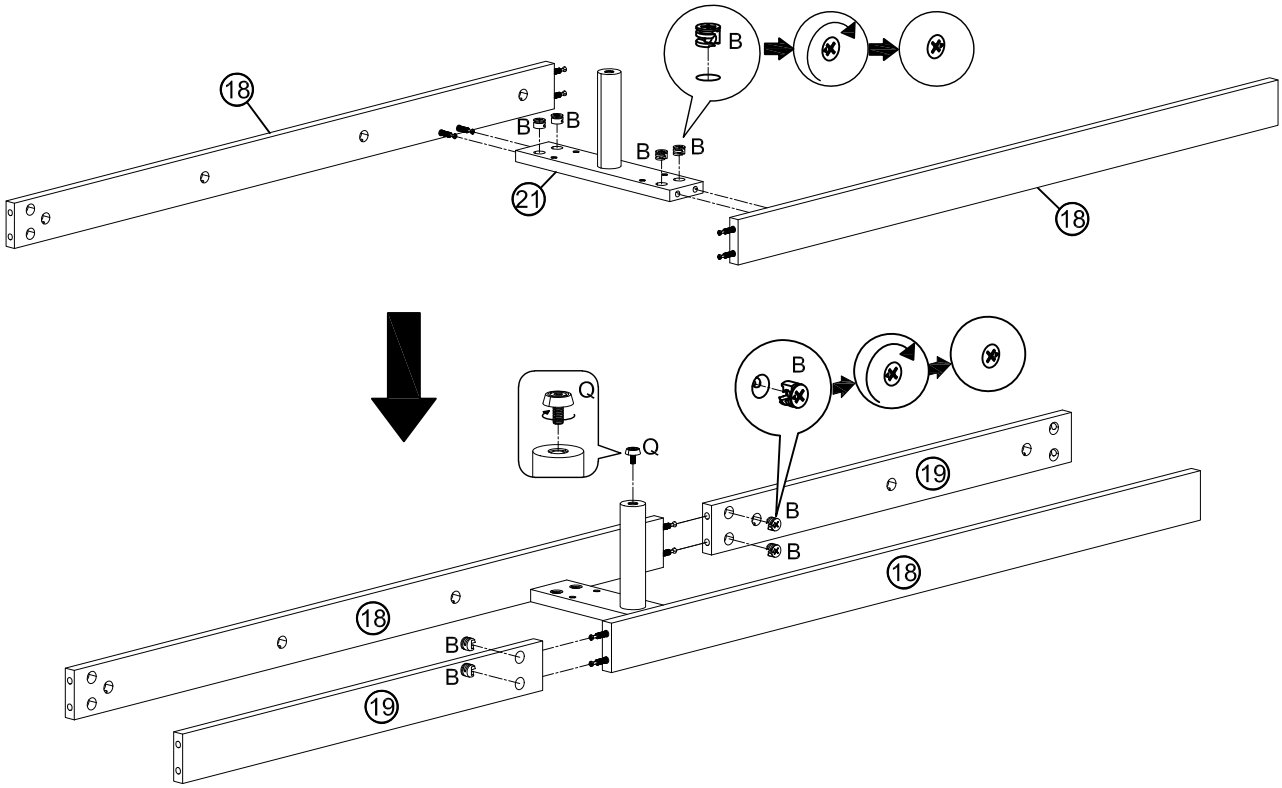

B	x 8
Φ15mm	

Q	x 1
Φ19mm	

22

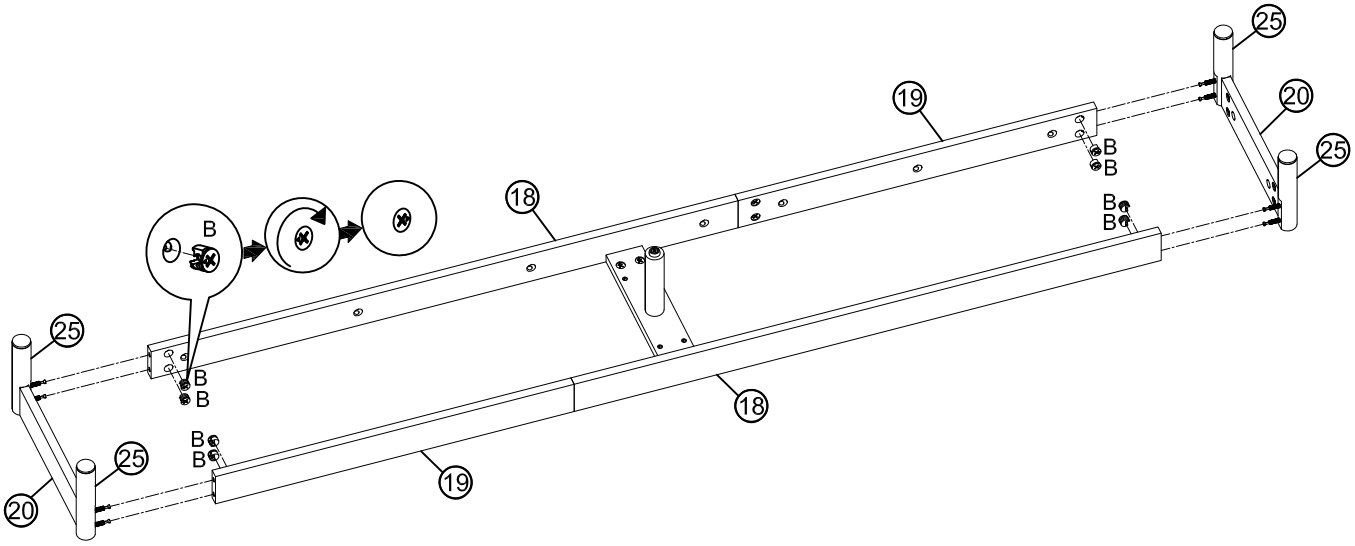

B	x 8
	
Φ15mm	

23

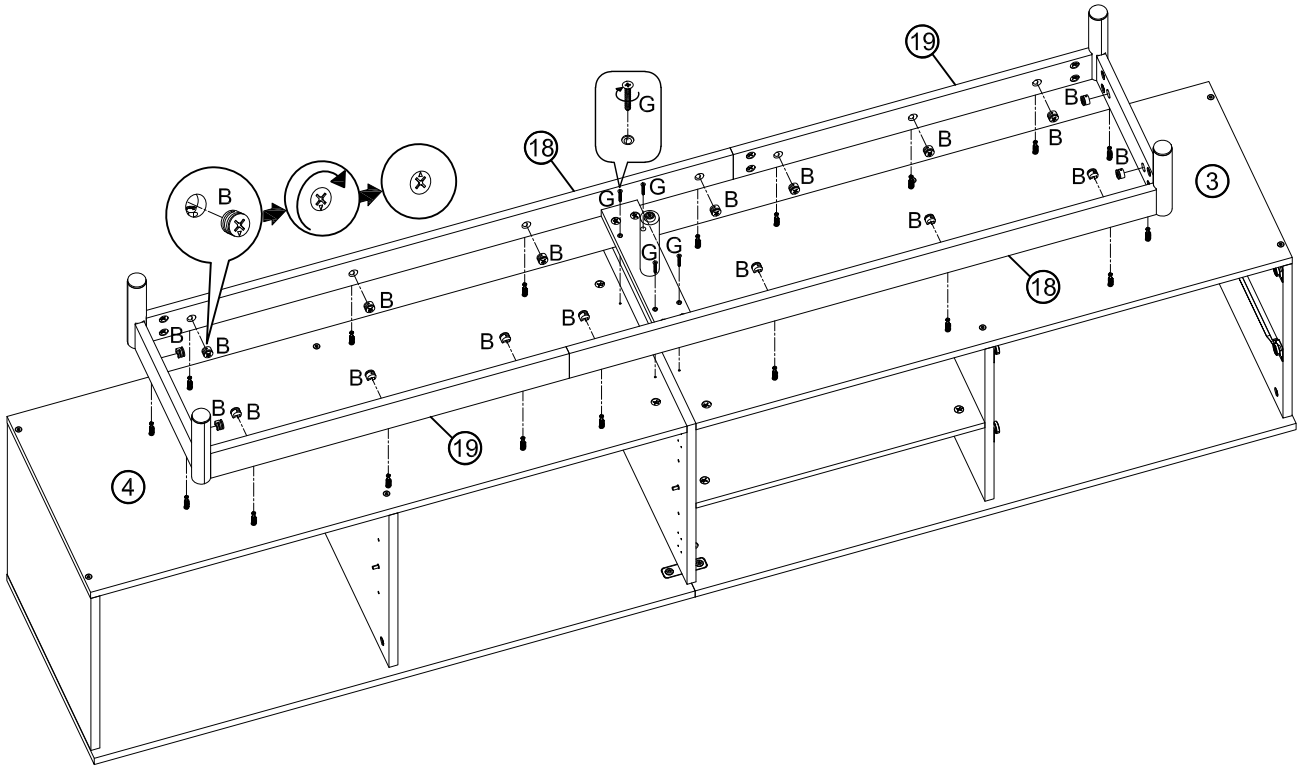

B	x 18
	
Φ15mm	

G	x 4
	
Φ4x25mm	

24

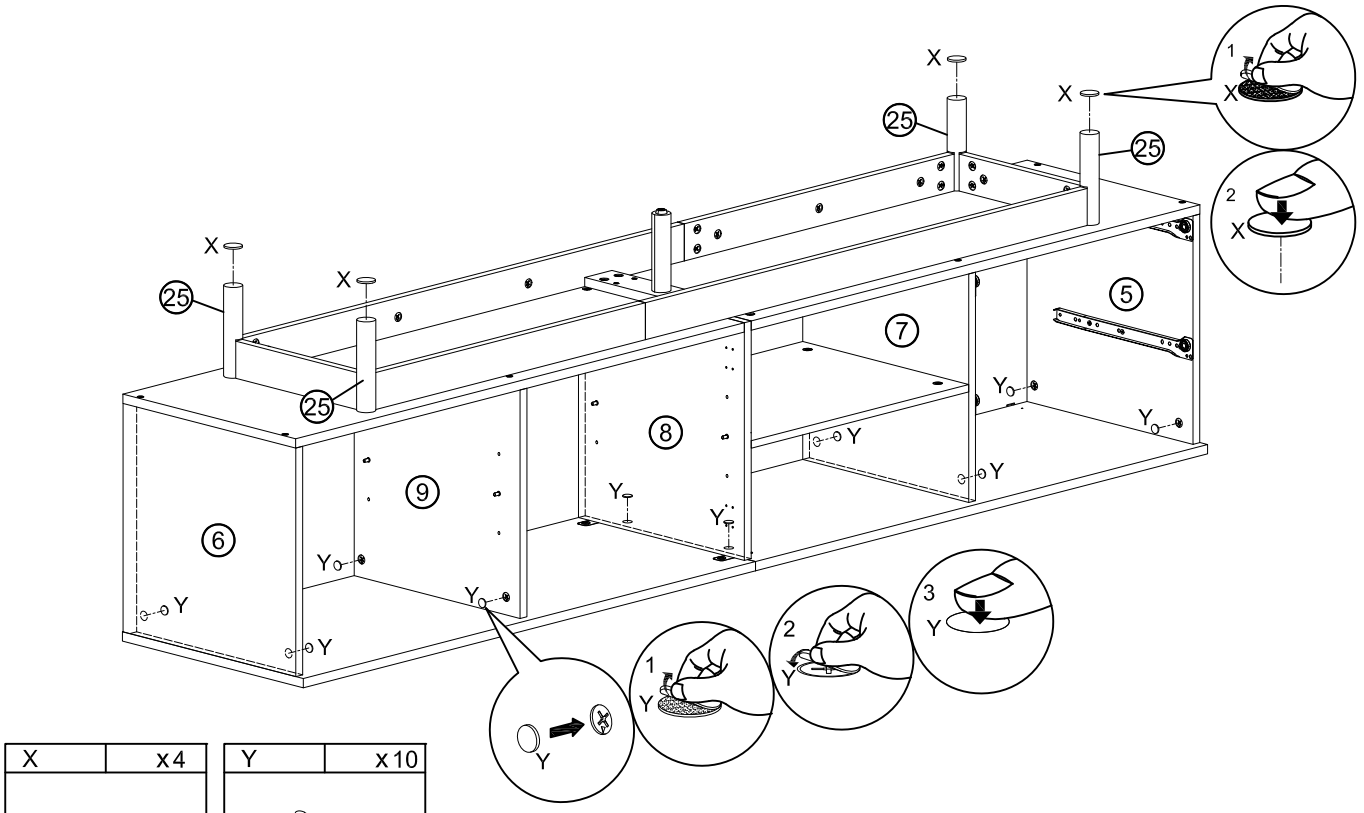

X	x4

Y	x10
	Φ20mm

25

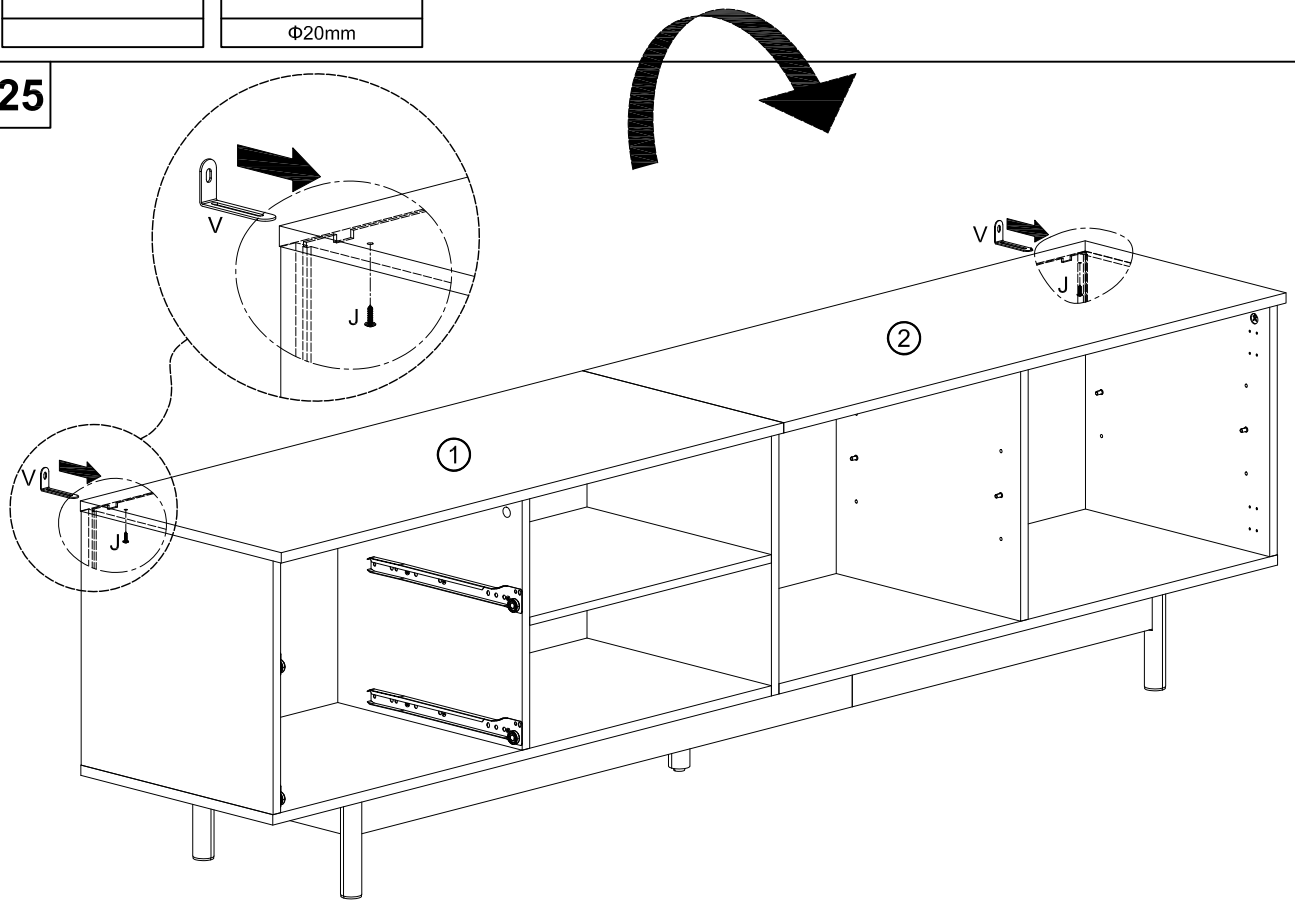

J	x2
	Φ4x14mm

V	x2

26

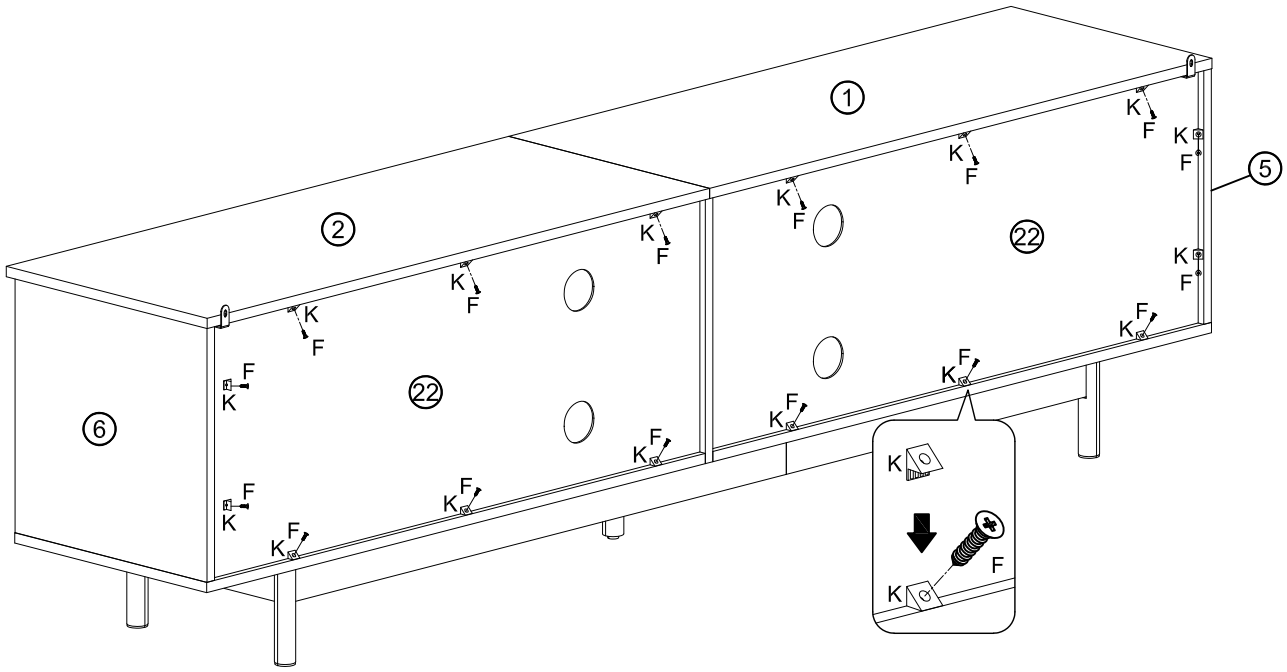

F	x16
Φ3.5x12mm	

K	x16
15x10mm	

27

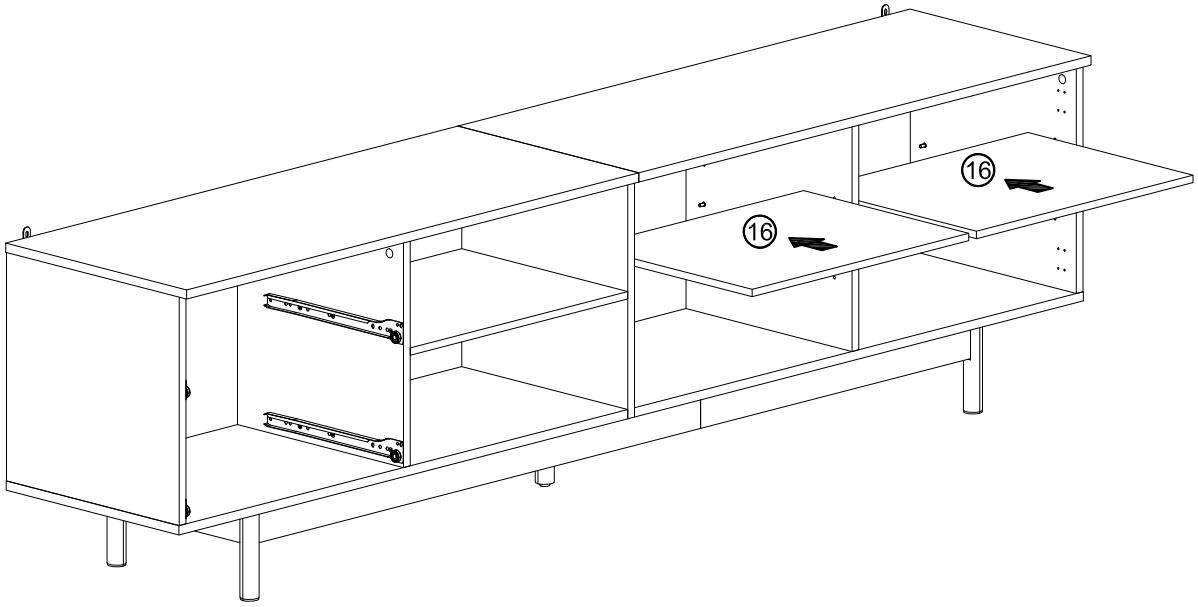

28

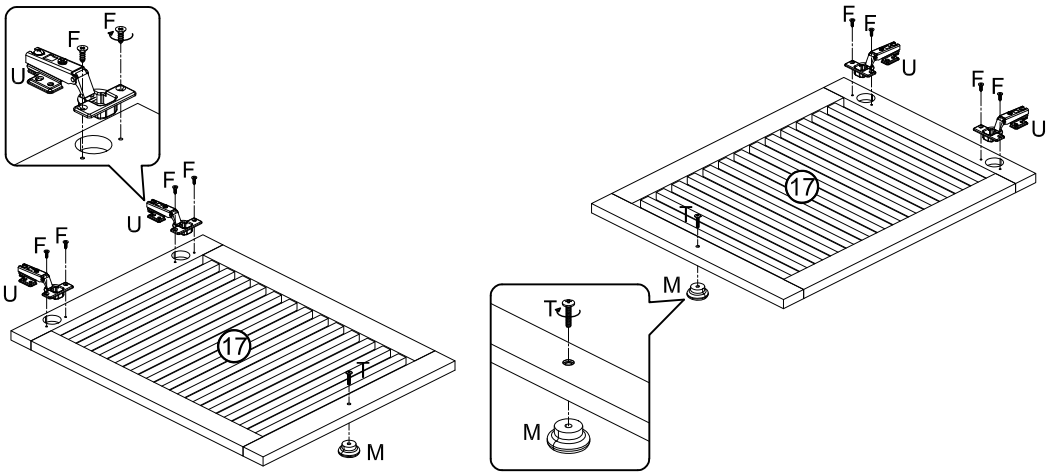

F	x8
Φ3.5x12mm	

M	x2

T	x2
M4x18mm	

U	x4

29

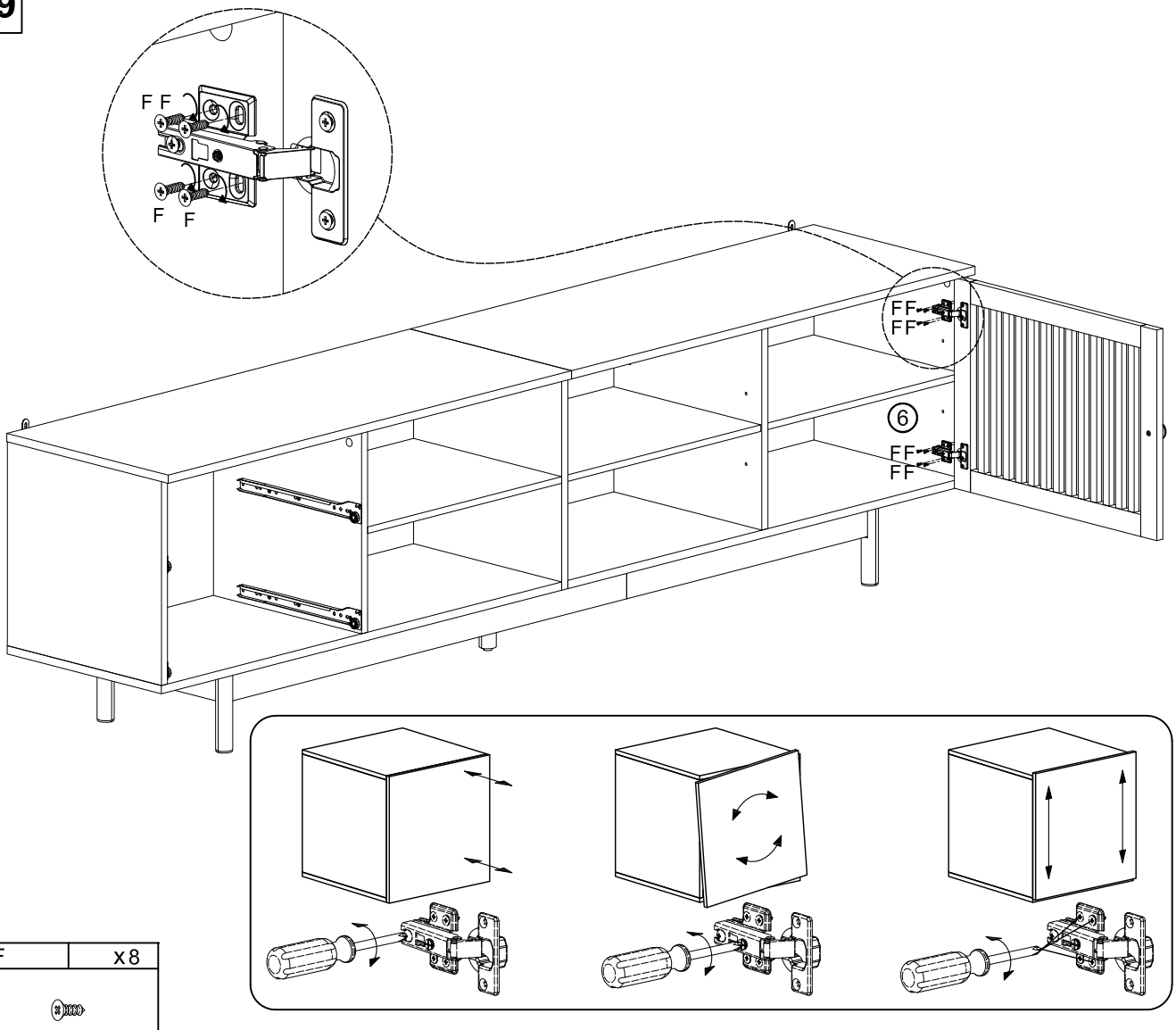

F	x8
Φ3.5x12mm	

30

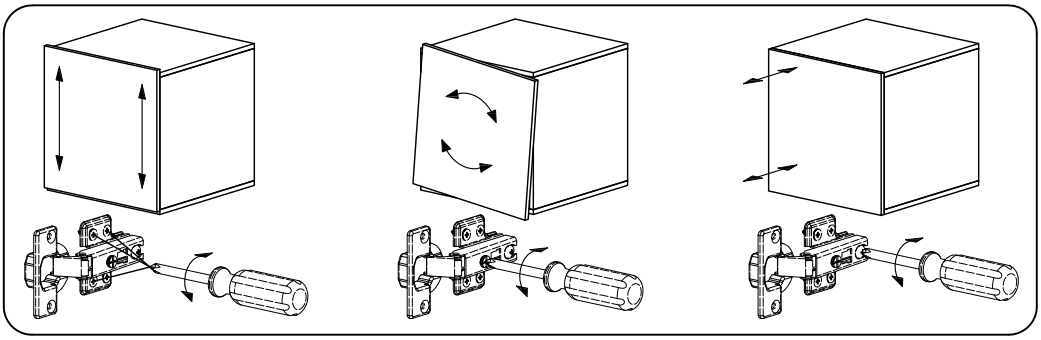

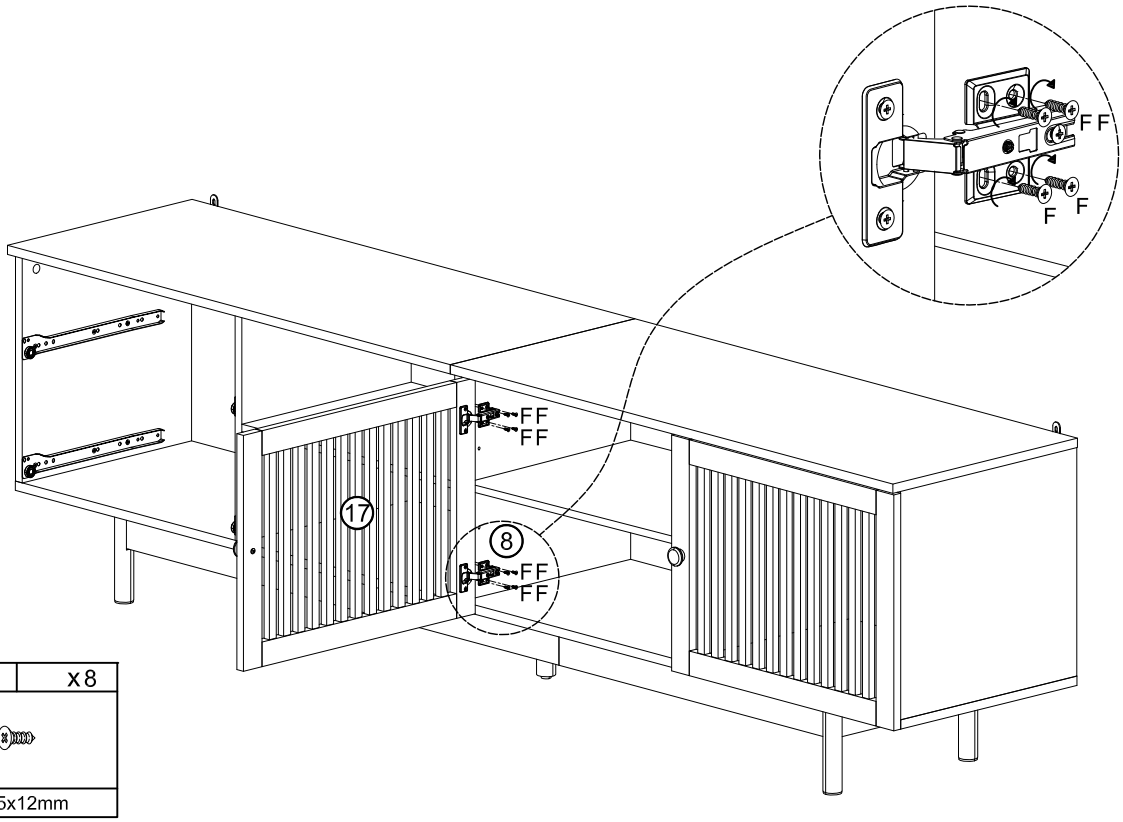

F	x 8
Φ3.5x12mm	

31

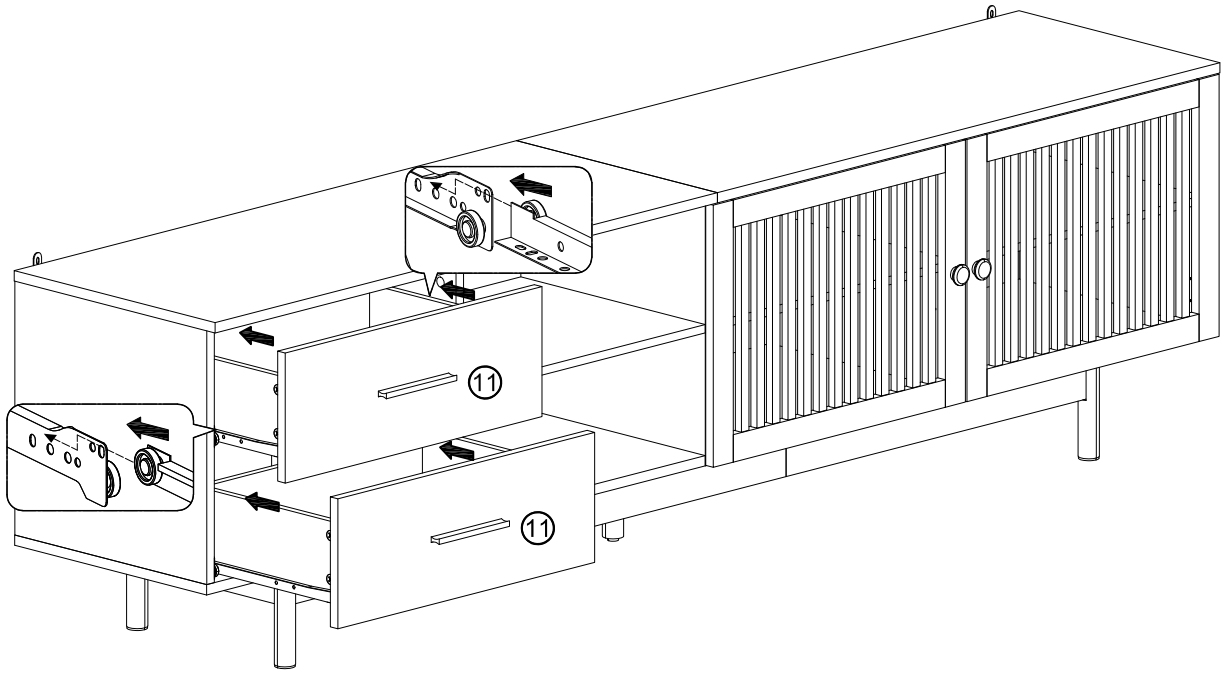

32

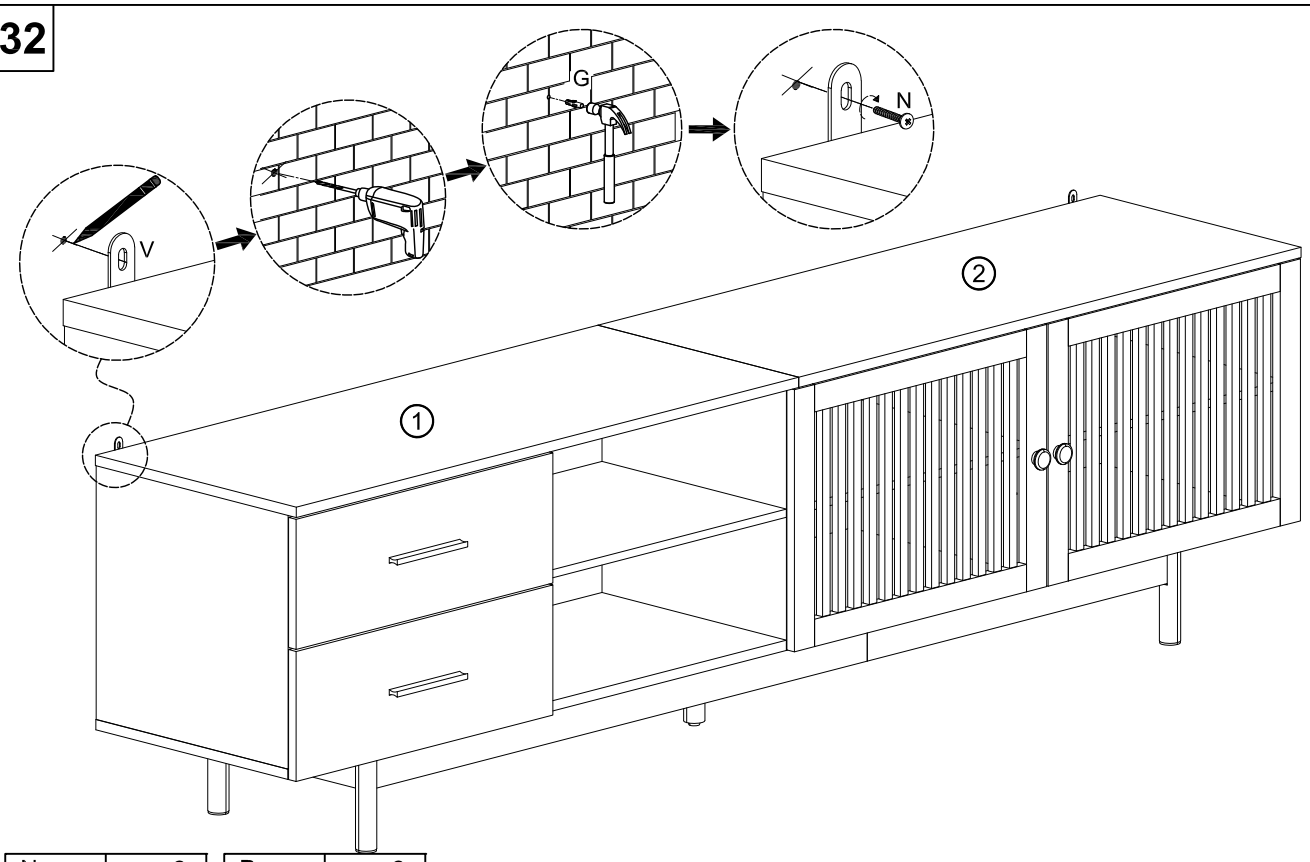

N	x2
	
Φ4x45mm	

P	x2
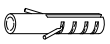	
Φ8x35mm	

33

