Assembly Instructions

US-LGR231A

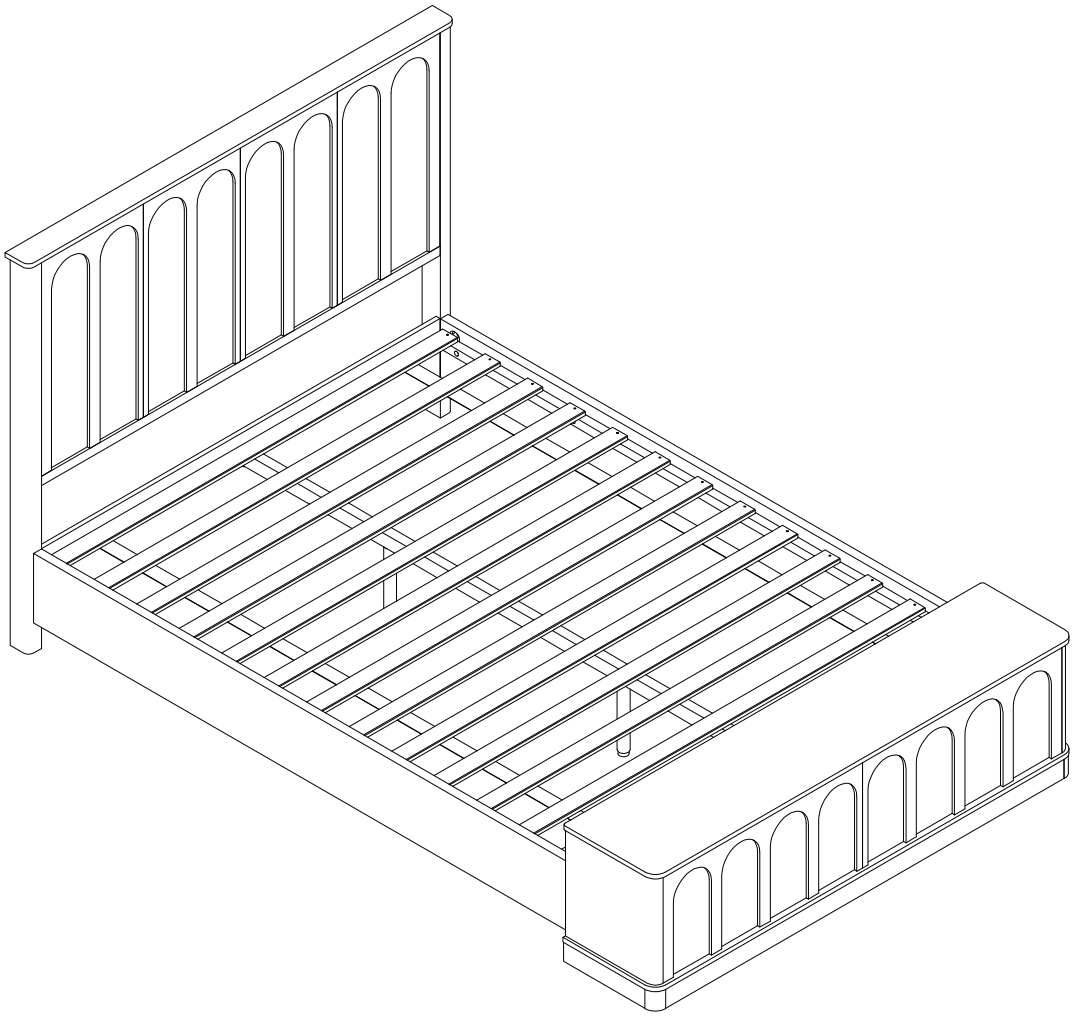

This product is shipped in 2 boxes. If you receive only one box, please wait a few business days for the remaining box to arrive, or contact us for assistance.

General Guidelines

- Please read the following instruction carefully and use the product accordingly.
- Please keep this manual and hand it over when you transfer the product.
- This summary may not include every detail of all variations and considered steps. Please contact us when further information and help are needed.

Notes

- The product is intended for indoor use only. The product must be assembled and used in accordance with the provisions of the manual. Personal injury and/or damage to product may occur if products are used outside of their intended purposes and/or if products have been changed/modified from their original design. The seller does not assume any responsibility or liability with respect to any injury/damage caused by incorrect assembly or improper use.
- Avoid long-term exposure to humid environments to prevent mildew.
- Keep the product away from fire sources and high temperatures. Do not expose the product to direct sunlight.
- Do not place any hot objects on the surface of the product.
- If there are any defective or missing parts after unpacking, please cease assembly immediately and contact us.
- Please assemble the item on a spacious surface and do not place the unwrapped product directly on the ground to avoid product damage.
- Please do not stand or sit on the wooden boards.
- Please wear gloves during the assembly and/or disassembly process to avoid scratches from any sharp edges.
- Please match the corresponding part and fitting based on the part number in the manual.
- If the part does not match with the fitting, please check the piece as specified in this manual.
- During assembly, first loosely align all screws with the corresponding pre-drilled holes and then tighten the screws one by one.
- Periodically inspect screw tightness while the product is in use. If necessary, retighten to ensure structural integrity.
- If you accidentally spill water or another liquid on the surface, immediately wipe clean with a dry towel.
- Please keep the product away from sharp, pointed objects and corrosive substances to prevent product damage.
- Please place this item on level, solid ground during use.

Warnings

- During assembly, keep all small parts out of the reach of children. It may be fatal if swallowed or inhaled.
- Children should not climb or play on the product in order to avoid tipping over the furniture and causing serious injury.
- To avoid the potential dangers of suffocation, please keep all parts and packaging (film, plastic bags, foam, etc.) away from babies and children.
- Keep sharp objects and corrosive items away from the product to avoid any damage or injury.
- Do not shake or move violently during use to avoid tipping over the product.

Parts List(EN)

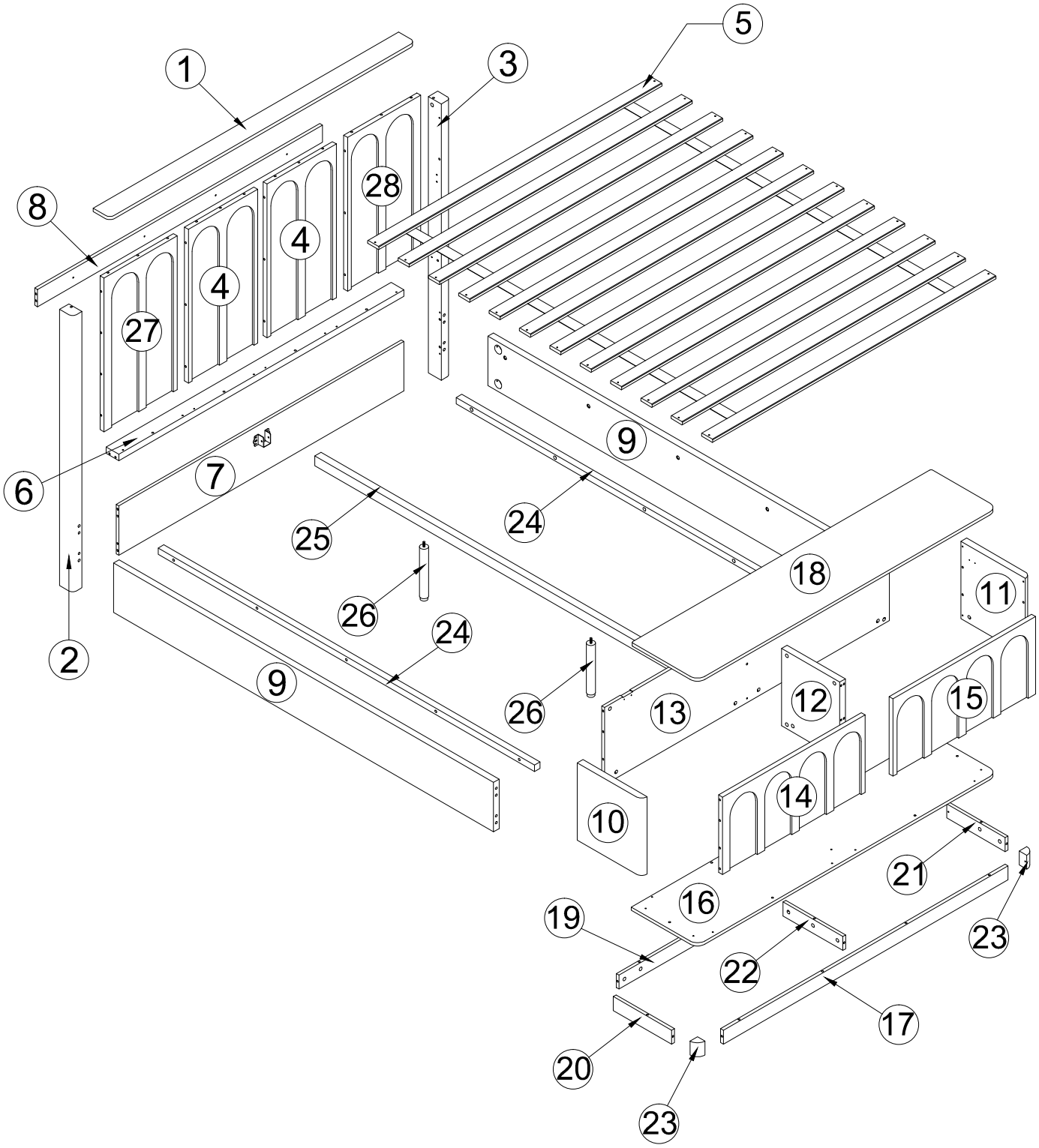

Parts List(EN)

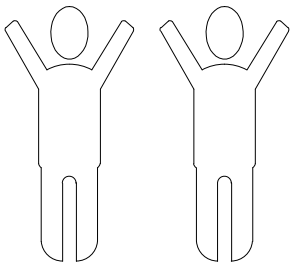

It takes two people to work together to assemble the product.

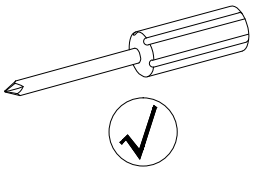

It is recommended to use a screwdriver to assemble the product.

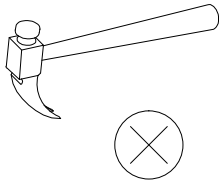

Do not use a hammer, it might damage the board.

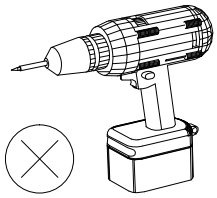

The use of an electric wrench is not recommended.If used, please set the torque to the minimum.

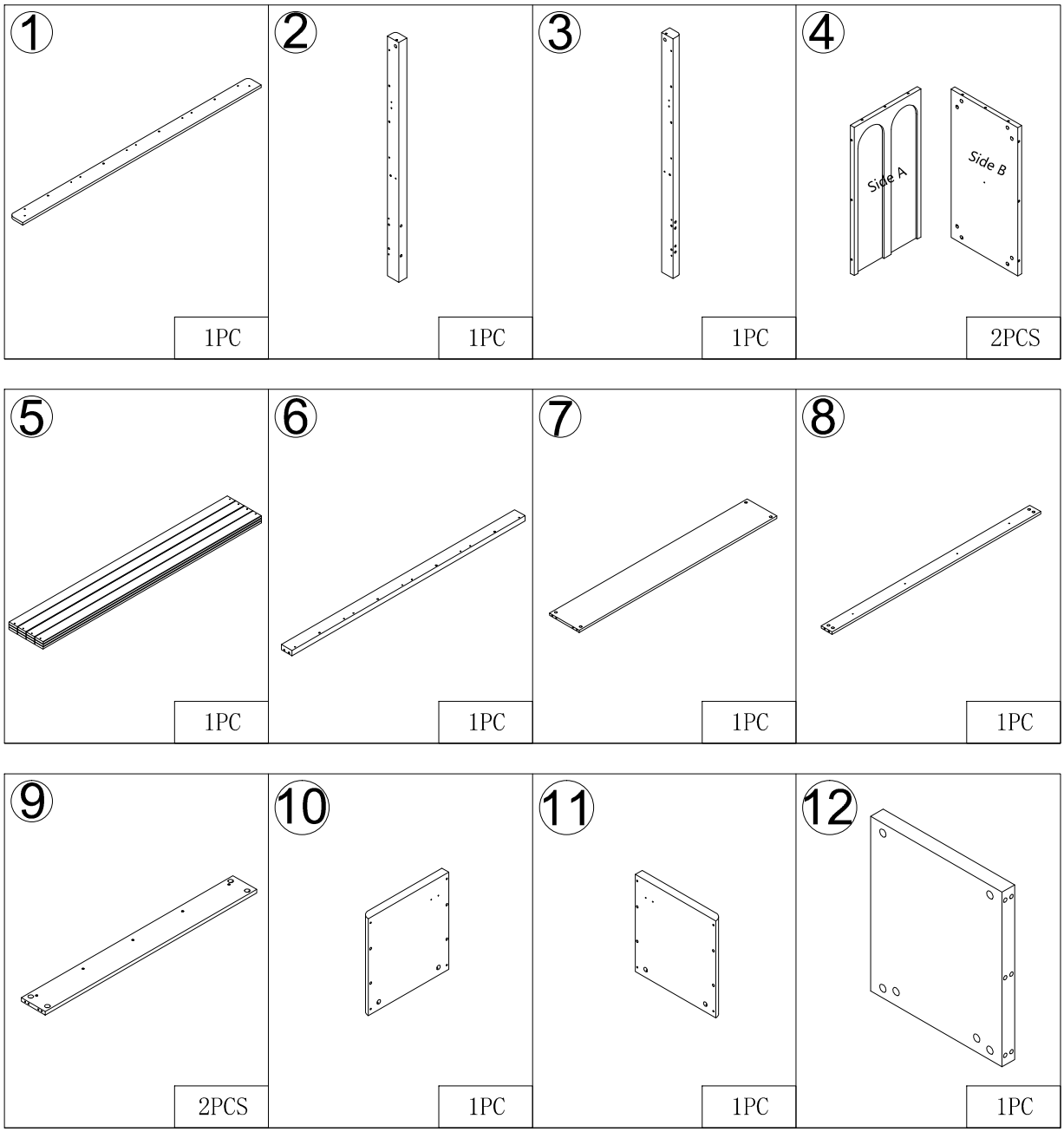

Parts List(EN)

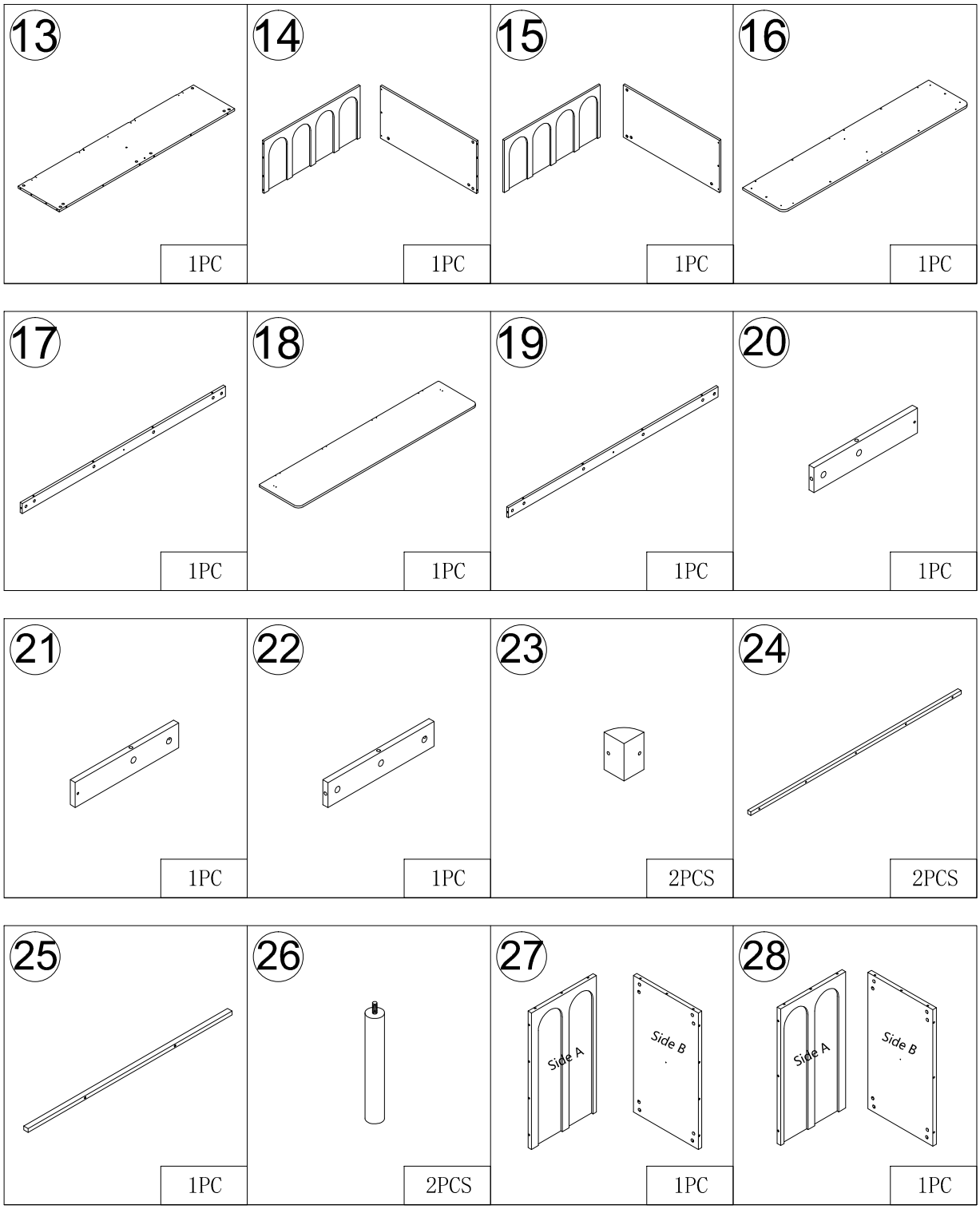

Parts List(EN)

No. A Quantity:79+4 Pcs Cam Lock Dowel 8*28mm 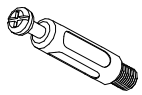	No. B Quantity:91+5 Pcs Cam φ15 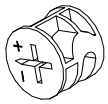	No. C Quantity:14+4 Pcs Sticker Ø20 	No. D Quantity:38+2 Pcs Dowel 8*30mm 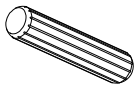
No. E Quantity:6+1 Pcs Double-ended rod 6*64mm 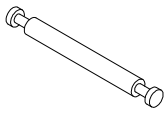	No. F Quantity:32+4 Pcs Screw M3.5*14mm 	No. G Quantity:6+1 Pcs Screw M3.5*25mm 	No. H Quantity:26+2 Pcs Screw M4*30mm 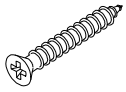
No. I Quantity:8+1 Pcs Foot Pad Ø20 	No. J Quantity:2 Pcs Adjustable Foot 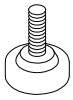	No. K Quantity:8+1 Pcs Dowel 10*40mm 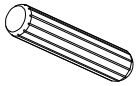	No. L Quantity:4+1 Pcs Fully Threaded Screw M8*80mm 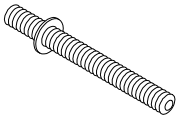
No. M Quantity:8+1 Pcs Gasket 29*15*7 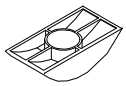	No. N Quantity:8+1 Pcs Hex nut M8 	No. O Quantity:1 Pc Wrench 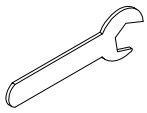	No. P Quantity:4 Pcs Hinge 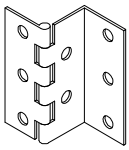

Parts List(EN)

No. Q Quantity:1 Sets Support rod 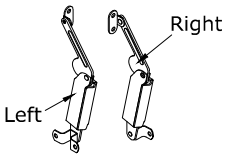	No. R Quantity:2 Pcs U-shaped hardware 86*45*30 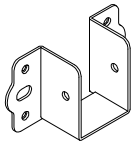	No. S Quantity:10+1 Pcs Screw M8*35mm 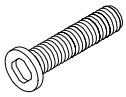	No. T Quantity:1 Pc Allen Key 5# 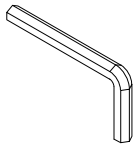
No. U Quantity:1 Pc Screwdriver 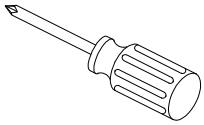	No. V Quantity:2+3 Pcs Rubber Bumpers Ø10 	No. W Quantity:4+1 Pcs Glove 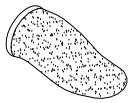	No. X Quantity:4+1 Pcs Screw M8*130mm 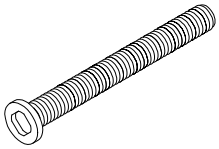
No. Y Quantity:4+1 Pcs Gasket 			

Instructions For Fastening CAM-BOLT and CAM-LOCK

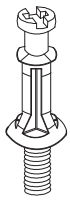

CAM-BOLT

CAM-LOCK

Tools Required

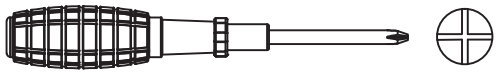

INSERTING AND TIGHTENING CAM-BOLT

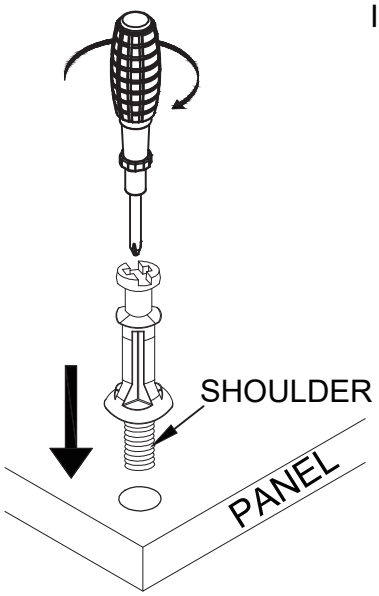

Place Cam-bolt on pre-drilled hole and screw in vertically

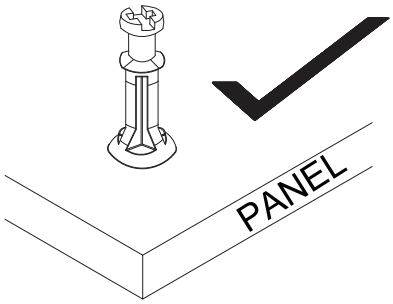

Shoulder is flushed (on the same level) with the panel.

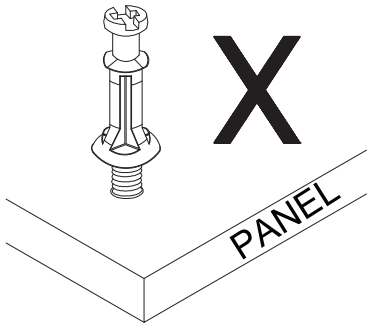

Shoulder is above the panel.

Place Cam-bolt on the designated pre-drilled holes on the panel. Use a Phillips Screwdriver to screw-in Cam-bolt vertically until shoulder is flushed (on the same level) with panel.

INSERTING CAM-LOCK

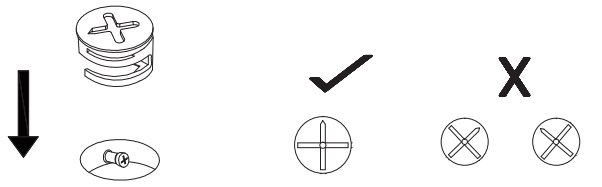

Insert Cam-lock with arrow align to Cam-bolt head

CORRECT

WRONG

Align the arrow on the Cam-lock to the Cam-bolt head and insert the Cam-lock. Ensure Cam-lock is fully inserted.

TIGHTENING CAM-LOCK

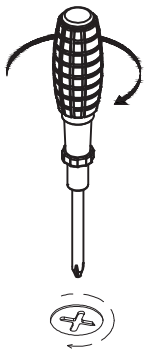

Use a Flat-head Screwdriver to turn Cam-lock clockwise so it locks onto the head of the Cam-bolt. Turn until it is snug (about 3/4 of a turn) -- over-tightening could damage Cam-lock or/and Cam-bolt.

STEP 1

Make sure the side with four holes faces outward.

27

E

4

D

E

E

4

D

E

E

28

D

E

Make sure the side with four holes faces outward.

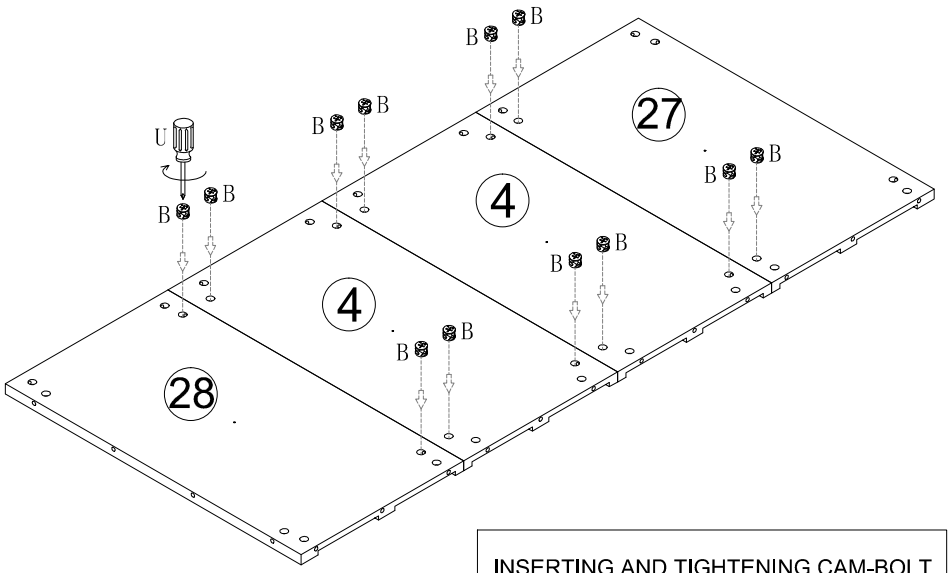

Align the arrow on the Cam-lock to the Cam-bolt head and insert the Cam-lock. Ensure Cam-lock is fully inserted.

INSERTING AND TIGHTENING CAM-BOLT

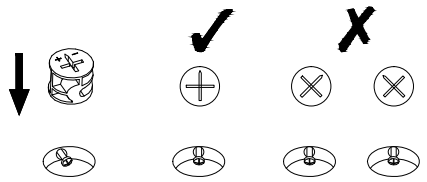

Insert Cam-lock with arrow align to Cam-bolt head

CORRECT

WRONG

	B×12PCS
	D×3PCS
	E×6PCS

STEP 2

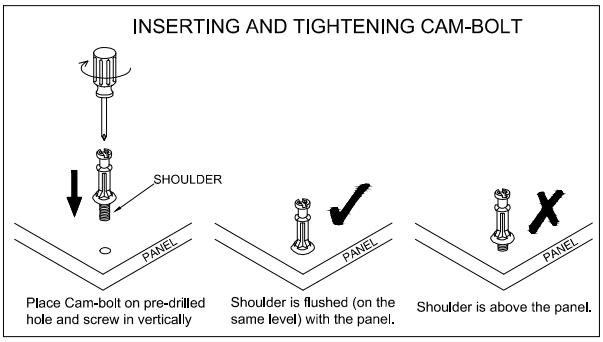

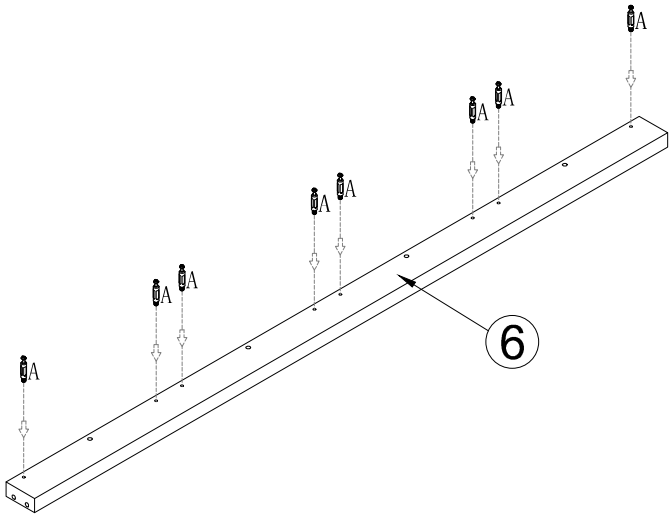

Align the arrow on the Cam-lock to the Cam-bolt head and insert the Cam-lock. Ensure Cam-lock is fully inserted.

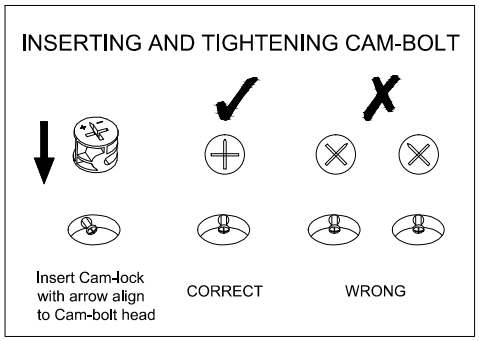

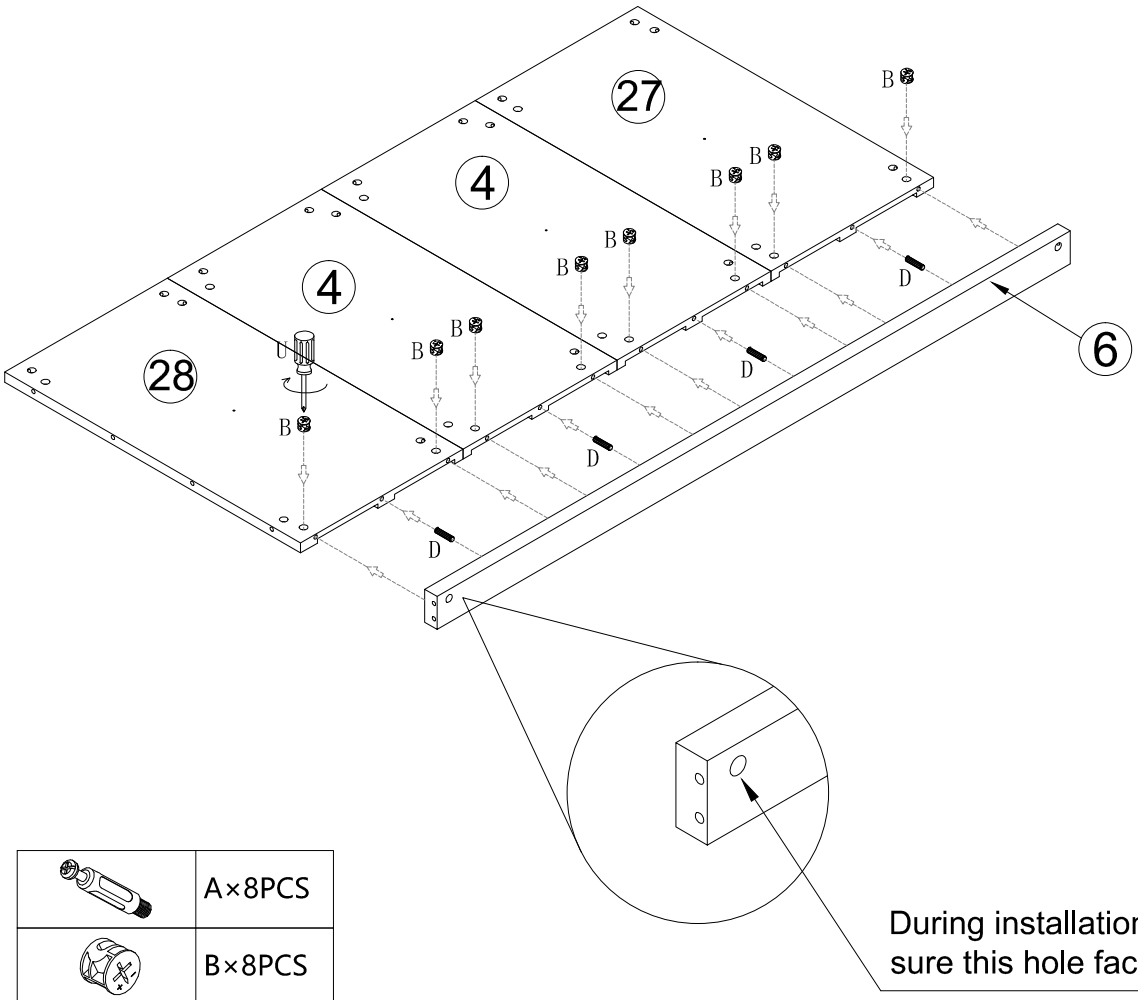

During installation, make sure this hole faces upward.

	A×8PCS
	B×8PCS
	D×4PCS

STEP 3

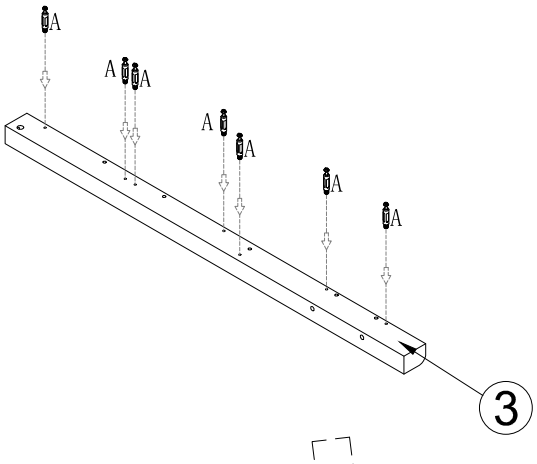

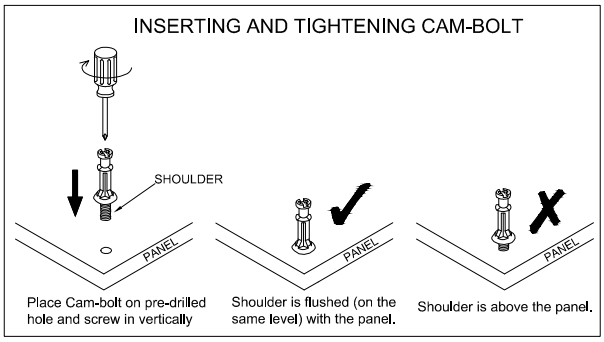

Align the arrow on the Cam-lock to the Cam-bolt head and insert the Cam-lock. Ensure Cam-lock is fully inserted.

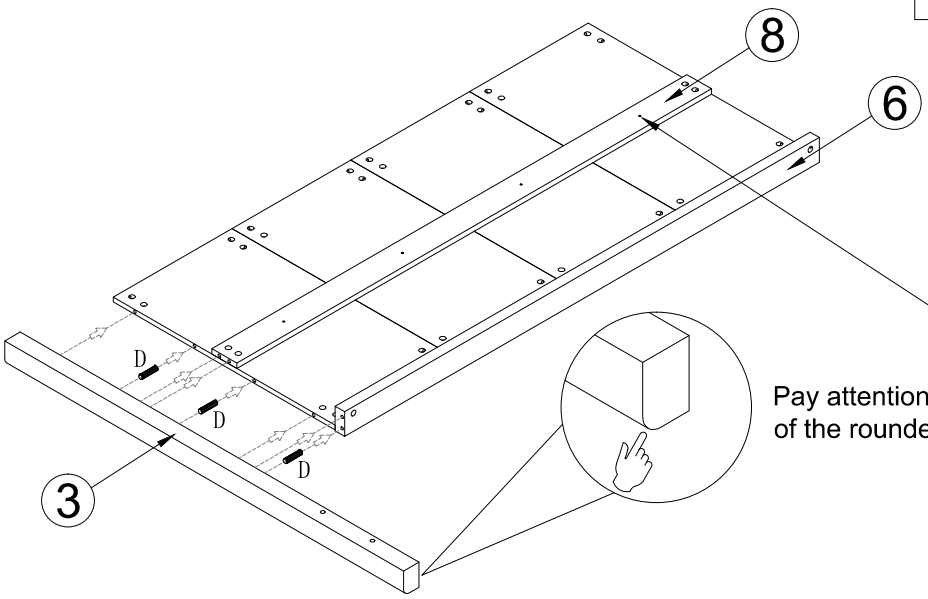

Do not secure this hole at this stage; afterinstallation, secure it in a later step.

Pay attention to the orientation of the rounded corner.

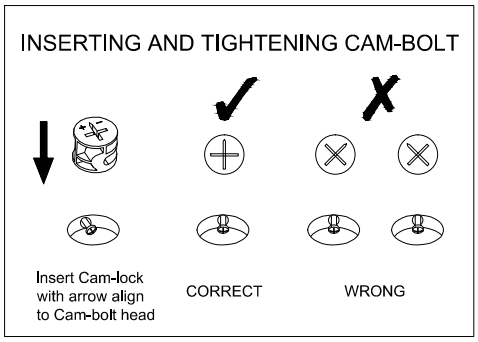

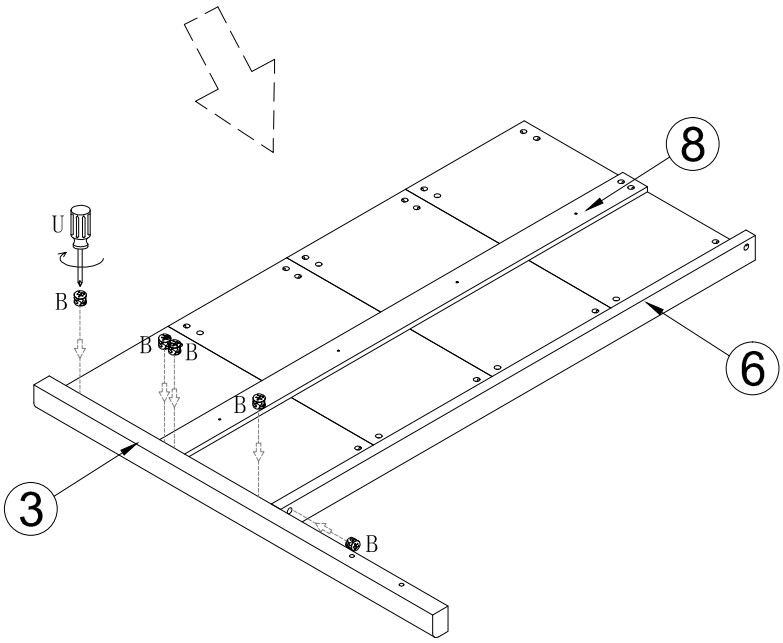

	A×7PCS
	B×5PCS
	D×3PCS

STEP 4

Note: After installation, the narrow edge of the hole margin should face upwards.

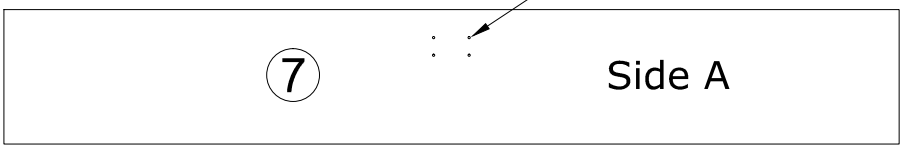

Note that when assembling the No.7 plate, the middle locating hole is facing down.

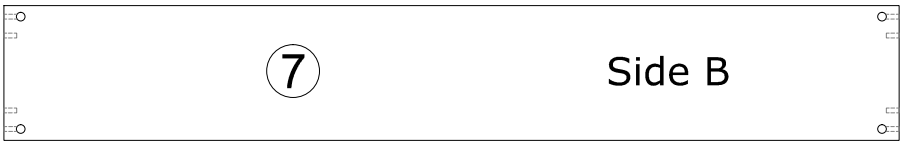

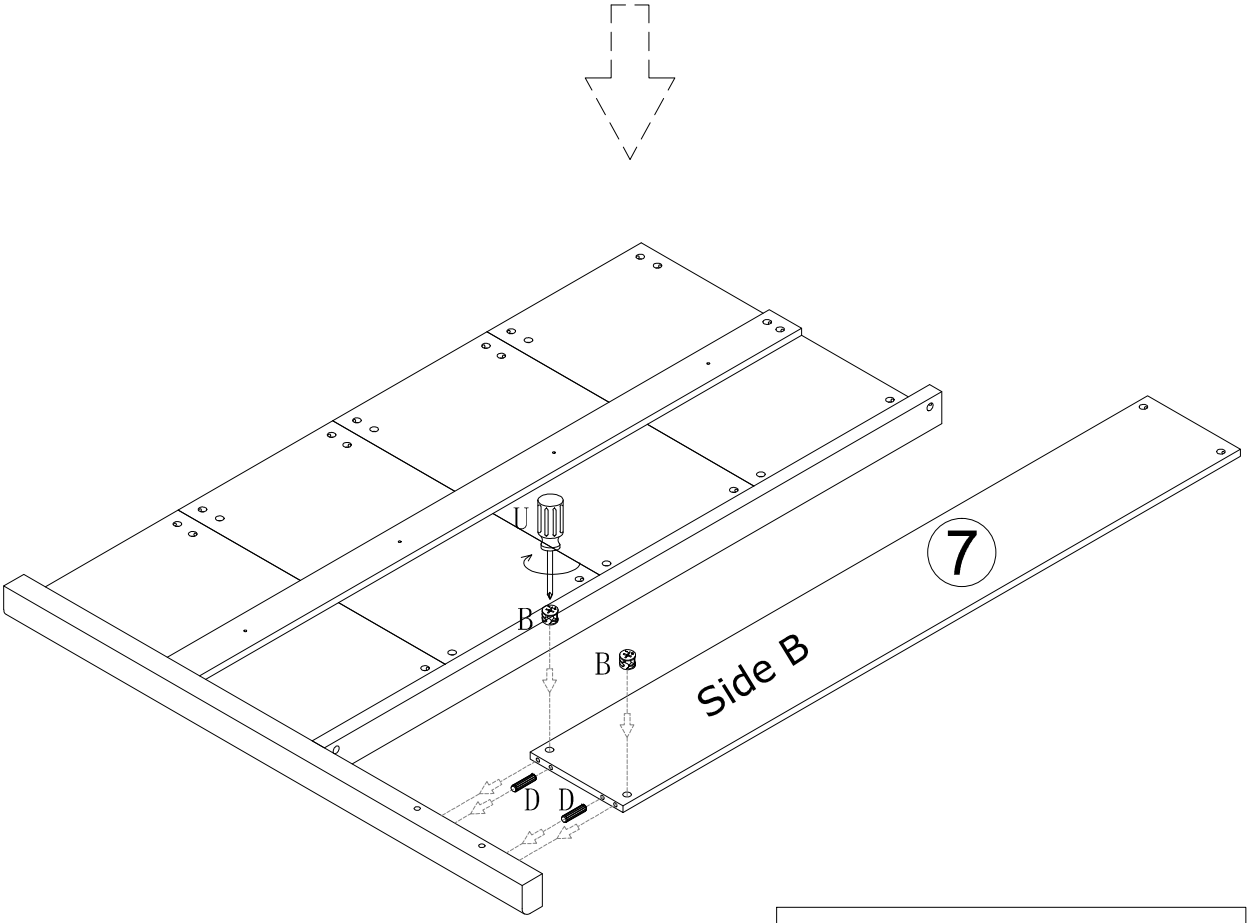

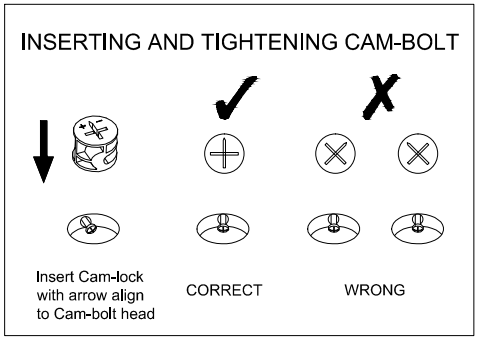

	B×2PCS
	D×2PCS

STEP 5

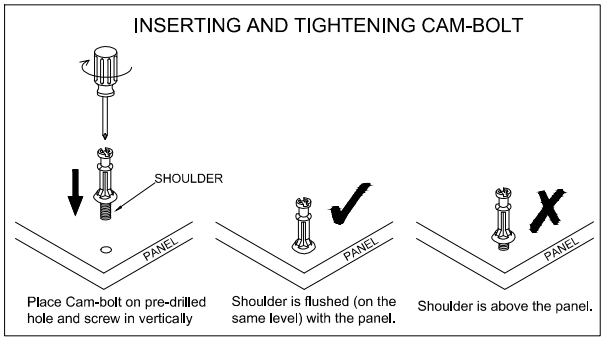

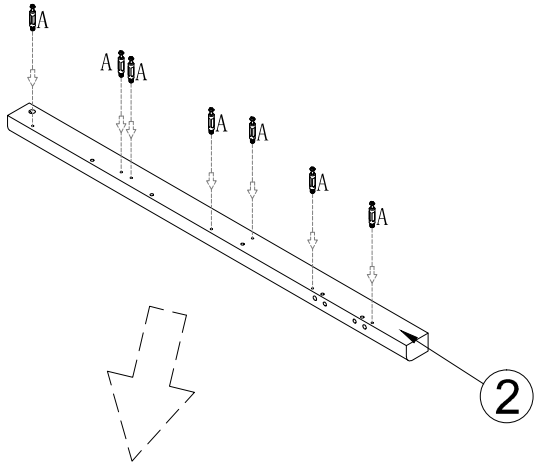

Align the arrow on the Cam-lock to the Cam-bolt head and insert the Cam-lock. Ensure Cam-lock is fully inserted.

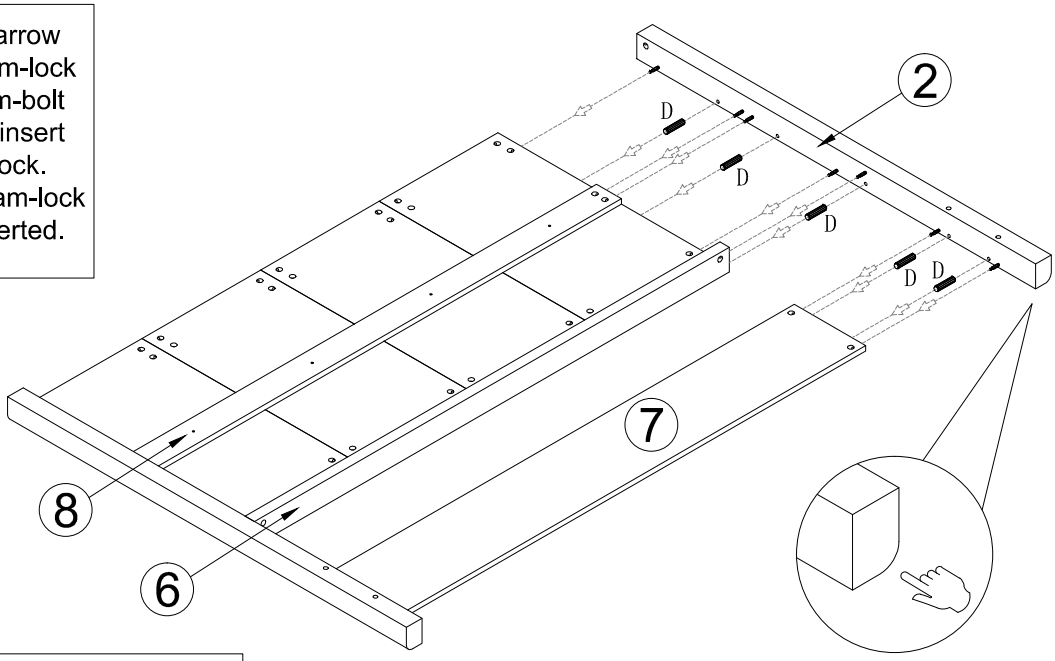

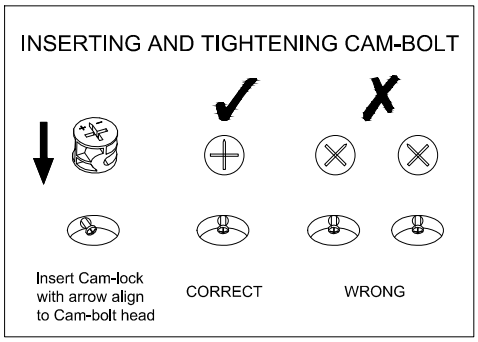

Pay attention to the orientation of the rounded corner.

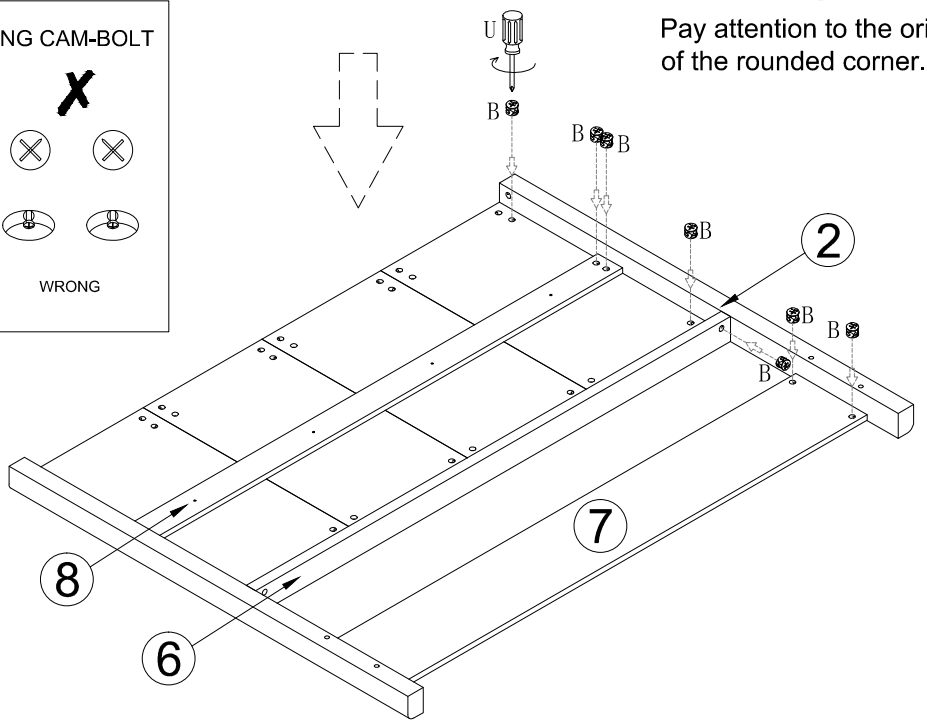

	A×7PCS
	B×7PCS
	D×5PCS

STEP 6

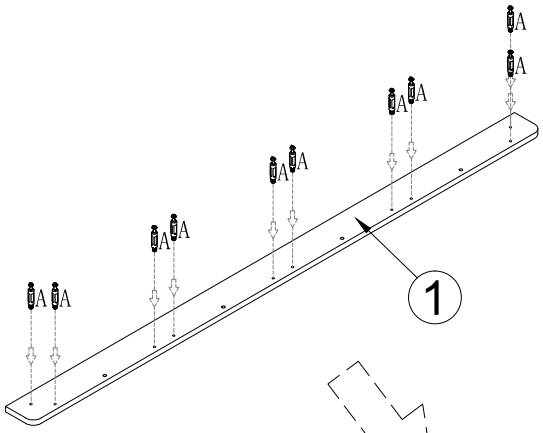

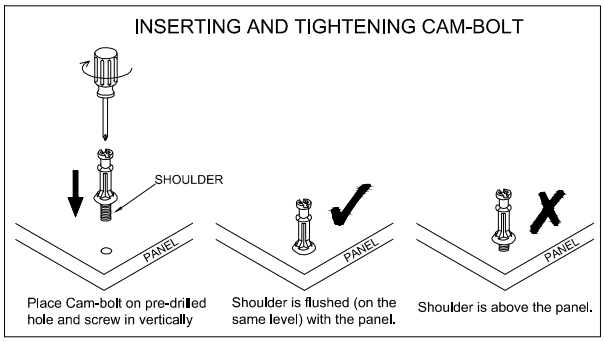

This step requires two people to cooperate for installation. When installing, please slightly lift the head of the bed to facilitate installation.

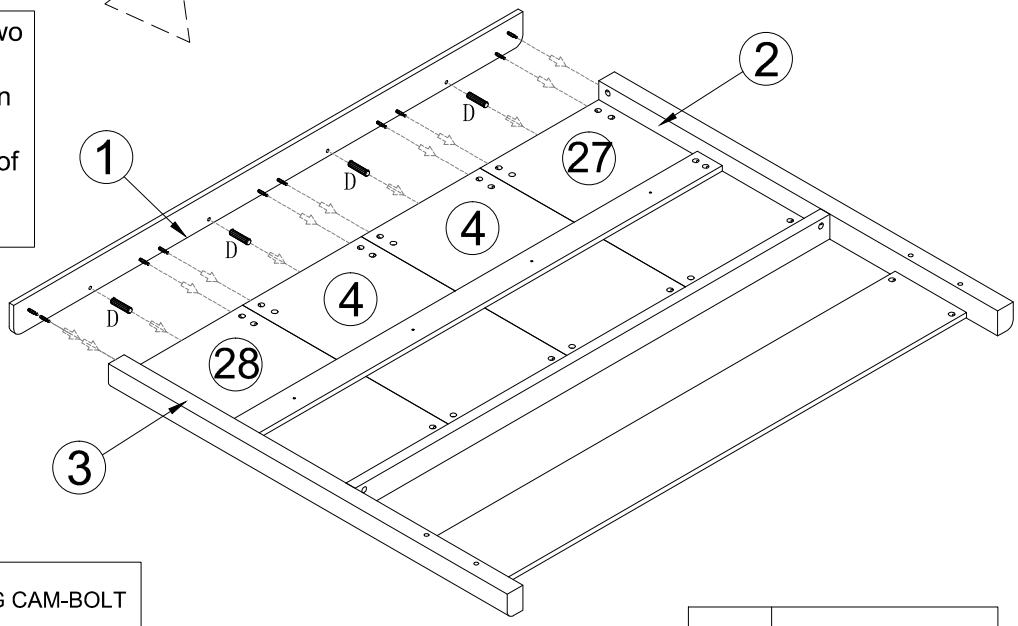

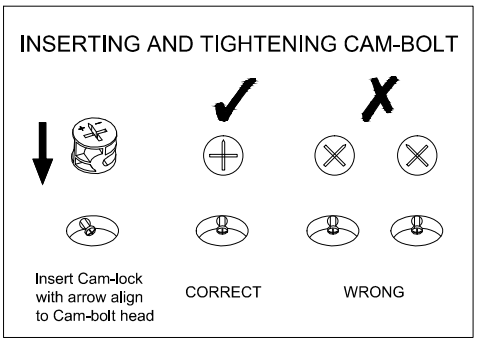

Align the arrow on the Cam-lock to the Cam-bolt head and insert the Cam-lock. Ensure Cam-lock is fully inserted.

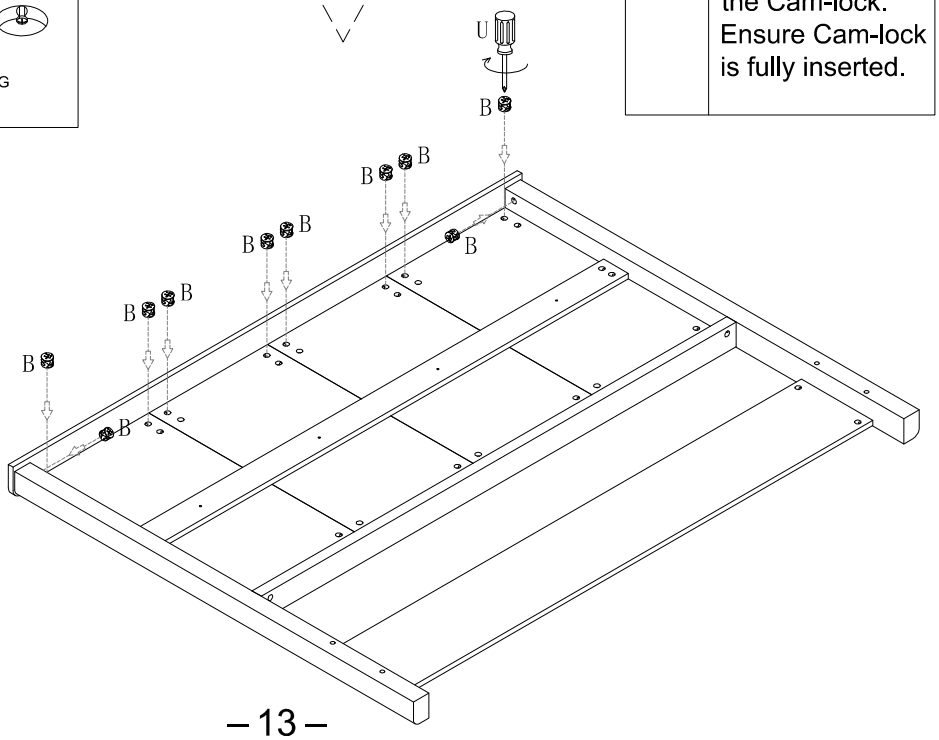

	A×10PCS
	B×10PCS
	D×4PCS

STEP 7

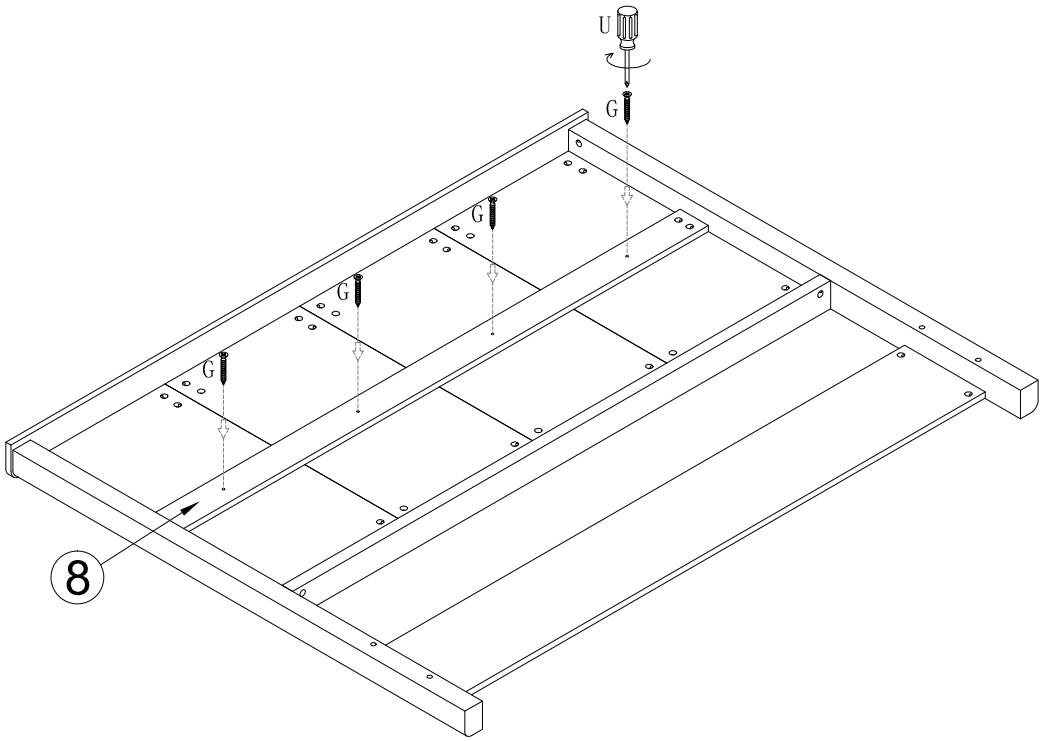

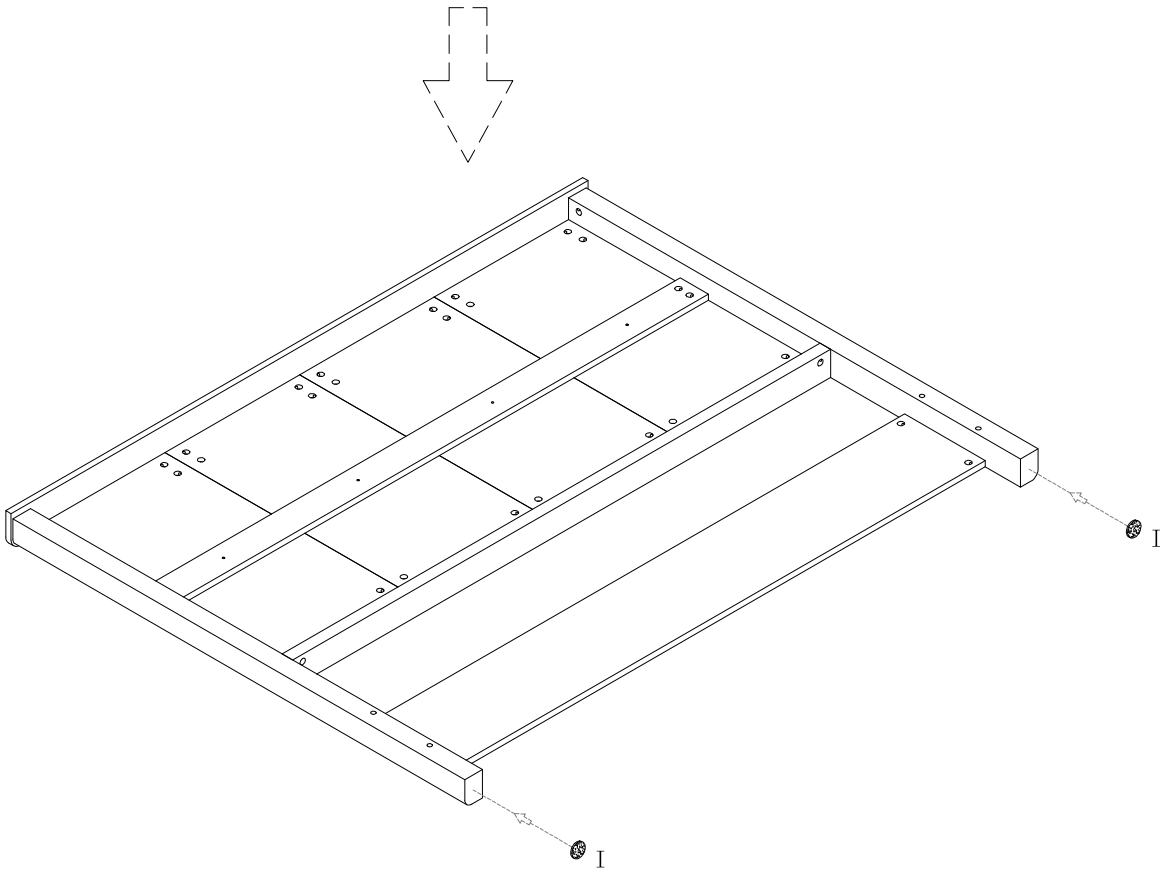

	G×4PCS
	I×2PCS

STEP 8

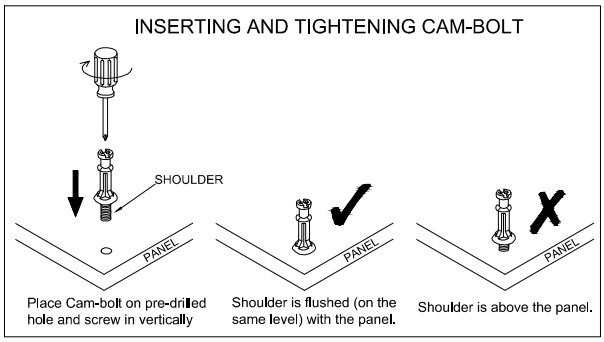

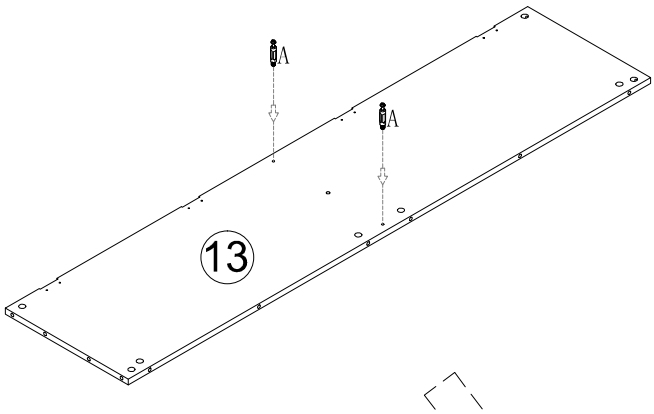

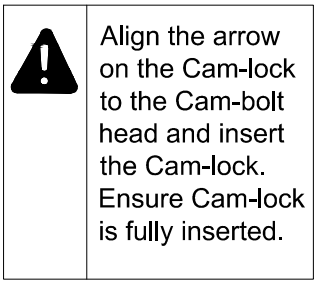

Align the arrow on the Cam-lock to the Cam-bolt head and insert the Cam-lock. Ensure Cam-lock is fully inserted.

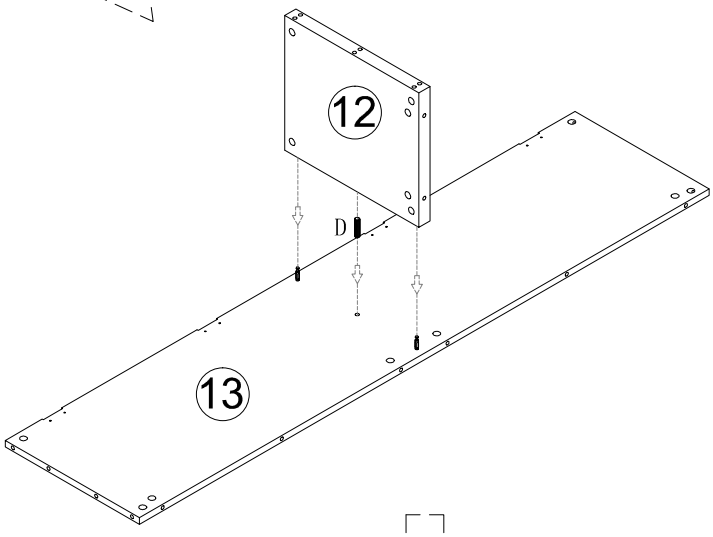

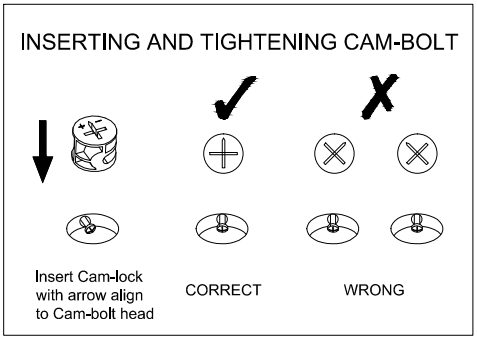

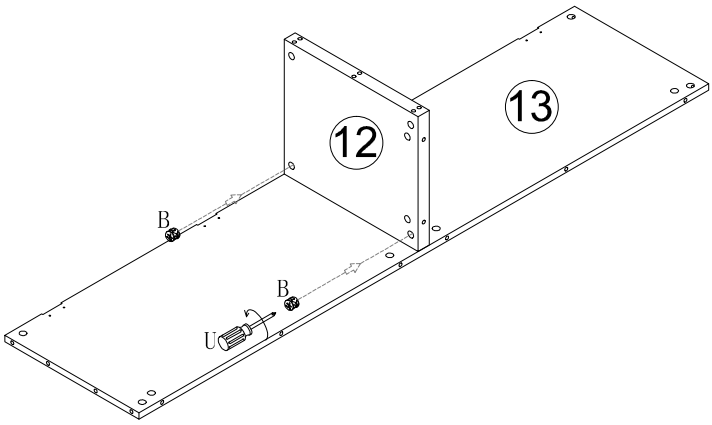

	A×2PCS
	B×2PCS
	D×1PCS

STEP 9

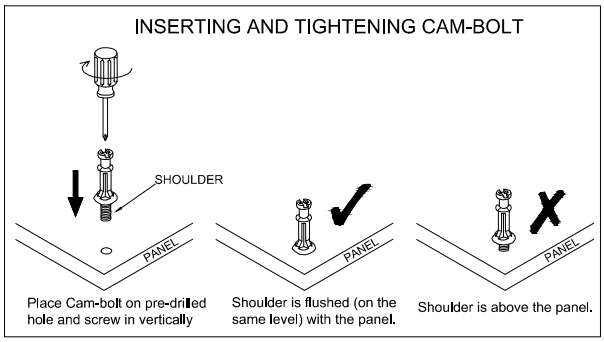

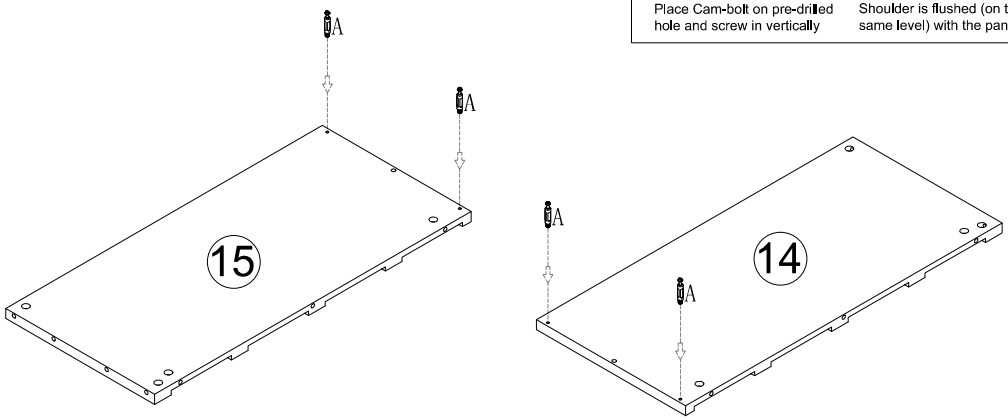

Align the arrow on the Cam-lock to the Cam-bolt head and insert the Cam-lock. Ensure Cam-lock is fully inserted.

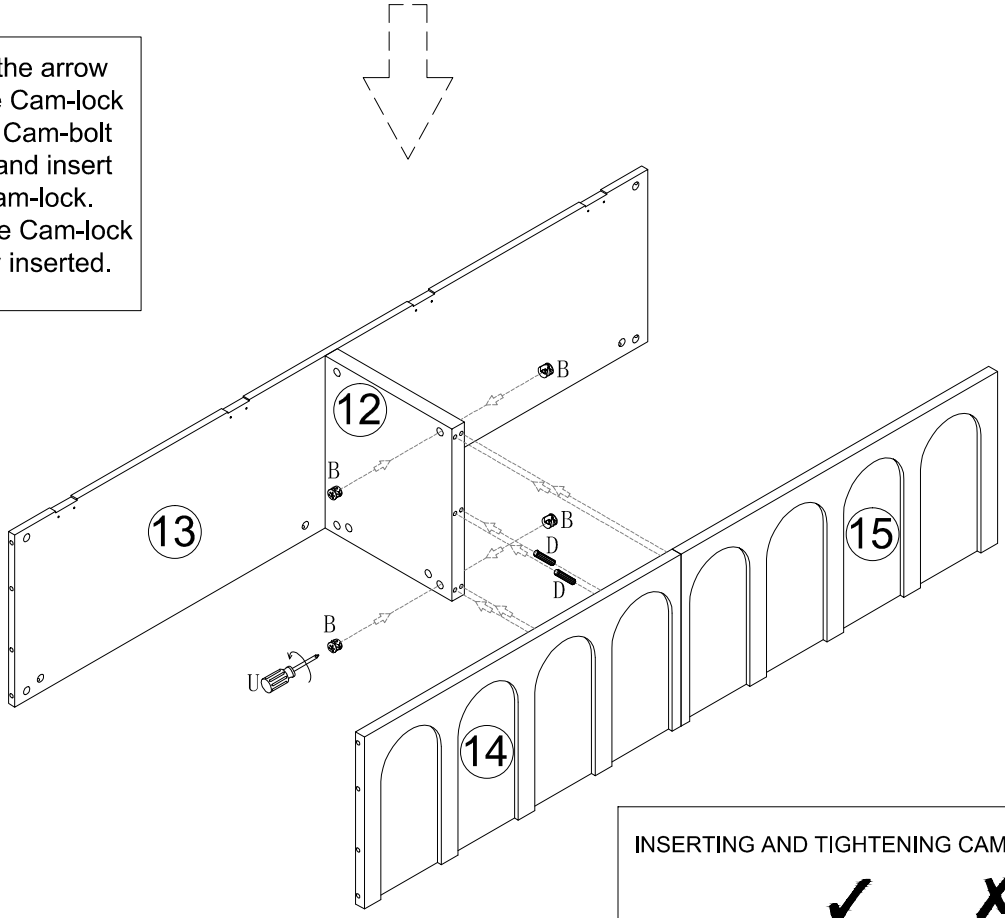

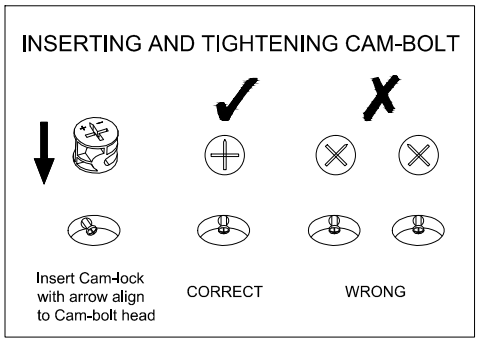

	A×4PCS
	B×4PCS
	D×2PCS

STEP 10

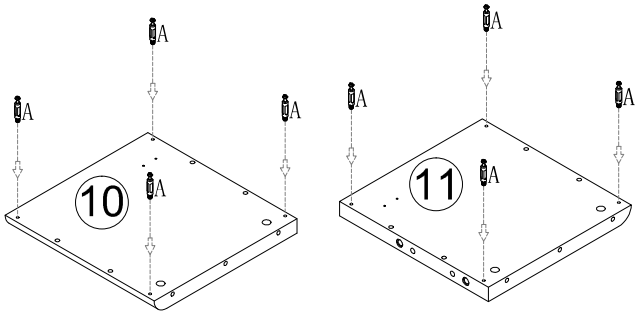

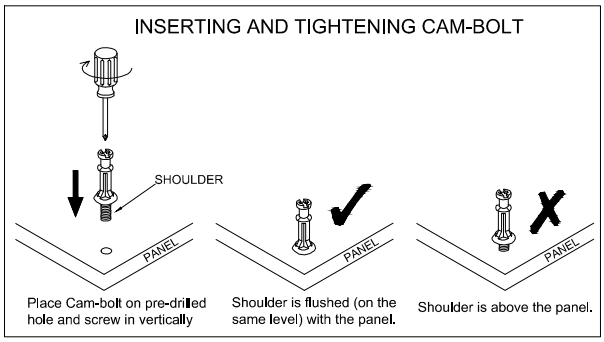

Align the arrow on the Cam-lock to the Cam-bolt head and insert the Cam-lock. Ensure Cam-lock is fully inserted.

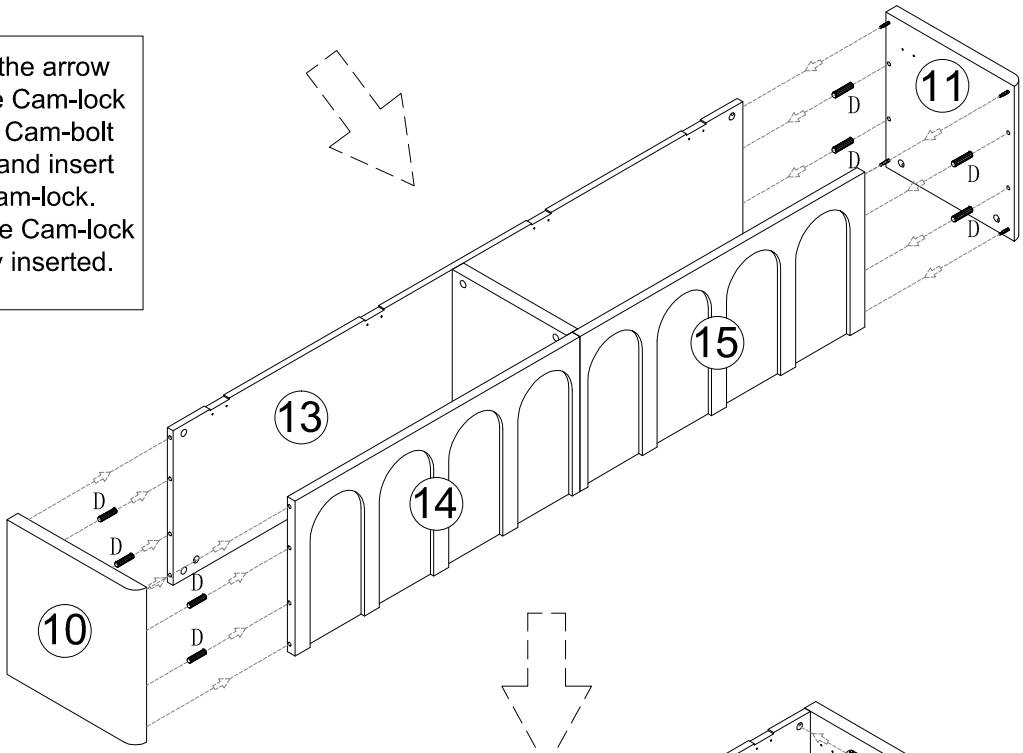

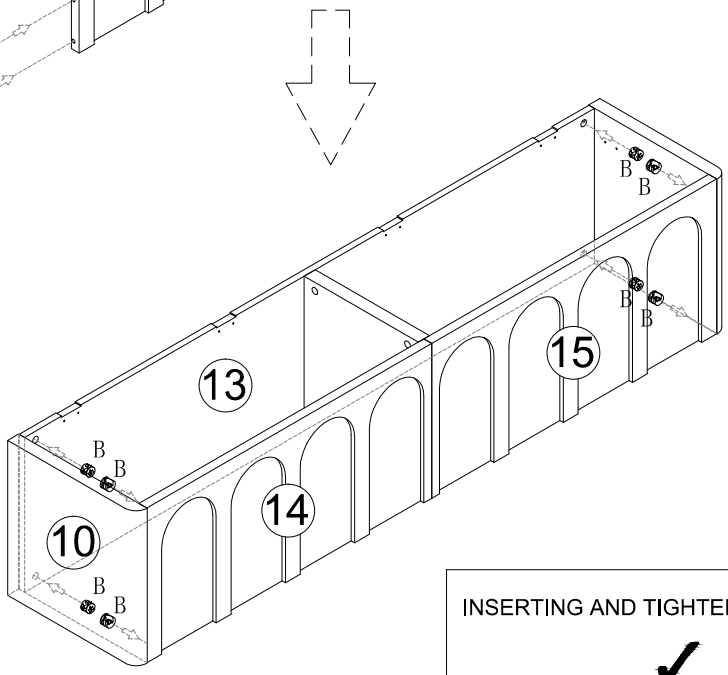

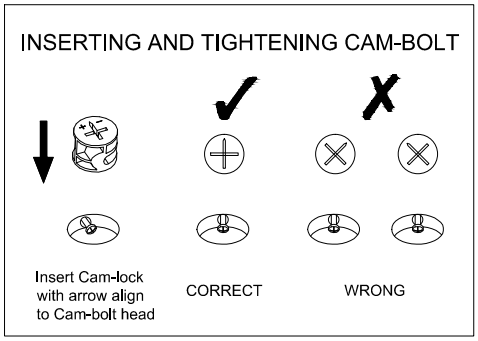

	A×8PCS
	B×8PCS
	D×8PCS

STEP 11

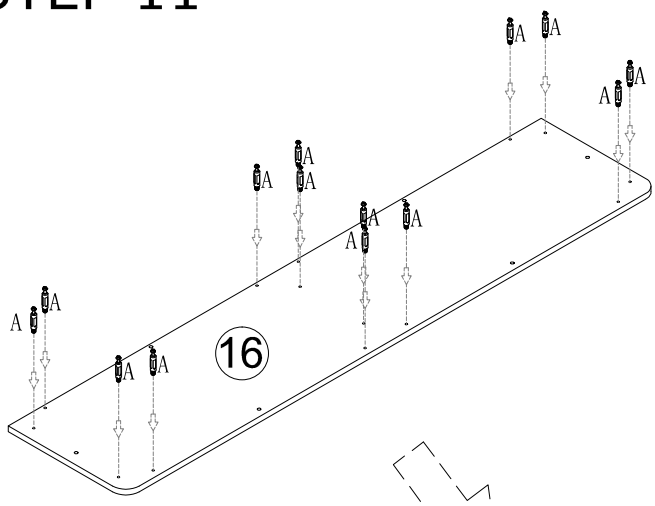

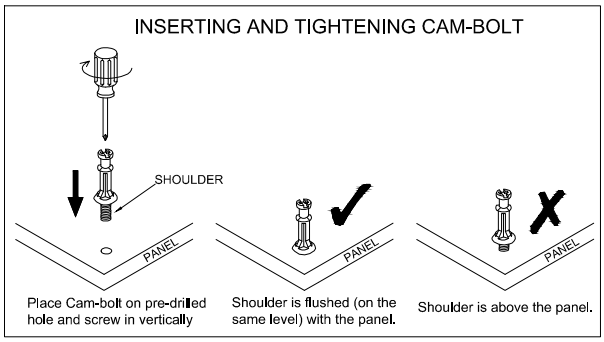

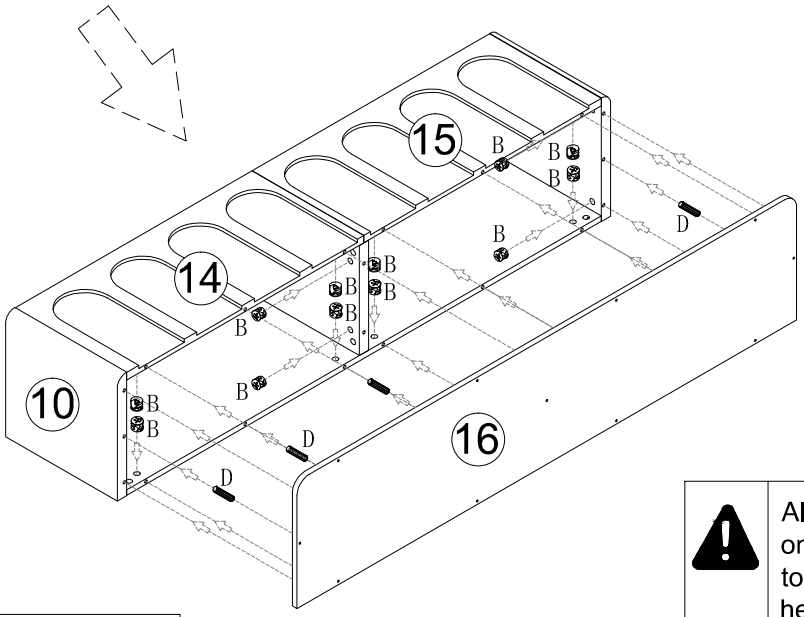

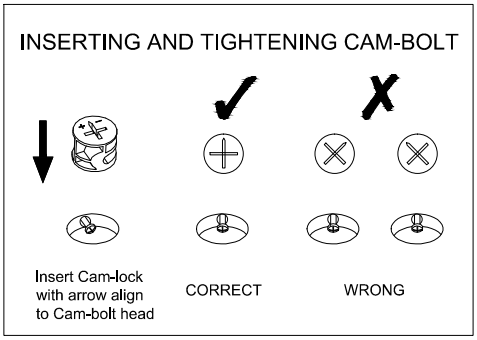

Align the arrow on the Cam-lock to the Cam-bolt head and insert the Cam-lock. Ensure Cam-lock is fully inserted.

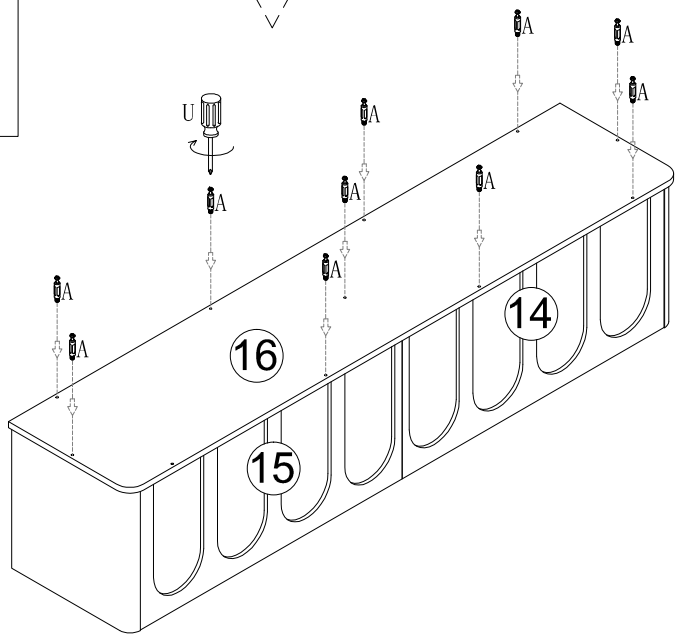

	A×25PCS
	B×14PCS
	D×6PCS

STEP 12

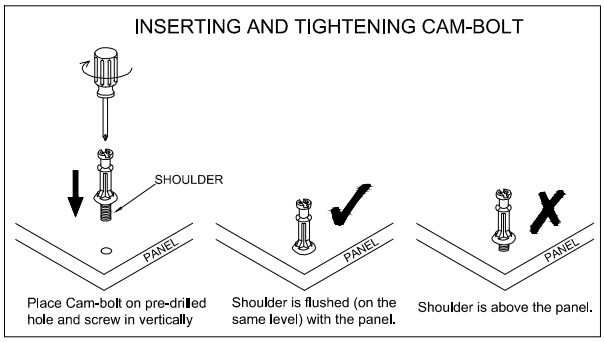

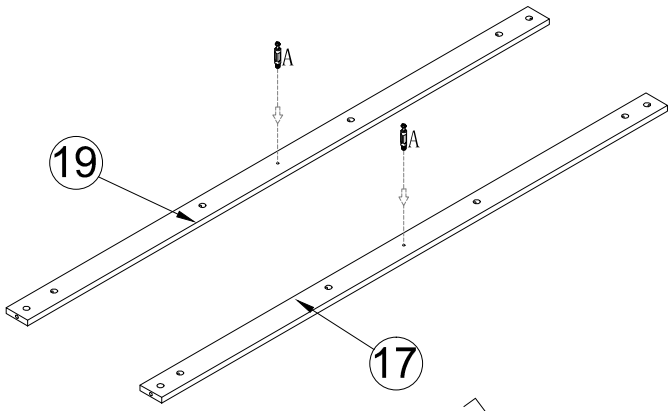

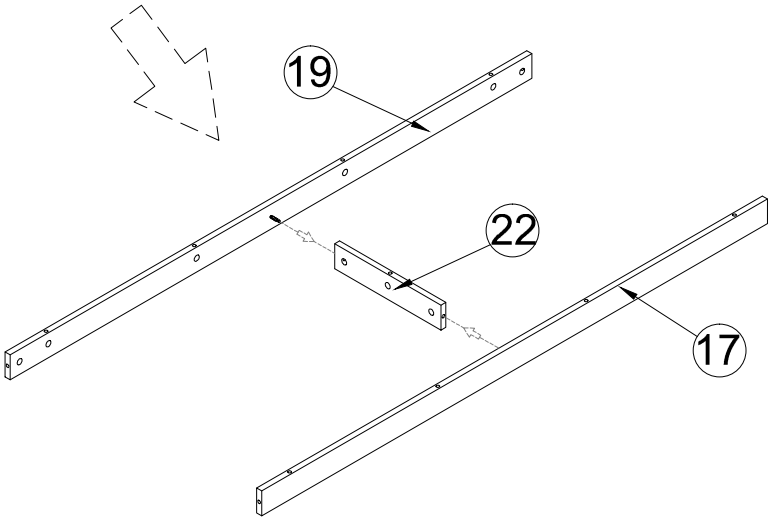

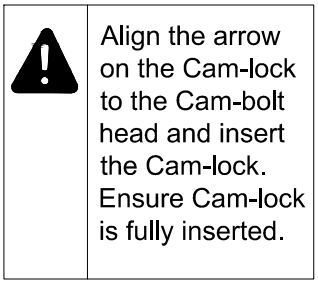

Align the arrow on the Cam-lock to the Cam-bolt head and insert the Cam-lock. Ensure Cam-lock is fully inserted.

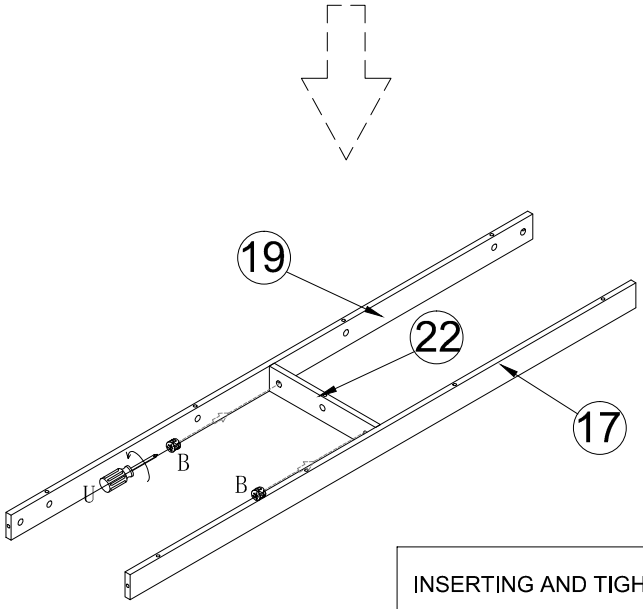

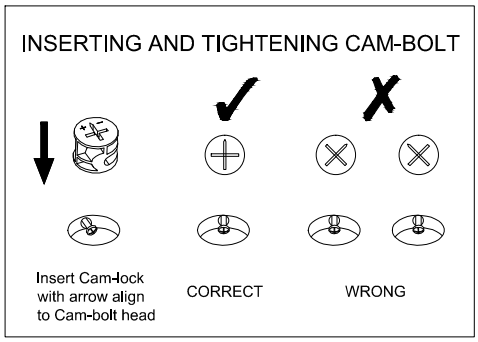

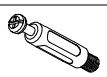	A×2PCS
	B×2PCS

STEP 13

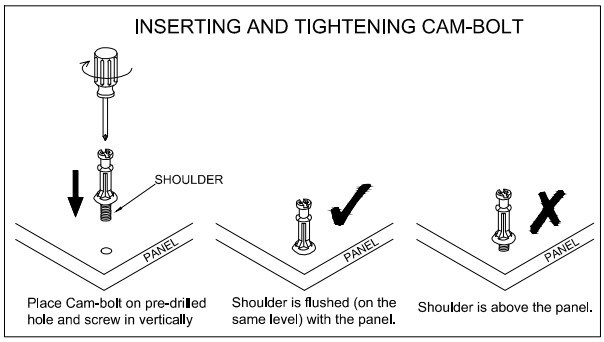

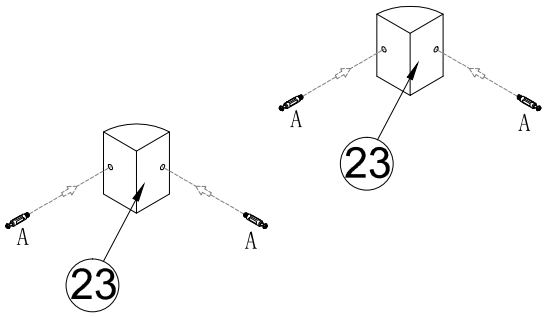

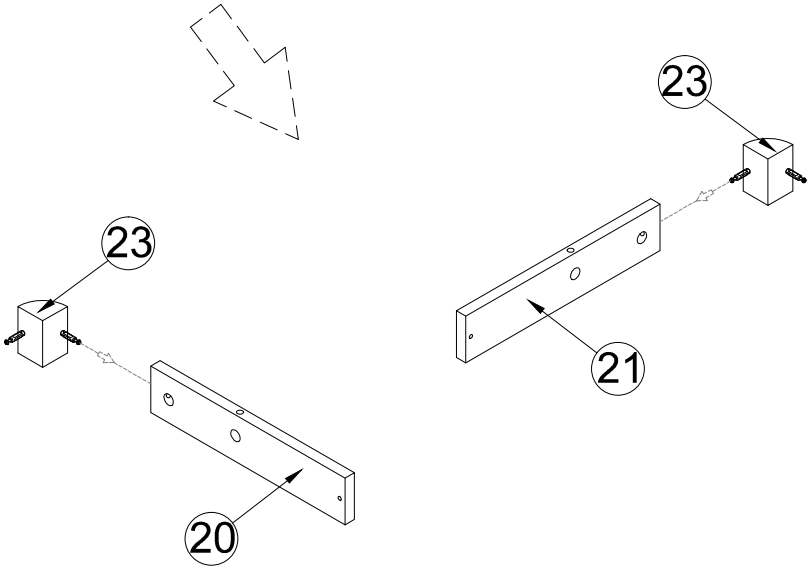

Align the arrow on the Cam-lock to the Cam-bolt head and insert the Cam-lock. Ensure Cam-lock is fully inserted.

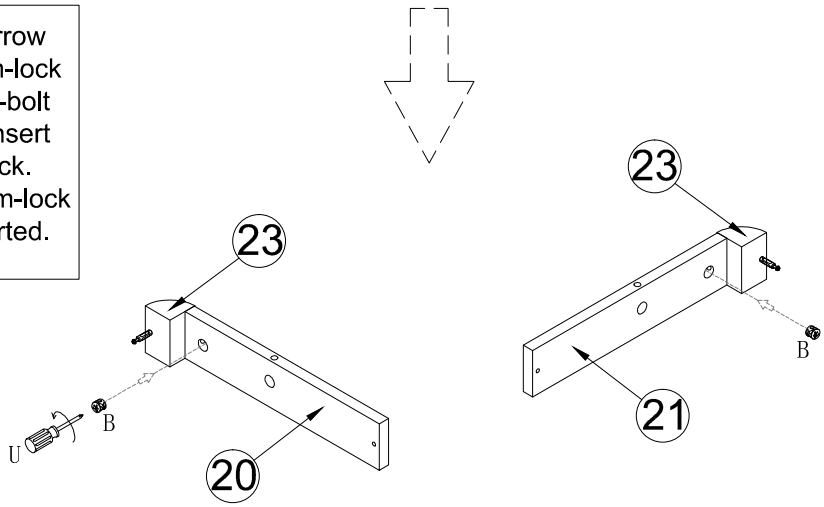

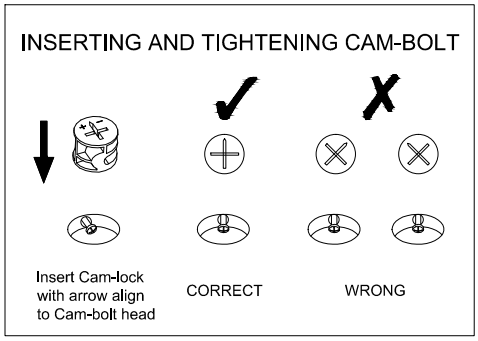

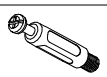	A×4PCS
	B×2PCS

STEP 14

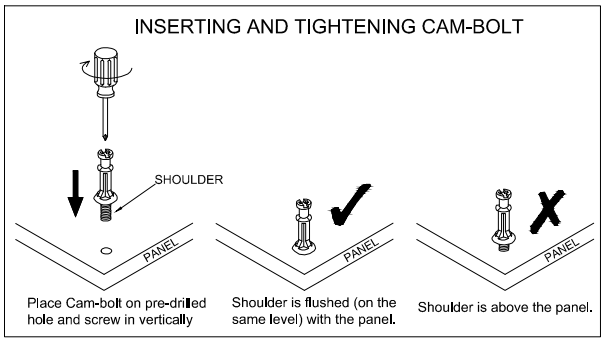

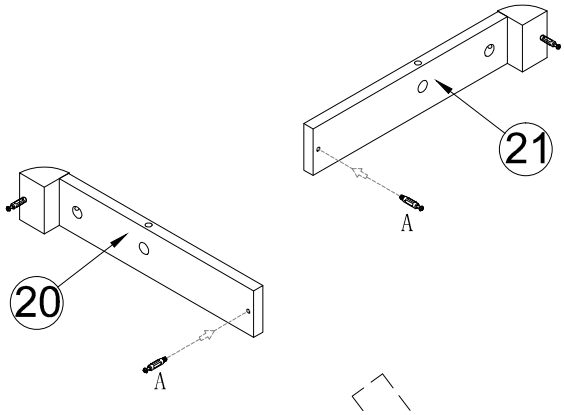

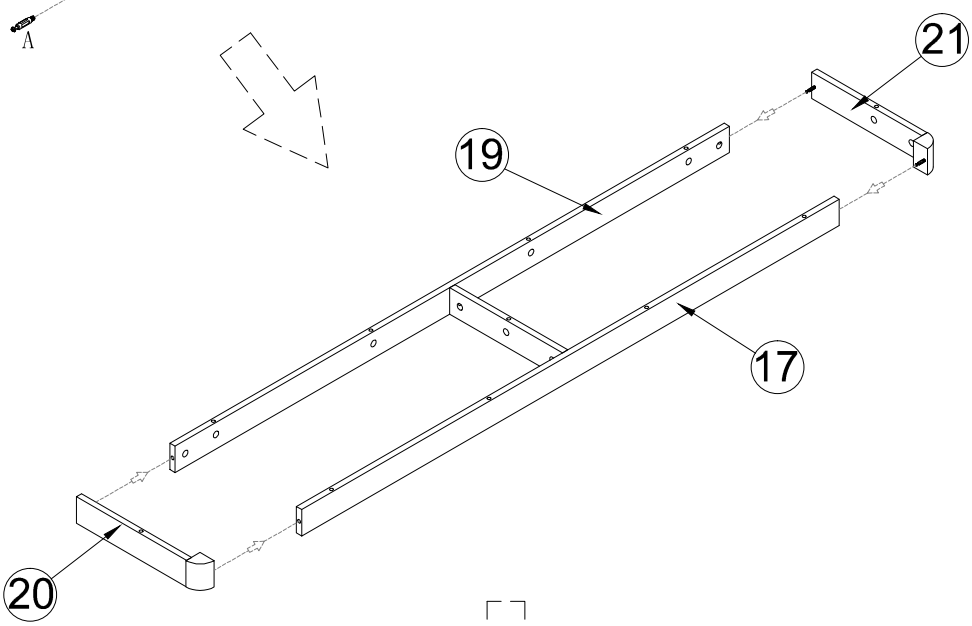

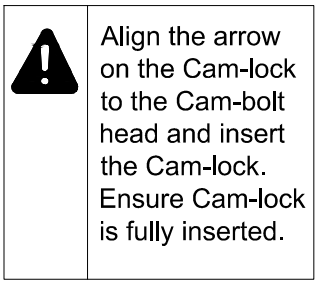

Align the arrow on the Cam-lock to the Cam-bolt head and insert the Cam-lock. Ensure Cam-lock is fully inserted.

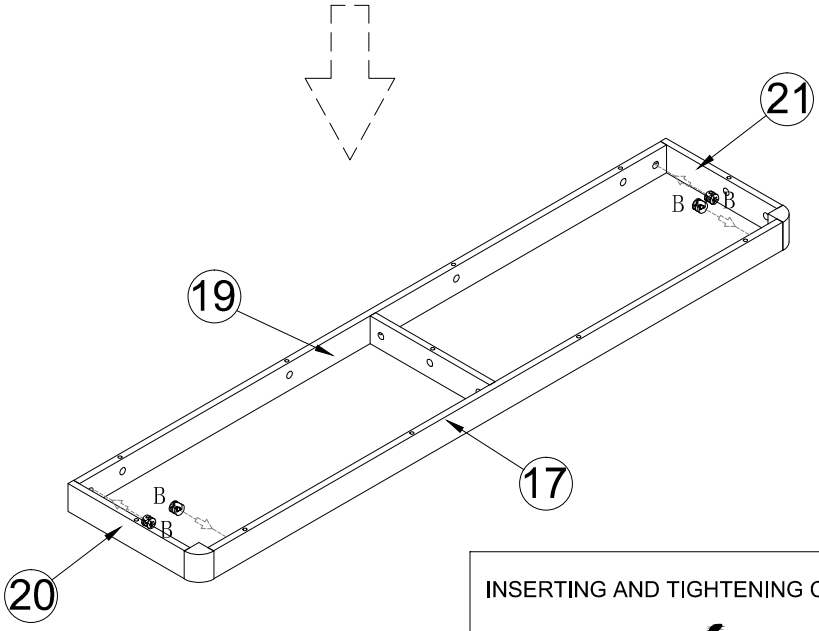

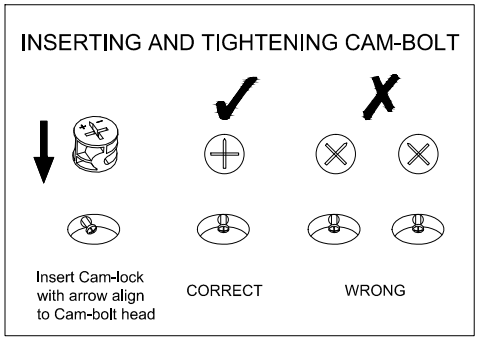

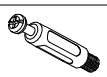	A×2PCS
	B×4PCS

STEP 15

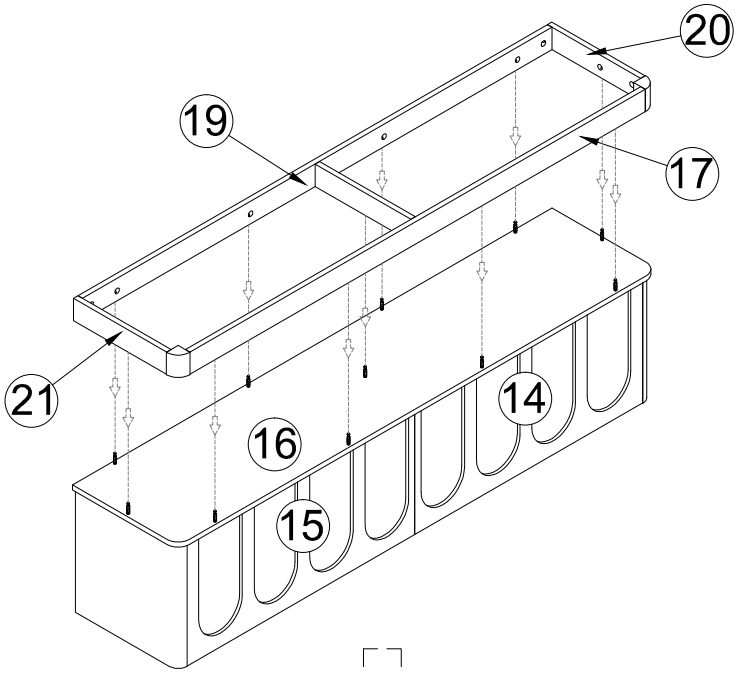

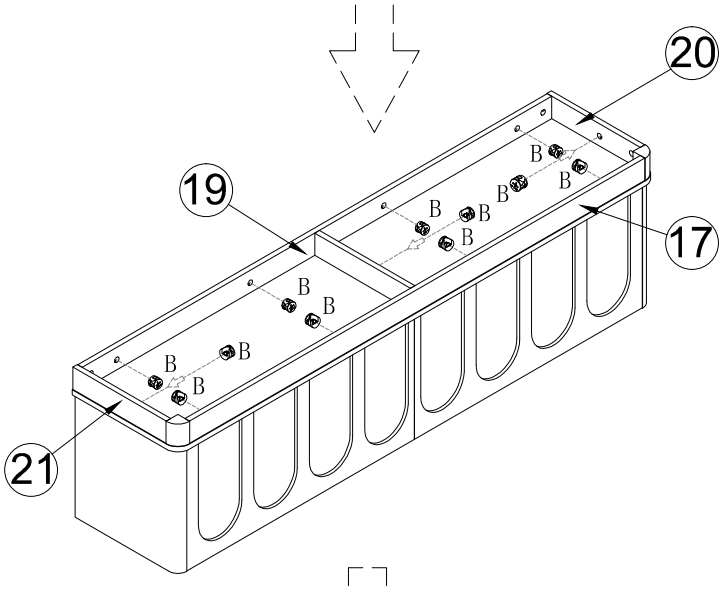

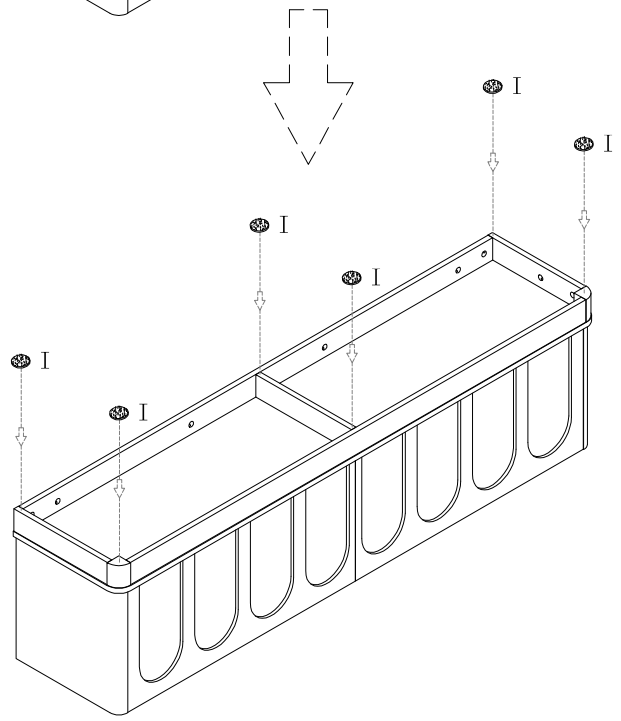

	B×11PCS
	I×6PCS

STEP 16

Note: When you get to this step, you will need to flip the cabinet over.

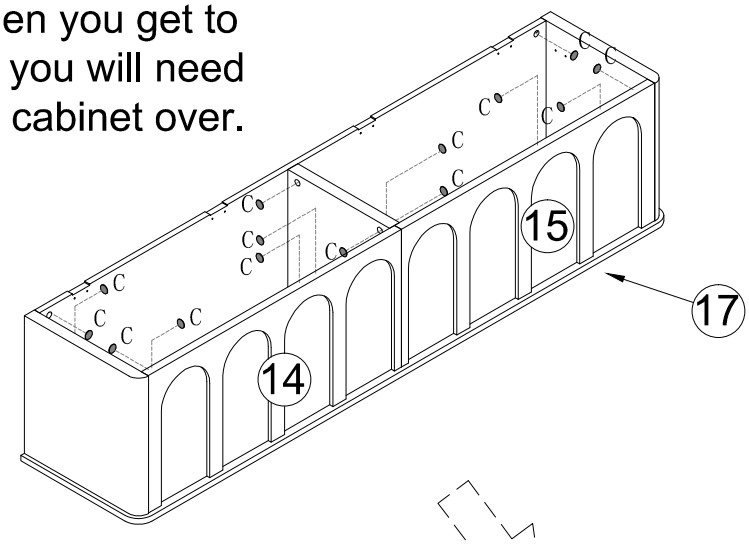

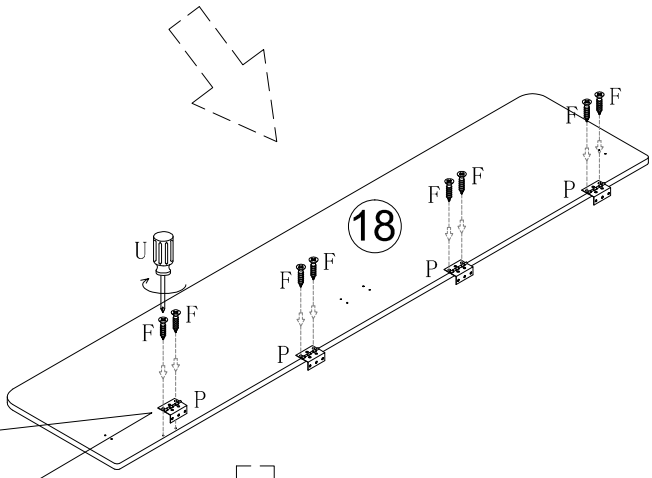

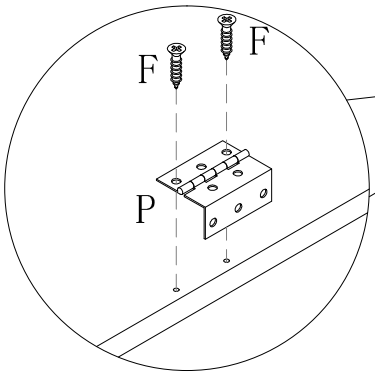

Install this part on the short side of the hinge.

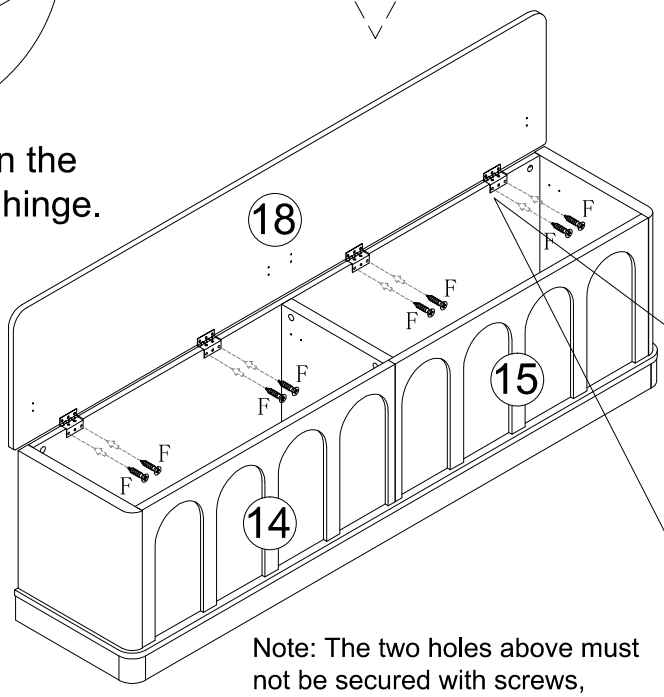

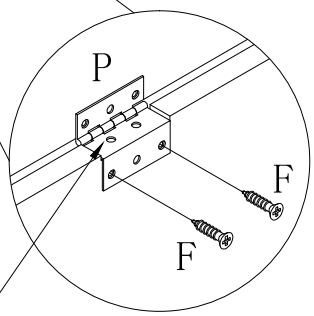

Note: The two holes above must not be secured with screws, otherwise it will cause the panel to be unable to close.

	C×14PCS
	F×16PCS
	P×4PCS

STEP 17

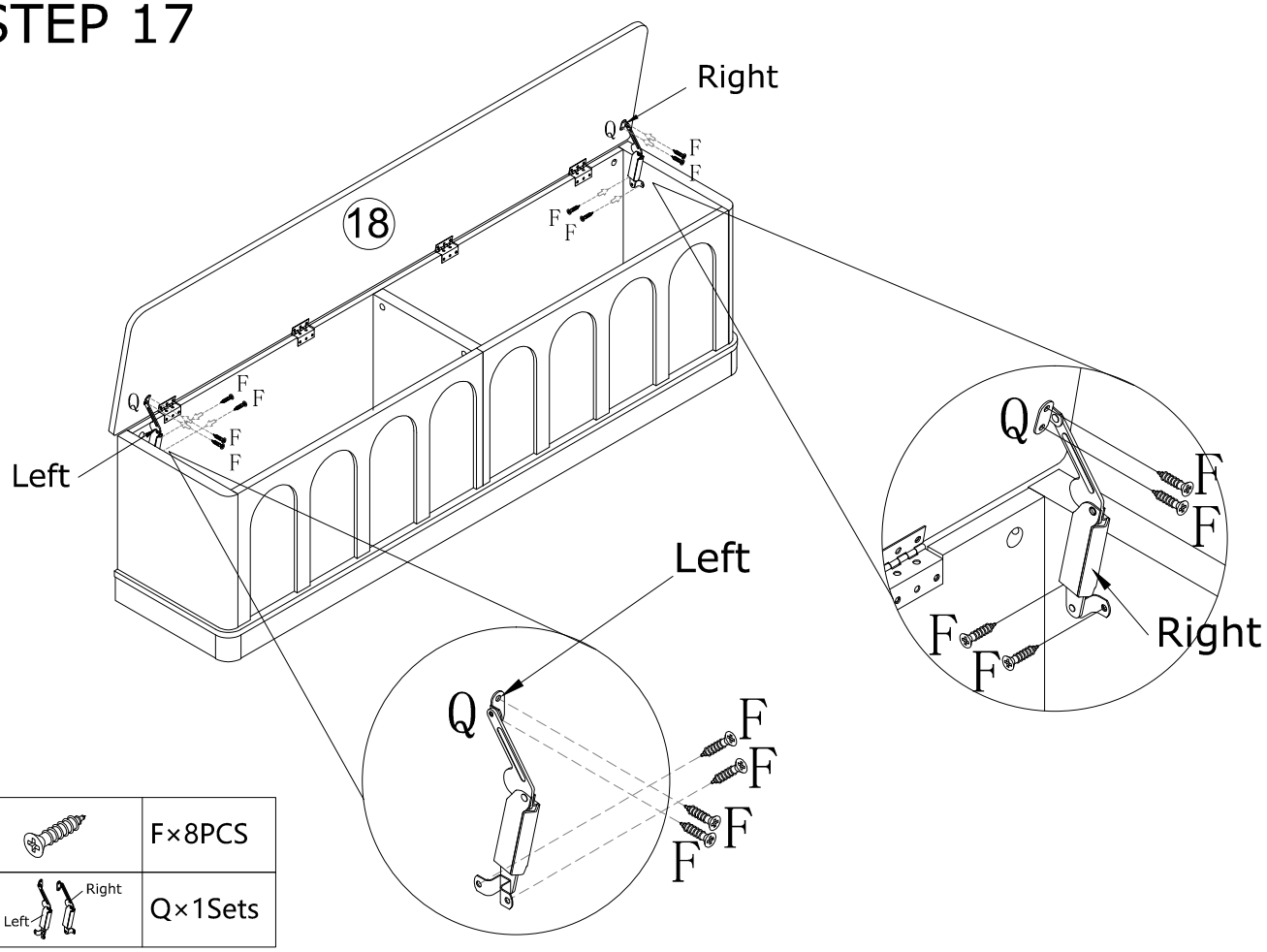

	F×8PCS
Right Left	Q×1Sets

STEP 18

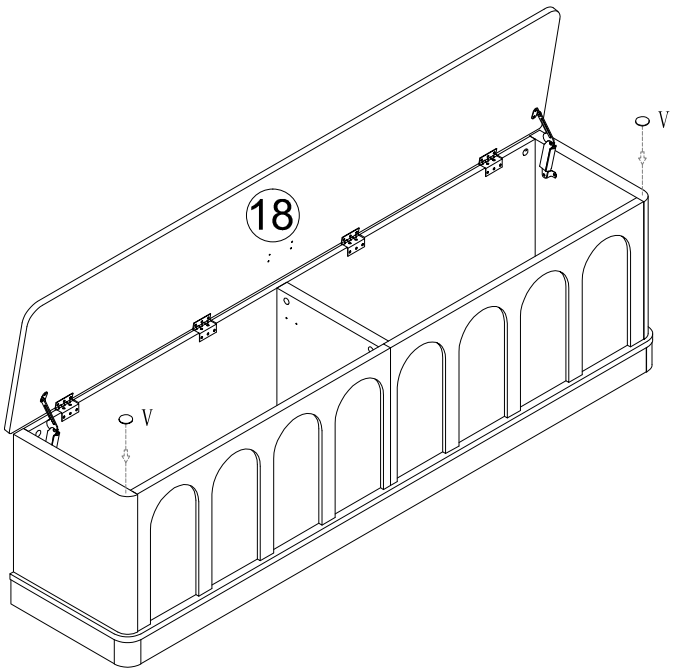

	V×2PCS

STEP 19

⚠	Reminder: The bed frame is heavy. From this step on, please place the accessories in the area where the bed will eventually be placed, and then proceed with subsequent assembly operations.

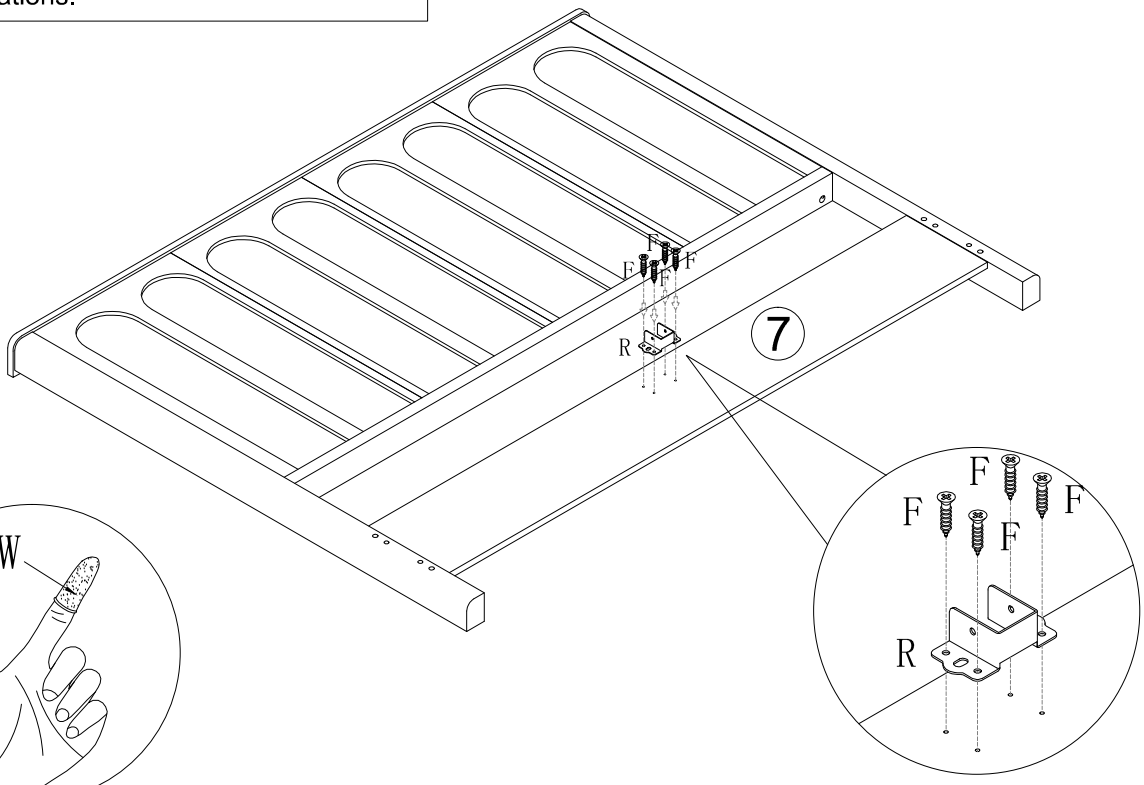

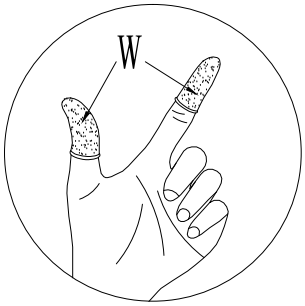

When installing the screw L, please wear finger cots for better grip and finger protection.

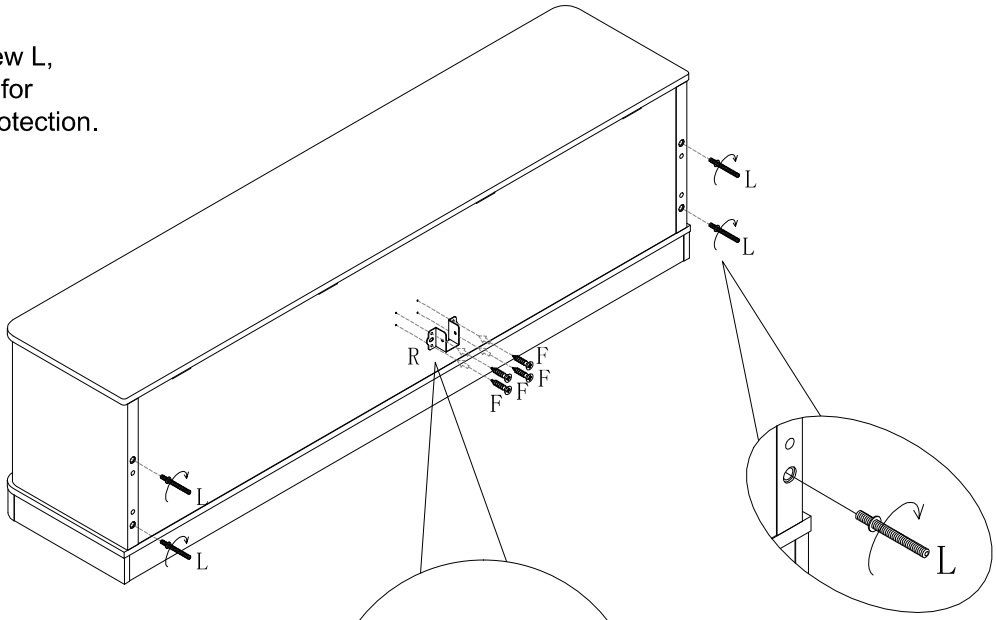

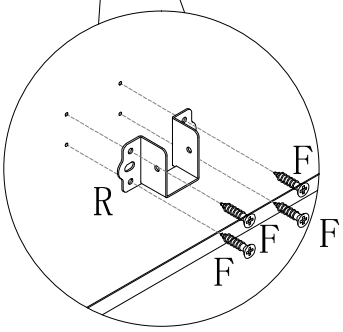

Note: Screw the shorter end of the screw into the board.

	F×8PCS
	L×4PCS
	R×2PCS
	W×4PCS

STEP 20

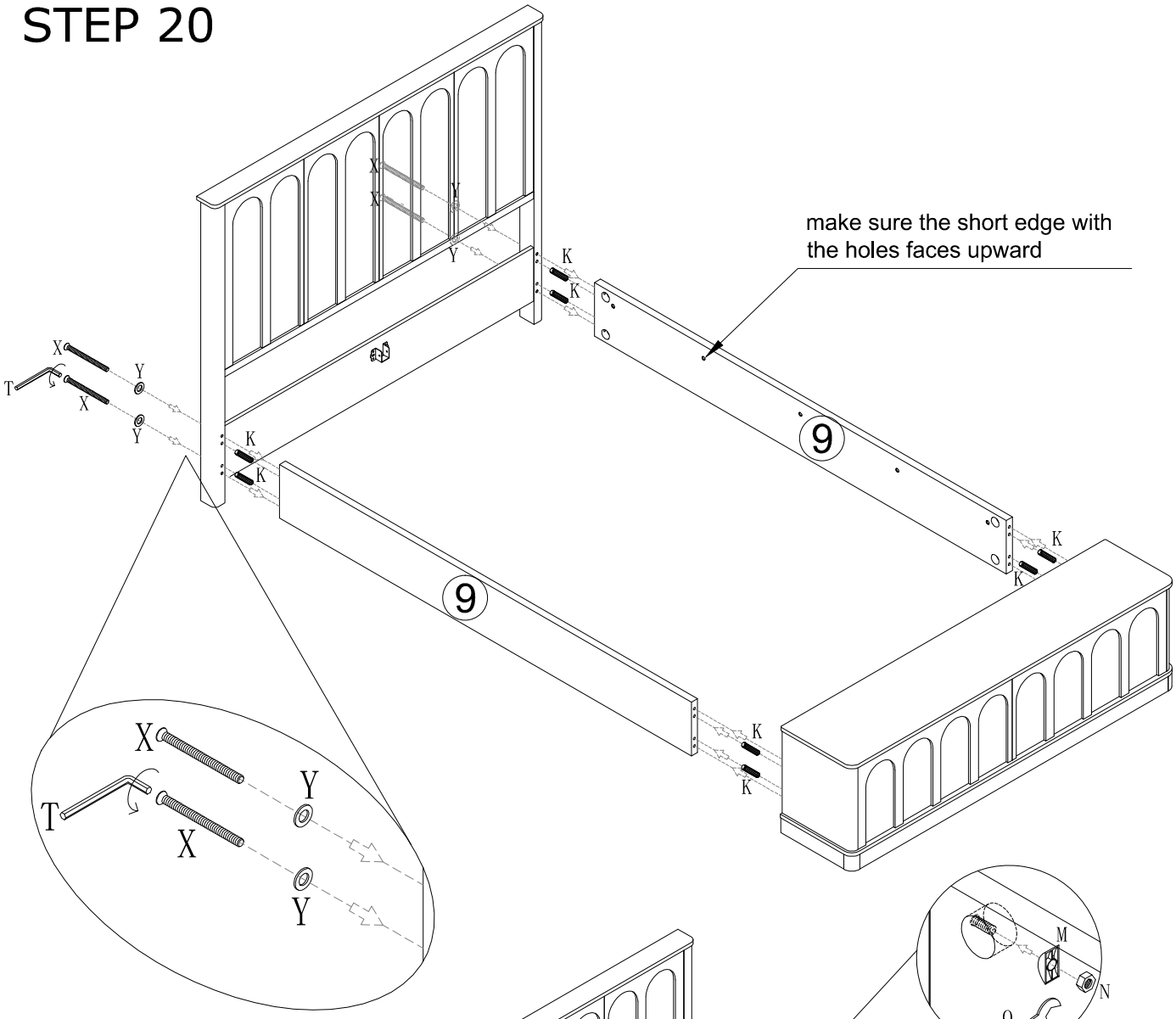

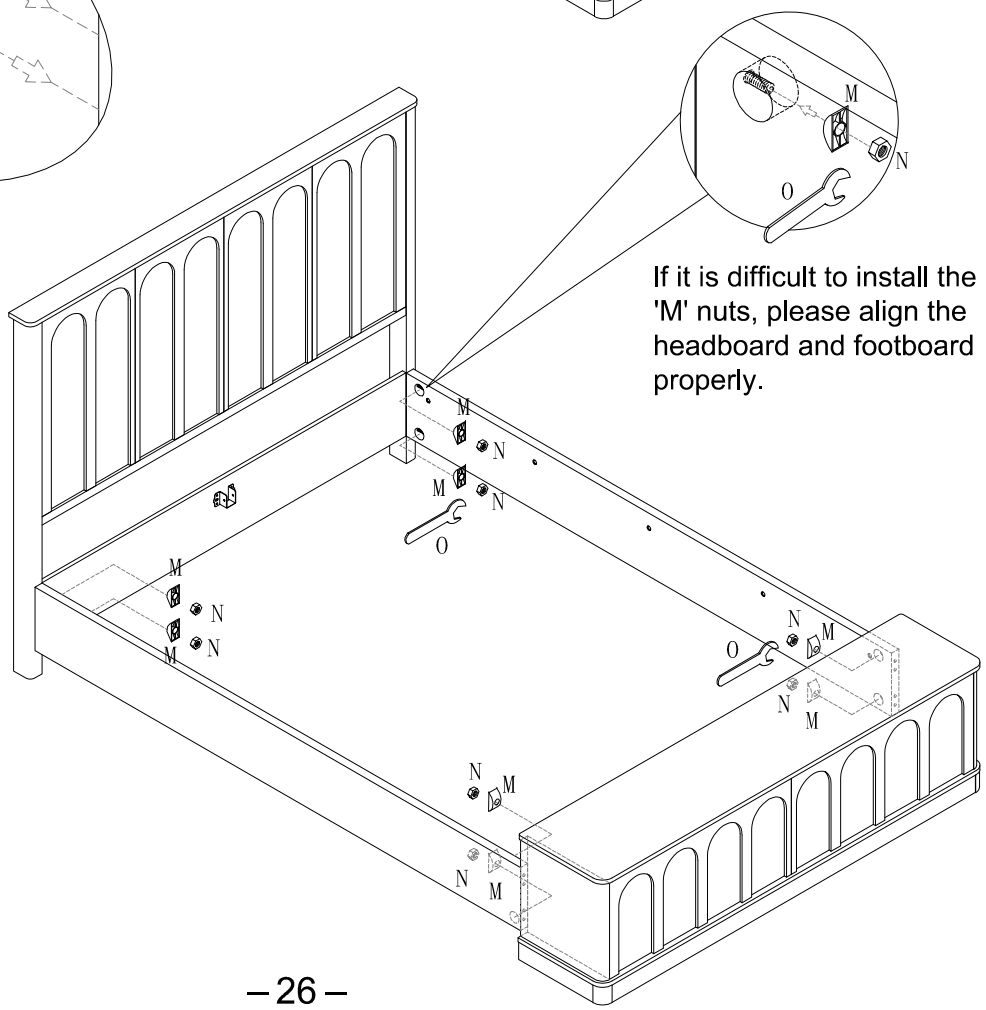

If it is difficult to install the 'M' nuts, please align the headboard and footboard properly.

	K×8PCS
	M×8PCS
	N×8PCS
	O×1PC
	T×1PC
	X×4PCS
	Y×4PCS

STEP 21

When installing, please pay attention to the installation direction of wooden part number 24. The countersunk hole (large hole) should face outward.

	S×10PCS
	T×1PC

STEP 22

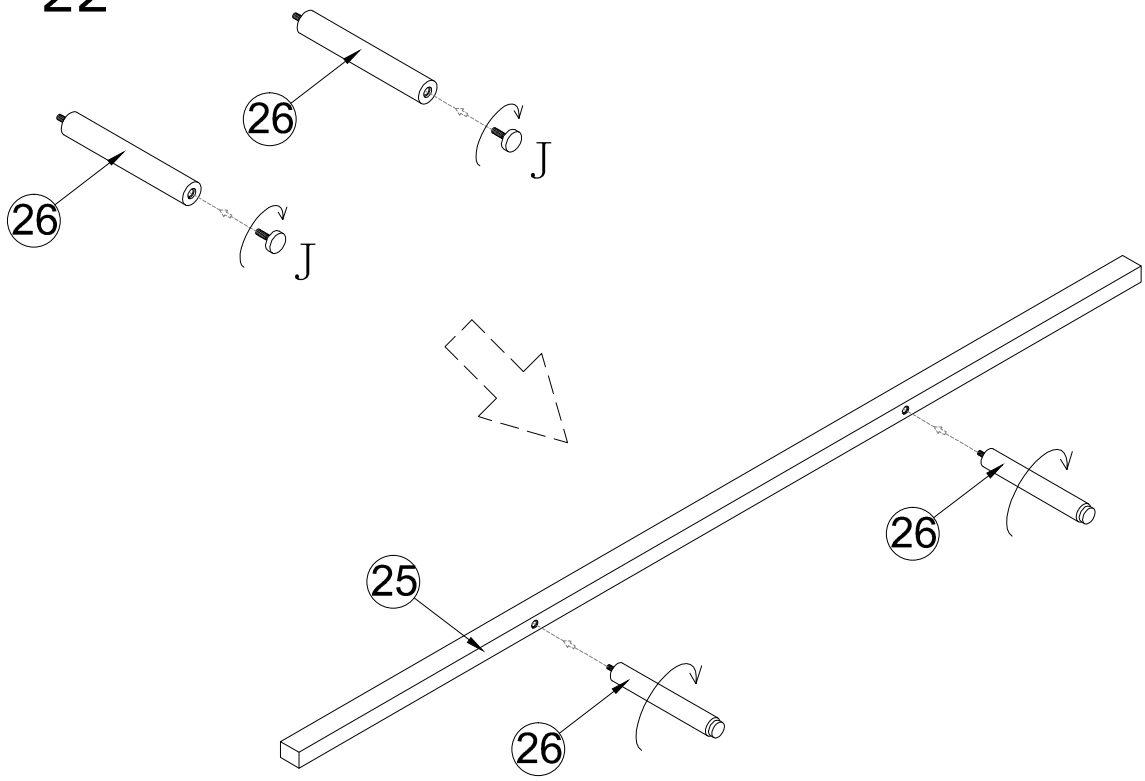

	J×2PCS

STEP 23

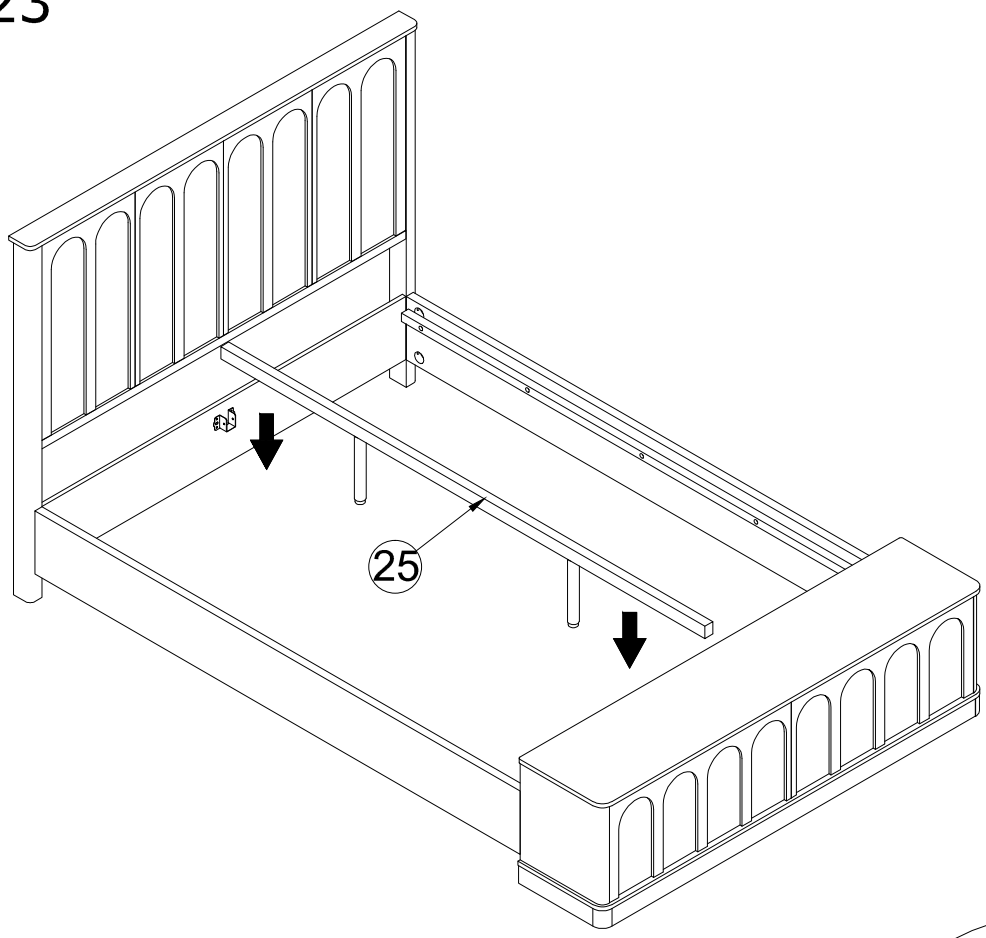

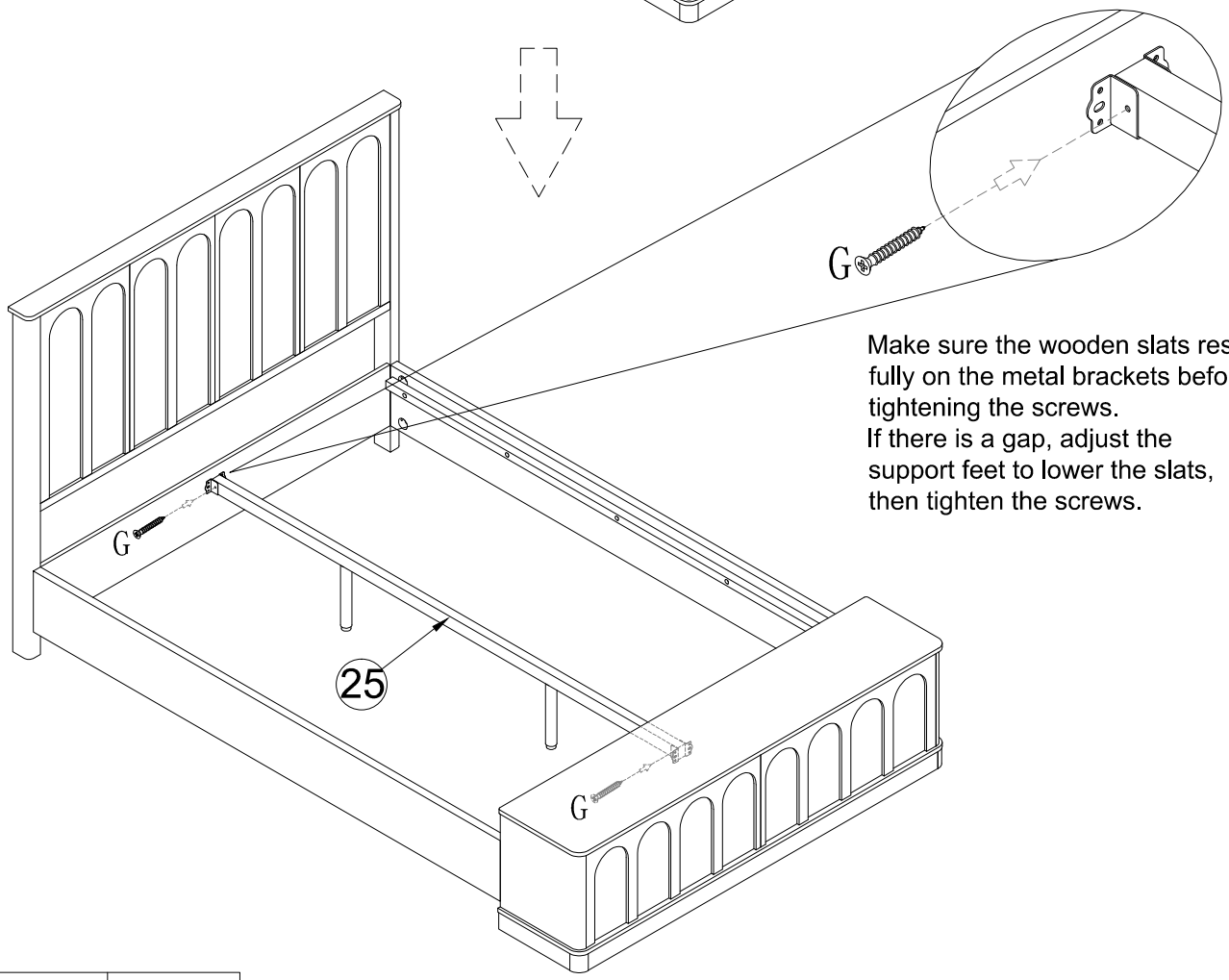

Make sure the wooden slats rest fully on the metal brackets before tightening the screws.
If there is a gap, adjust the support feet to lower the slats, then tighten the screws.

	G×2PCS

STEP 24

First, make sure the bed frame is properly positioned and that the side frames are perpendicular to the headboard and footboard before installing the slats.

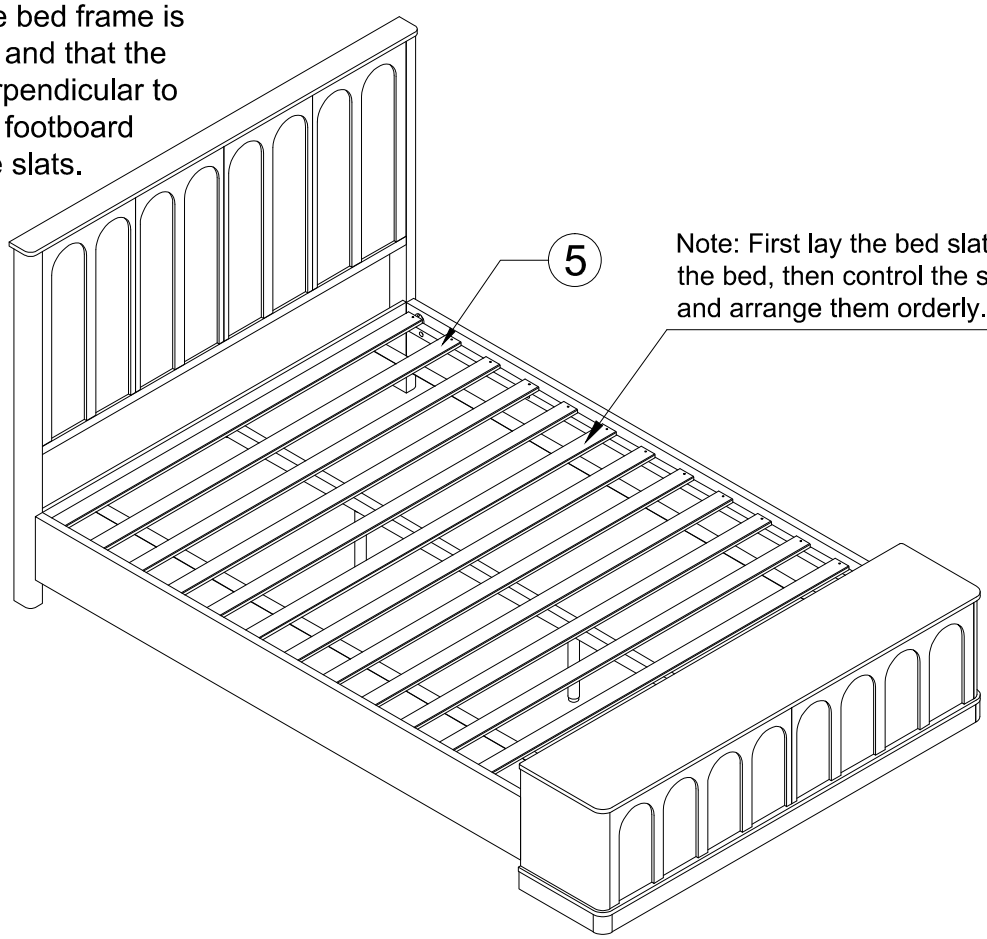

Note: First lay the bed slats flat on the bed, then control the spacing and arrange them orderly.

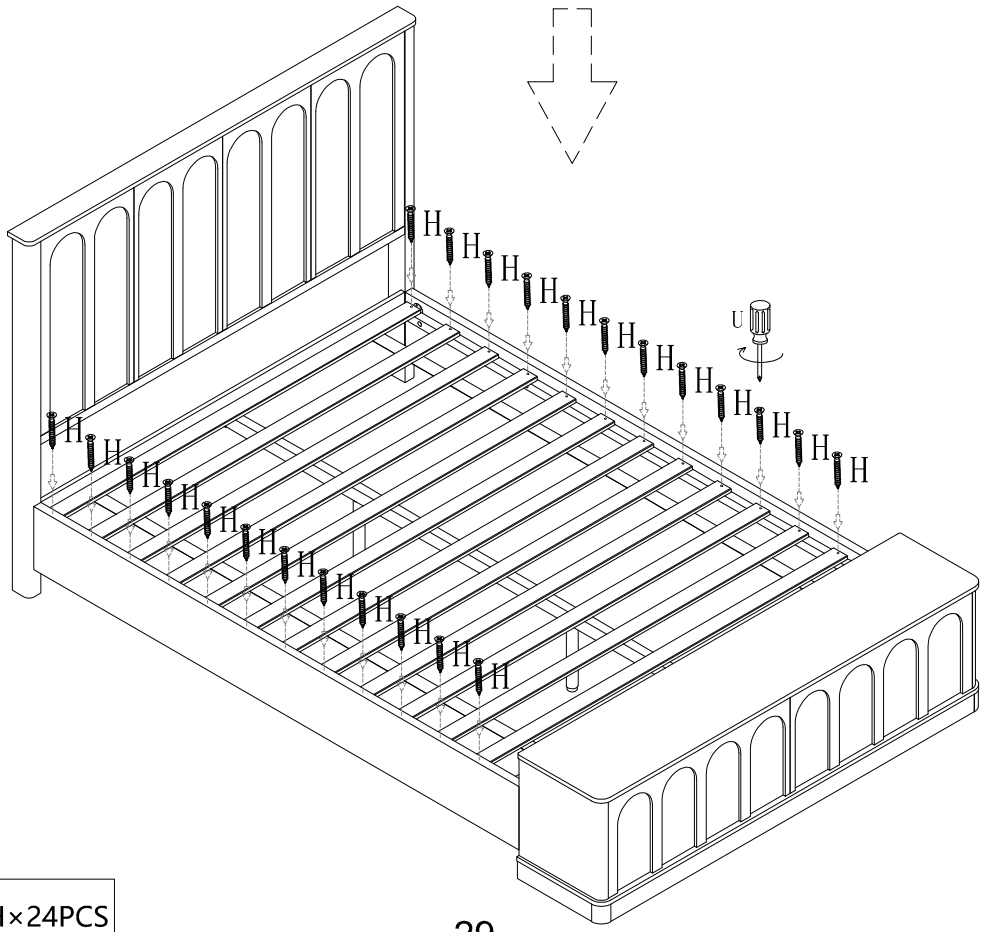

	H×24PCS

STEP 25

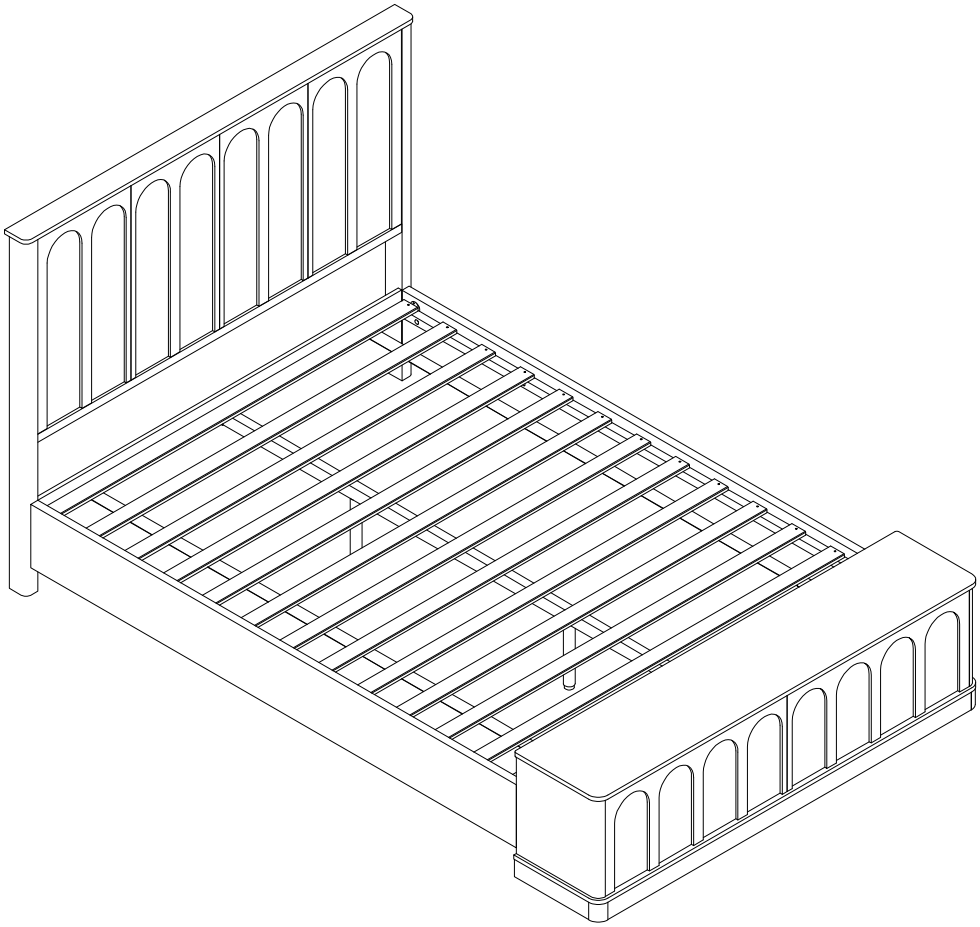

Assembly complete