Assembly Instructions

Caution: You must read these Assembly Instructions before you proceed

Care & Maintenance

- Not for commercial use. For residential use only.
- Prolonged exposure to rain may cause rusting which can stain floors.
- Do not put hot items directly on furniture surface.
- Do not clean furniture with harsh cleansers or polish
- To obtain the longest lifespan of your outdoor products, minimizing exposure to direct sunlight is recommended.
- Children should not climb or jump on the furniture.
- Do not write on furniture without a padded barrier to protect the surface.
- To obtain the longest lifespan of your outdoor products, avoid extended andlengthy exposure to rain, snow, and direct sunshine. Whenever possible coverthe product and /or place under patio or awnings.
- Stains may be removed with mild soap solution and damp cloth.
- Keep away from sources of ignition.
- Dust and pick-up spills using a clean, non-colored, lint-free cloth.

Please look into the table panel for hardware packs

Table

Caution: This Table is NOT a TOY
Keep your child/children at bay during the assembly process.
Whenever lifting or moving the Table and to prevent damage to the Table, two adults may be needed to execute these actions.

Part List

Label	Picture	Description	Qty
A	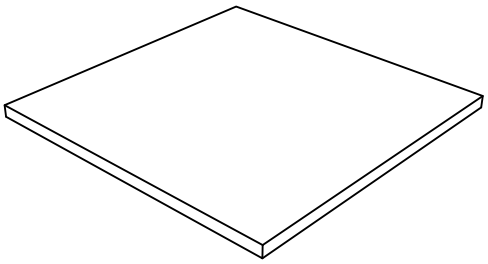	Table Top	1
B	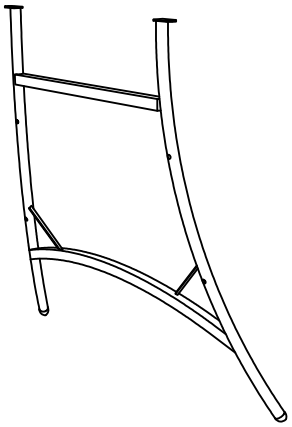	Leg Table	2
C	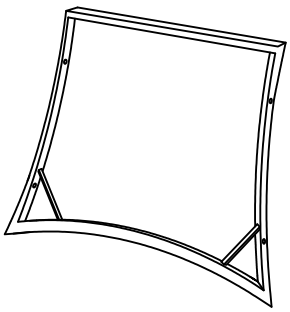	Support Panel	2

Hardware

No.	Picture	Description	Qty
1	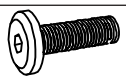	Bolt (M6x20)	5
2		Bolt (M6x35)	9
3		Washer M6	13
4		Allen Wrench	1

Assembly Preparation

Before Beginning Assembly:

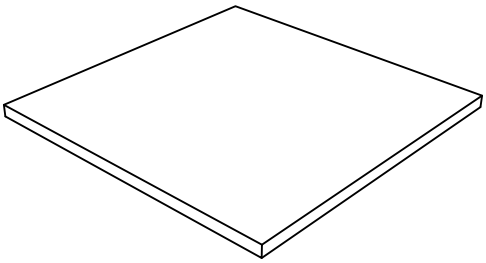

A x1

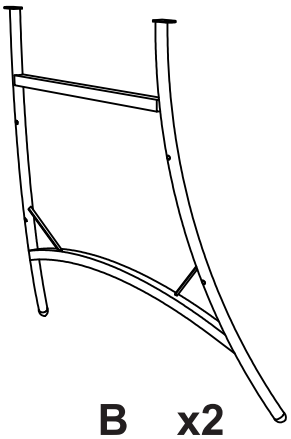

B x2

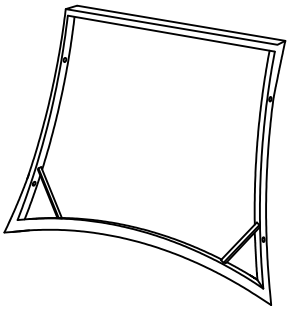

C x2

1 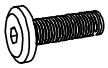 **x5**

2 **x9**

3 **x13**

4 **x1**

- Read instructions, cover to cover-

- Have 2 adults on hand for assembly-

- Do not assemble on flooring or carpet-

- Assemble on a clean non-marring surface (packing foam)-

- Save all packaging until finished-

Assembly Steps

Overview

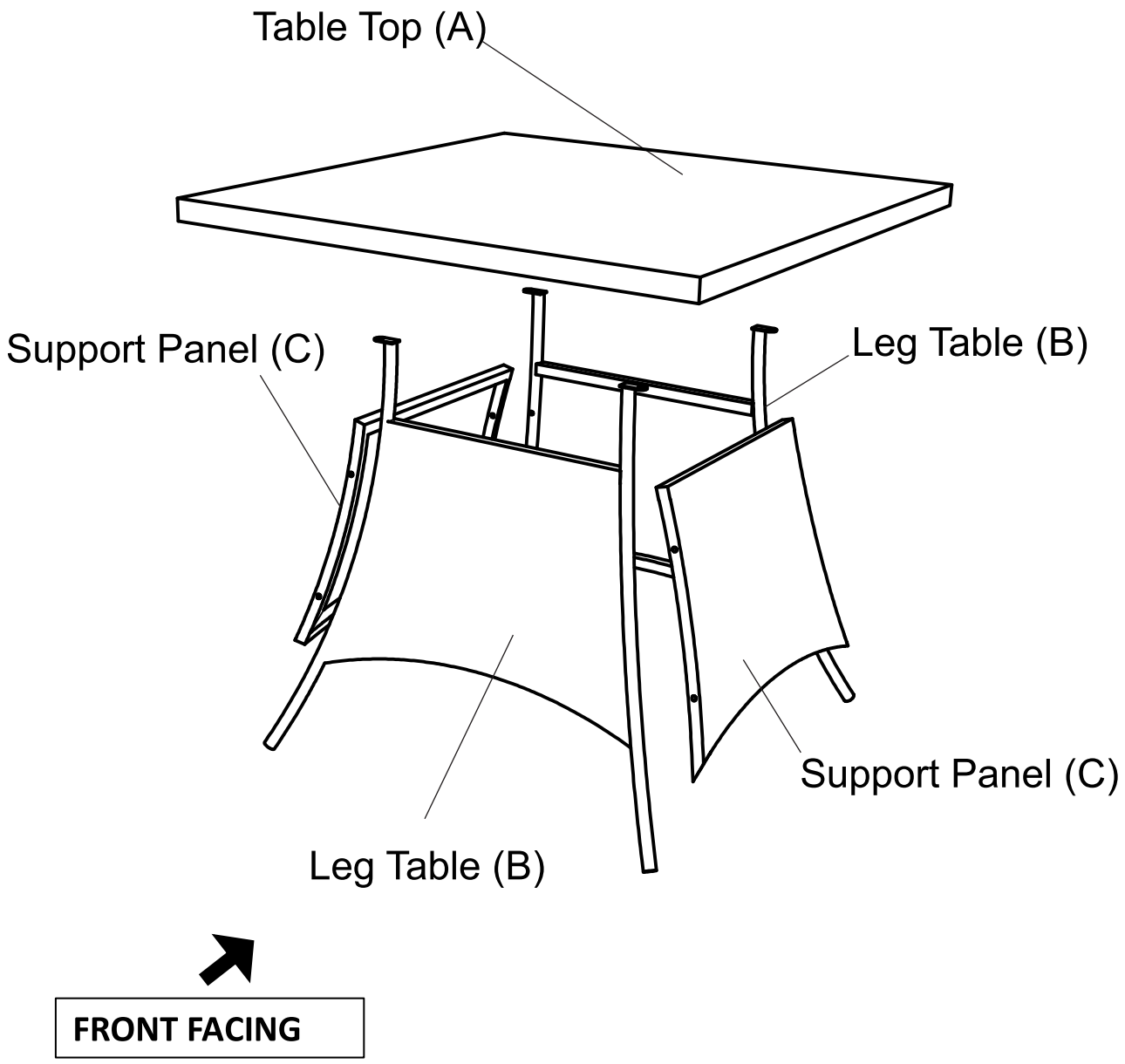

This Table has multiple parts and may require up to 30 minutes to assemble. To give you an overview of the Table parts, the above picture is to help you put the various parts into perspective.Please read through the instructions below to familiarise yourself with the parts and steps before assembly.

Step 1

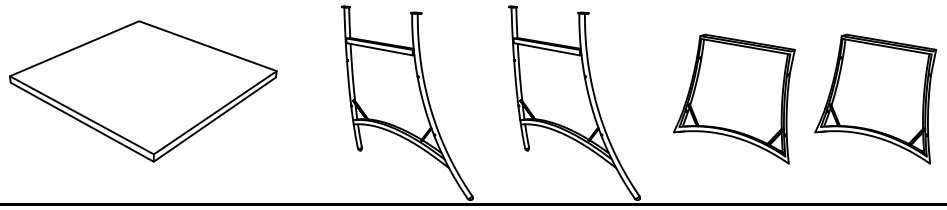

Unpack and place all parts on a clean, non-marring surface.

Step 2

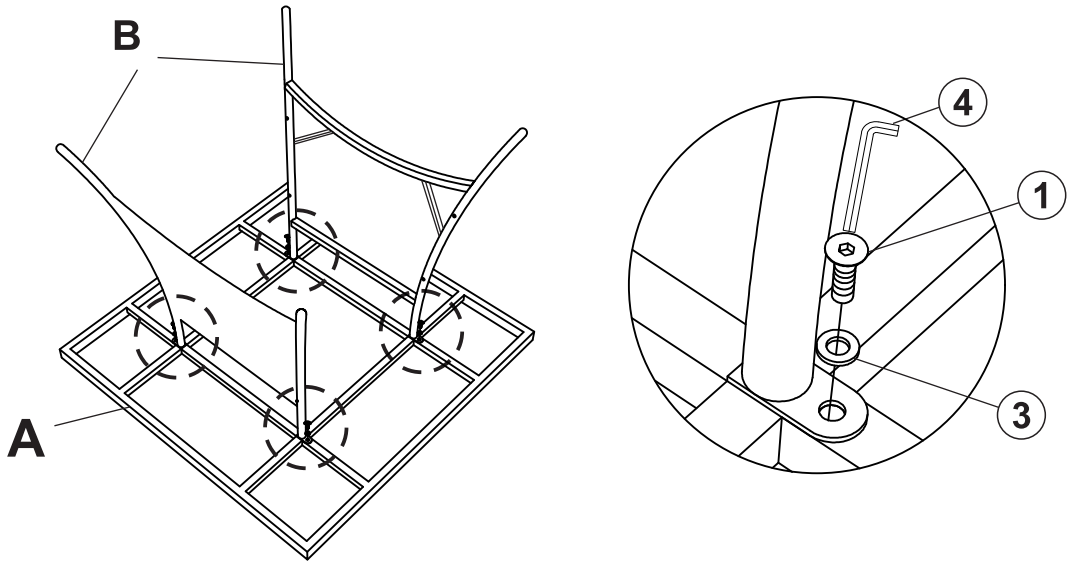

2. Connect Leg Table (B) to the Table Top (A) using Botl (1) and Washer (3) with Allen Wrench (4).

Do not fully tighten the Bolts.

Step 3

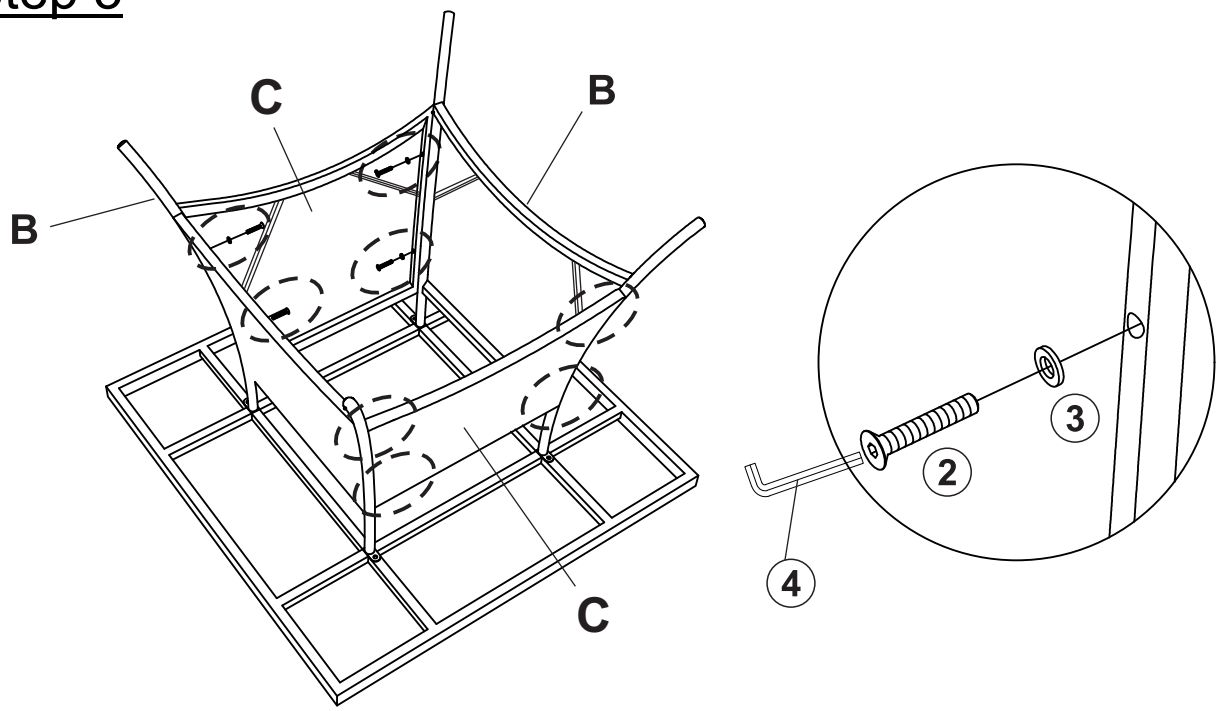

3. Connect Support Panet (C) to the Leg Table (B) using Botl (2) and Washer (3) with Allen Wrench (4).

Do not fully tighten the Bolts.

Step 4

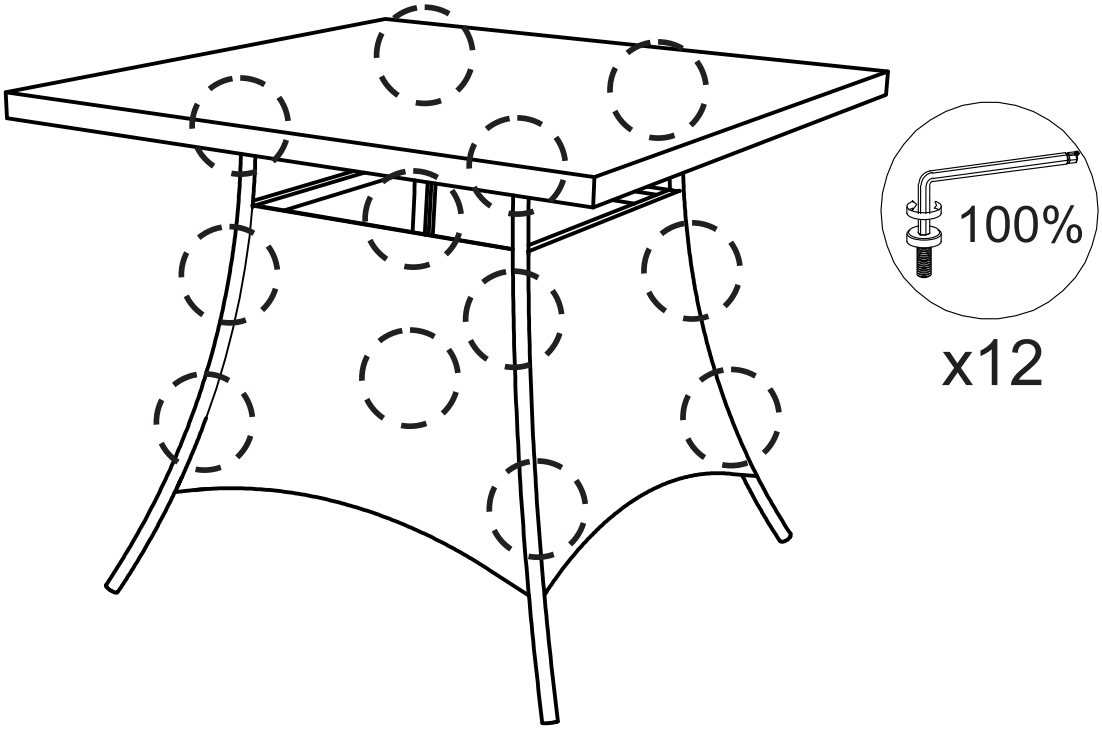

4.TIGHTEN ALL BOLTS 100%

Step 5

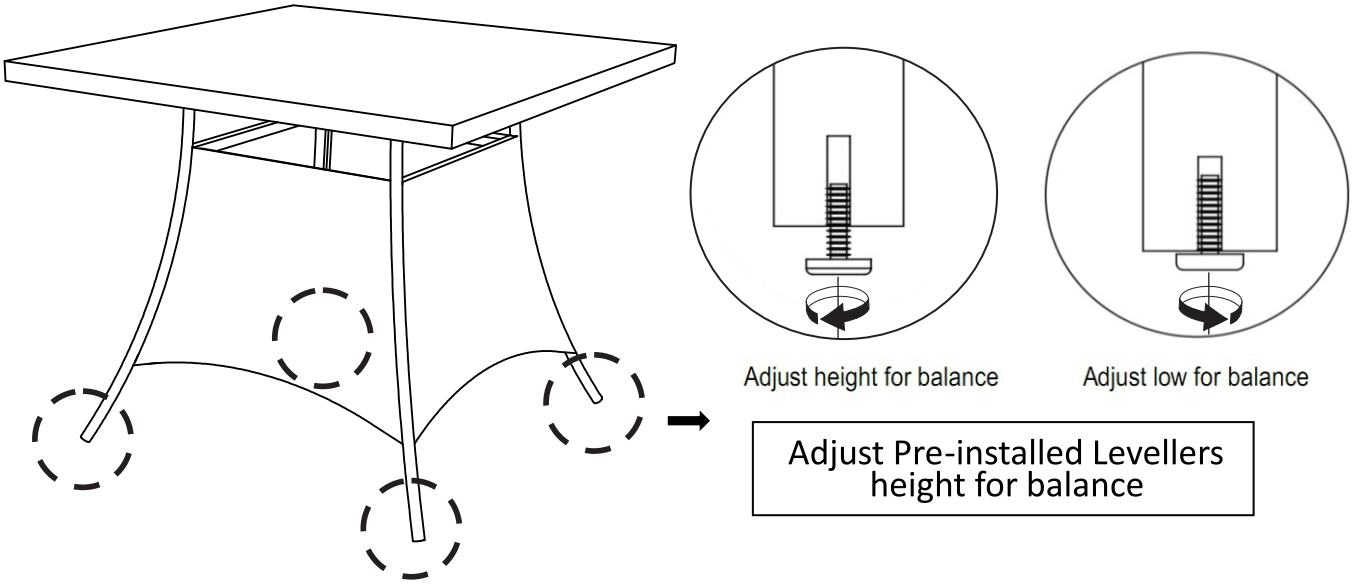

inspect the table and make sure all parts are adequately connected.
Then EXERT pressure, floorwards onto the table with both hand
This pressure will help align all parts at all joint.
In a sequential manner, tighten all bolts at all joint.
Adjust the Levellers untill the table is level with the ground.
To adjust the Levellers,get assistance from an adult partner to lift/lean and hold the table while you are working