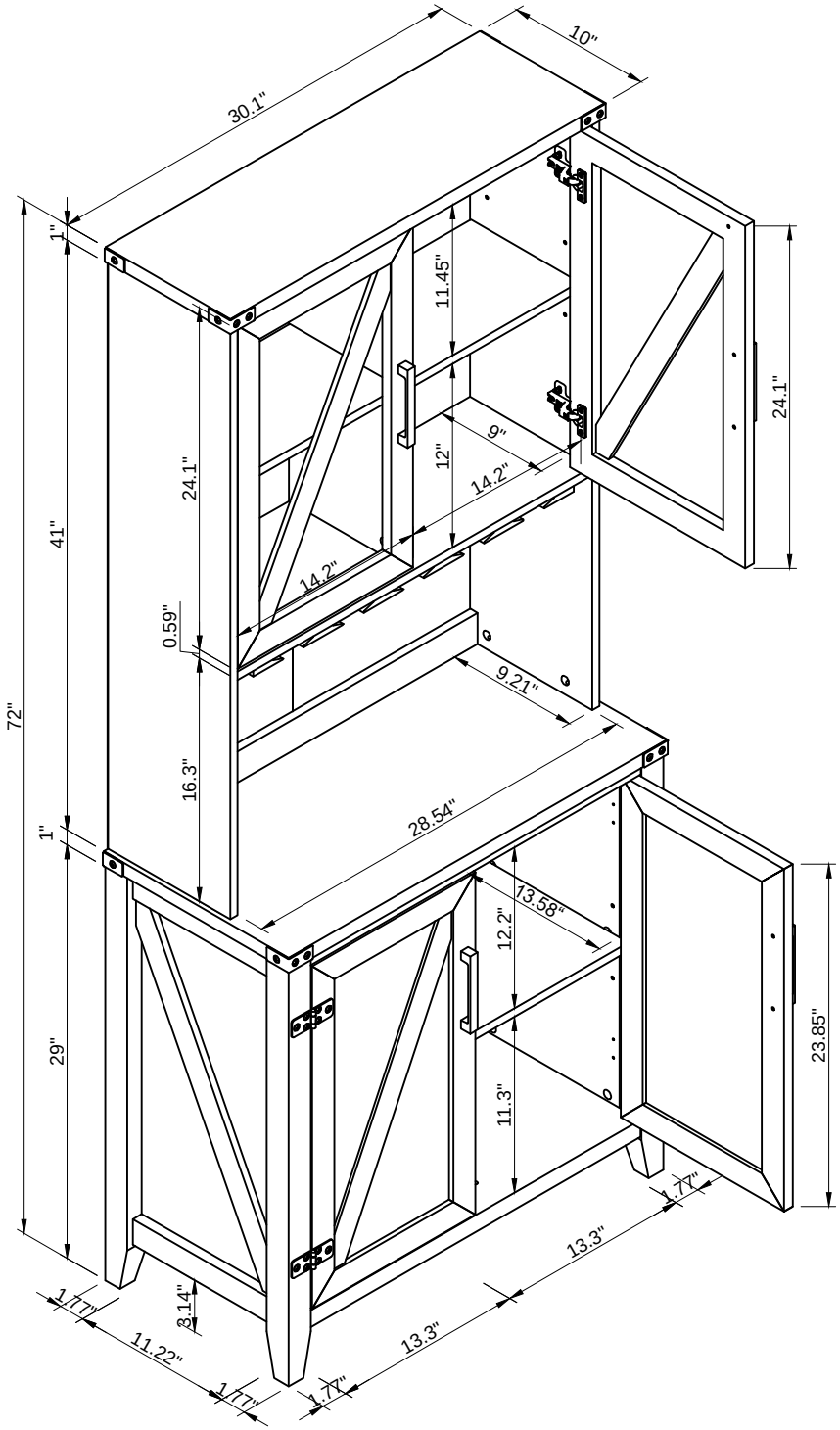
30.1"
10"
1"
72"
41"
24.1"
11.45"
12"
9"
14.2"
14.2"
0.59"
16.3"
9.21"
28.54"
1"
29"
13.58"
12.2"
11.3"
24.1"
23.85"
1.77"
13.3"
13.3"
1.77"
1.77"
3.14"
11.22"
1.77"