ASSEMBLY INSTRUCTIONS

PATIO DAYBED

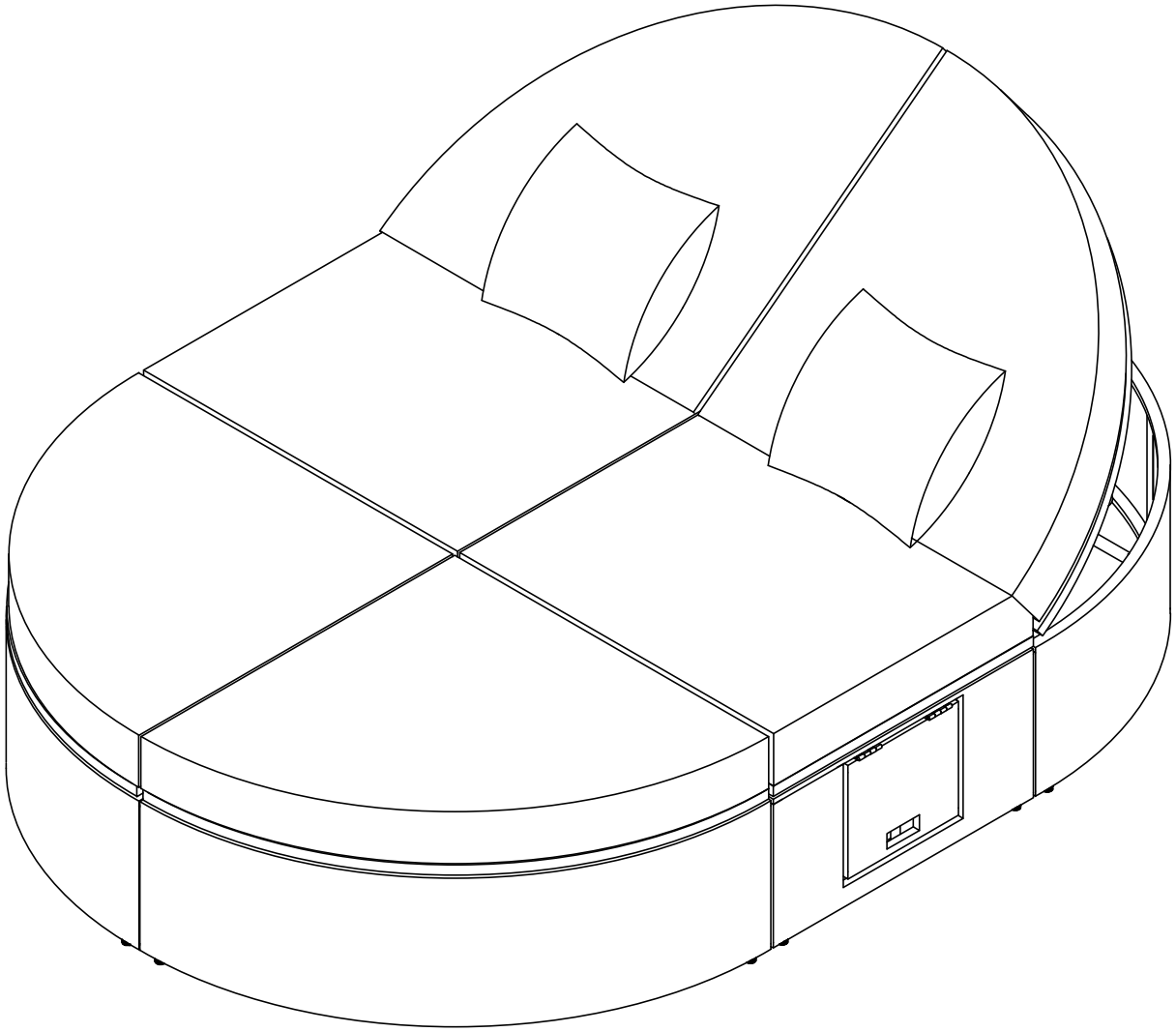

NOTE: 50% TIGHTEN BEFORE FIXING ALL BOLTS

(1 x Sun Lounger)

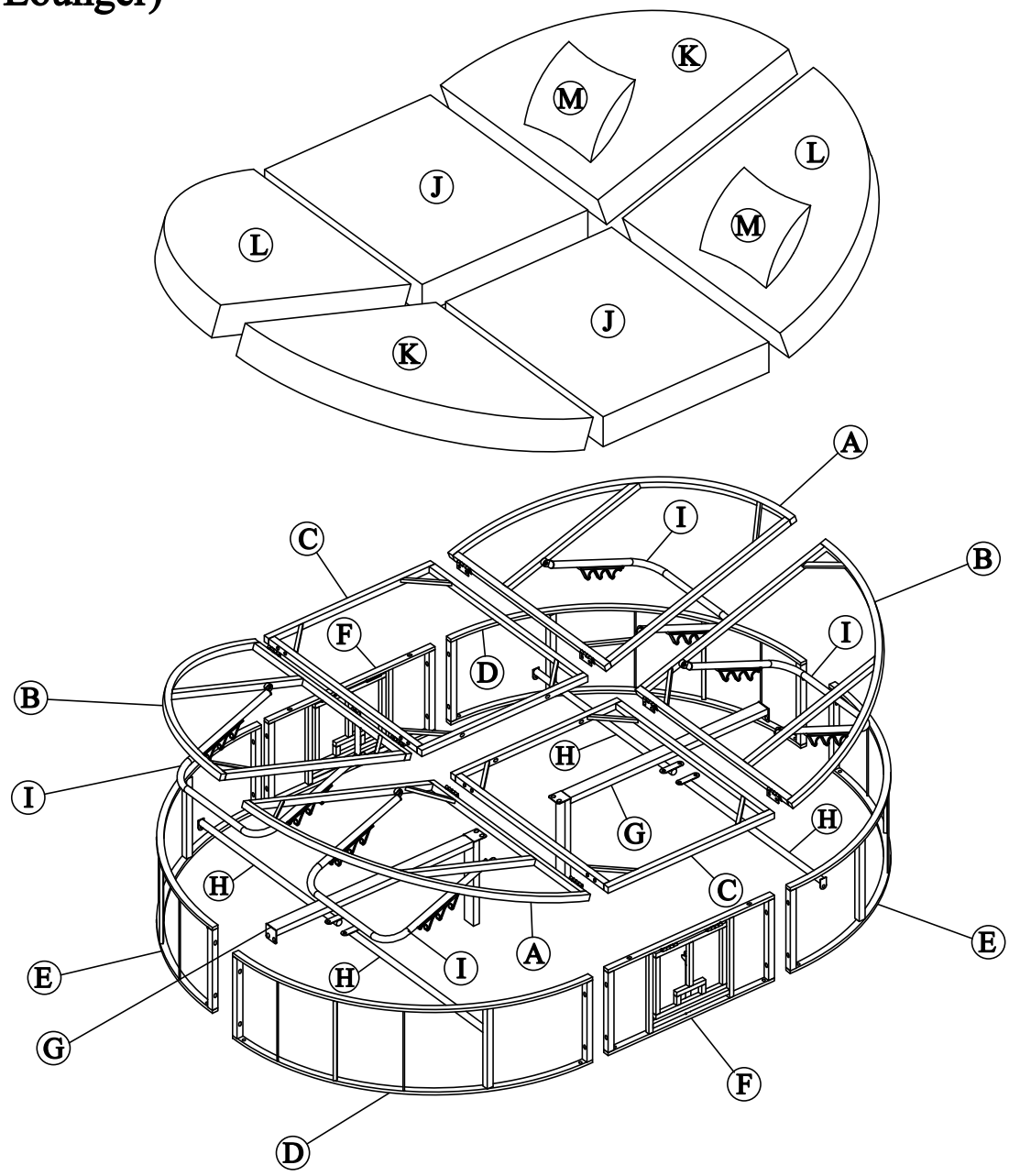

Notice:

1. 50% Tighten before fixing all screws, Allen wrench is recommended instead of an electric drill.
2. Place the item on a flat ground to adjust and make sure it remains stable
3. Tighten up all screws with tools gradually.
4. If the screws are not aligned with holes during assembly, please loosen all the other screws to 50% and continue the assembly process.
5. If the item is not stable, please loosen all the screws, adjust it on a flat ground and tighten up all screws again.
6. Note : If one or some screws are fully tightened during assembly, chances are the others will not be aligned with holes. In addition, all the holes are designed to be relatively larger to provide more space for the adjustment of the screws.

Part List

A 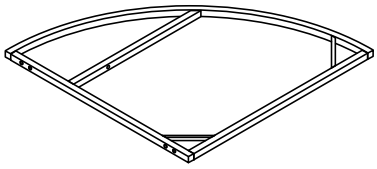 Back Right Frame (2 pcs)	B 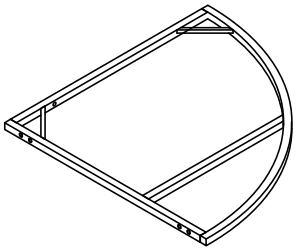 Back Left Frame (2 pcs)	C 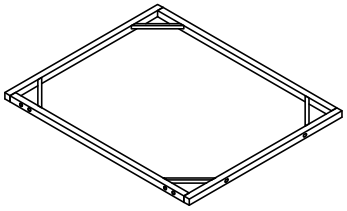 Seat Frame (2 pcs)
D 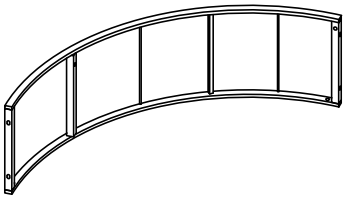 Side Right Frame (2 pcs)	E 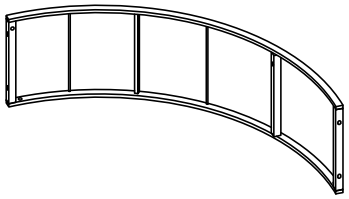 Side Left Frame (2 pcs)	F 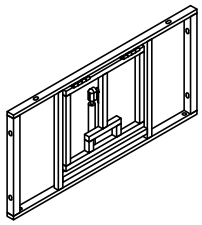 Side Frame (2 pcs)
G 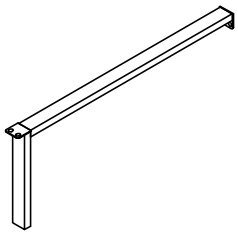 Leg Frame (2 pcs)	H 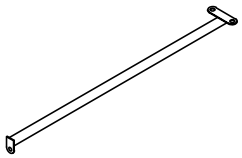 Stretcher (4 pcs)	I 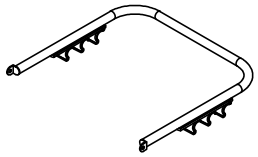 Hip Back Frame (4 pcs)
J 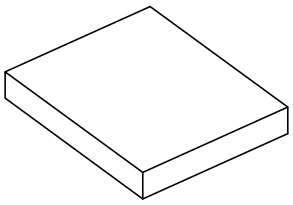 Middle Cushion (2 pcs)	K 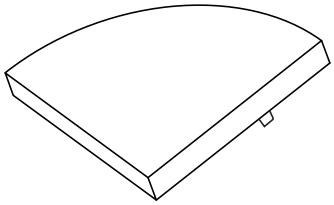 Right Cushion (2 pcs)	L 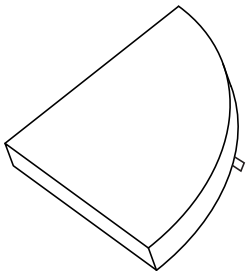 Left Cushion (2 pcs)
M 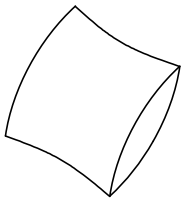 Pillow (2 pcs)		

Hardware List

1 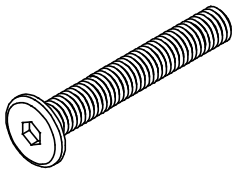 Bolt M6 x 60 mm 14 pcs + extra 2 pcs	2 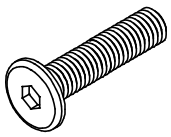 Bolt M6 x 30 mm 12 pcs + extra 2 pcs	3 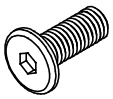 Bolt M6 x 15 mm 52 pcs + extra 3 pcs
4  M6 x 1 mm Washers 92 pcs + extra 3 pcs	5  Eru M6 14 pcs + extra 2 pcs	6 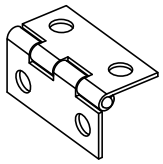 Hinger 8 pcs
7 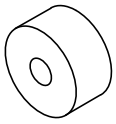 M6 x 20 x10 mm Washers 8 pcs + extra 1 pc	8 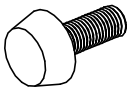 Feet cap M6 x 15 mm 14 pcs + extra 2 pcs	9 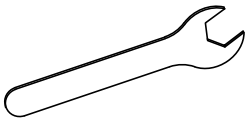 Spanner (1 pc)
10 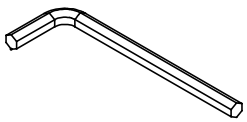 Allen key M4 (2 pcs)		

CARTON CONTENT:

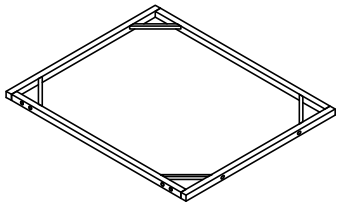

C x 2

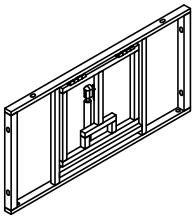

F x 2

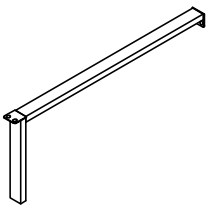

G x 2

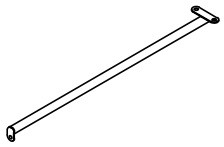

H x 4

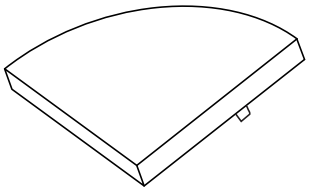

K x 2

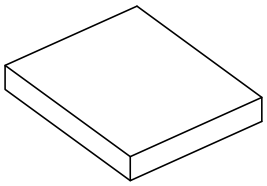

J x 2



HARDWARE

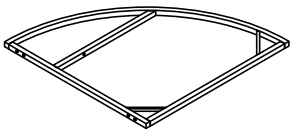

A x 2

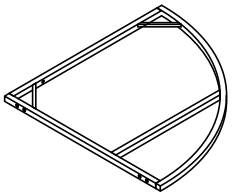

B x 2

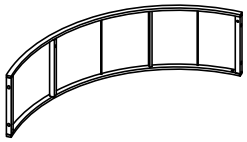

D x 2

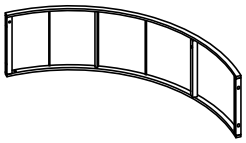

E x 2

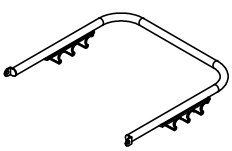

I x 4

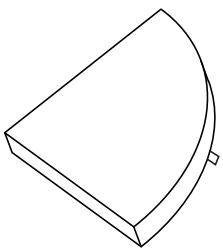

L x 2

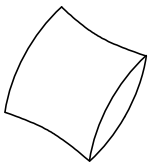

M x 2

STEP 1

Connect Back Right Frame (A) & Hip Back Frame (I) with Hinger (6), Bolt (2), (3) & Washers (4), (7)

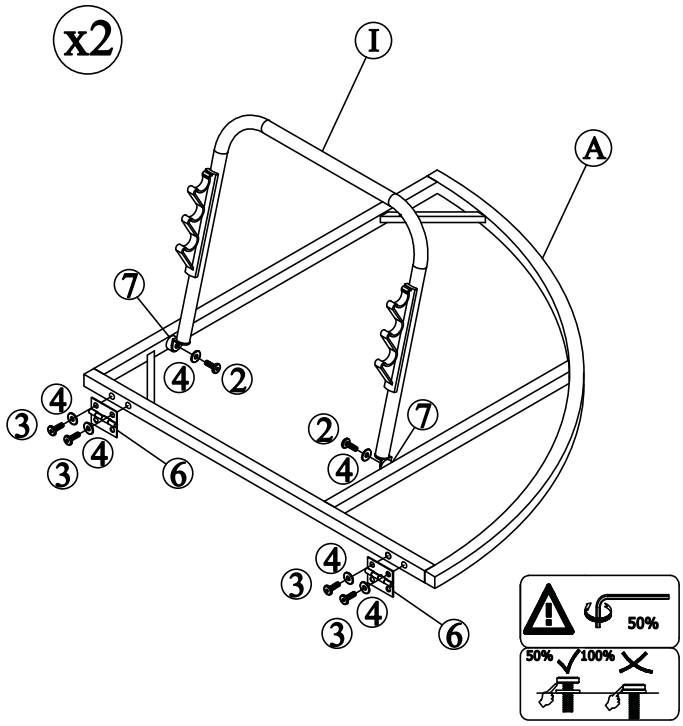

A*1	I*1	②*2	③*4	④*6	⑥*2	⑦*2

STEP 2

Connect Back Left Frame (B) & Hip Back Frame (I) with Hinger (6), Bolt (2), (3) & Washers (4), (7)

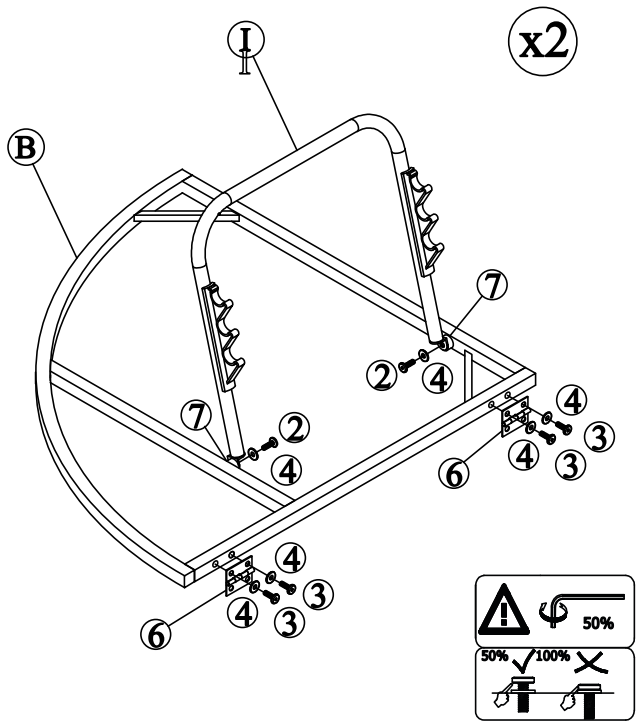

B*1	I*1	②*2	③*4	④*6	⑥*2	⑦*2

STEP 3

Connect part from Step 1 & Seat Frame (C) with Bolt (3) & Washers (4)

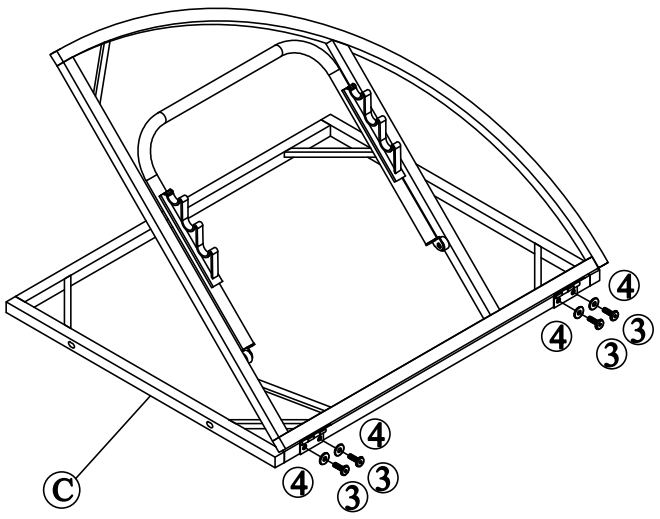

C*1	③*4	④*4

STEP 4

Connect part from Step 2 & part from Step 3 with Bolt (3) & Washers (4)

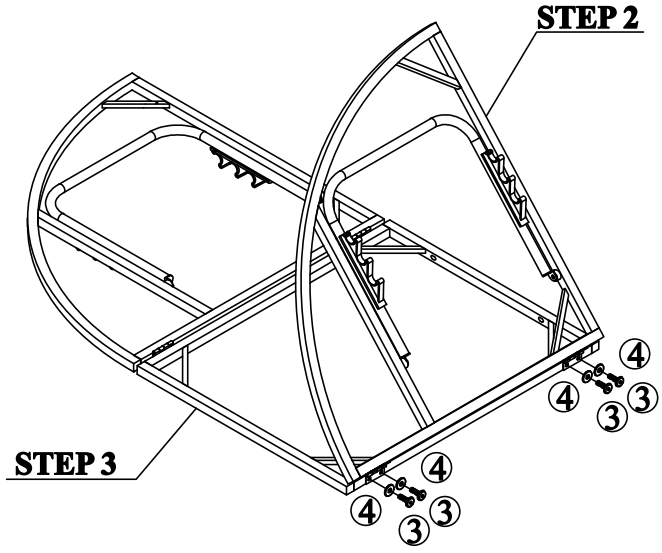

③*4	④*4

STEP 5

Connect part from Step 2 & Seat Frame (C) with Bolt (3) & Washers (4)

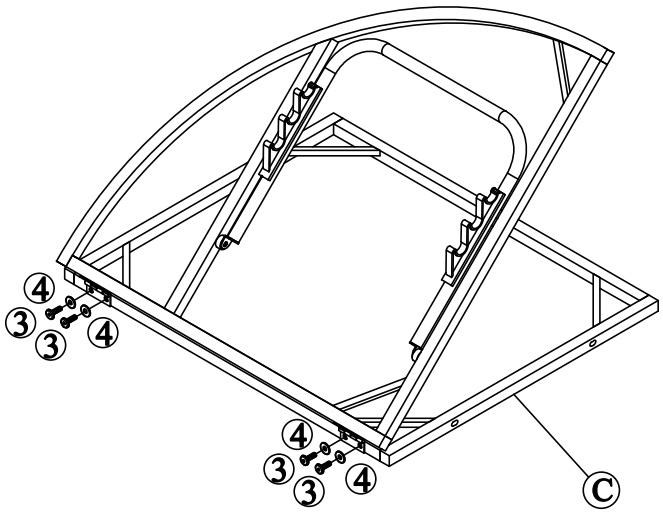

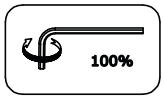

C*1 | ③*4 | ④*4

STEP 6

Connect part from Step 1 & part from Step 5 with Bolt (3) & Washers (4)

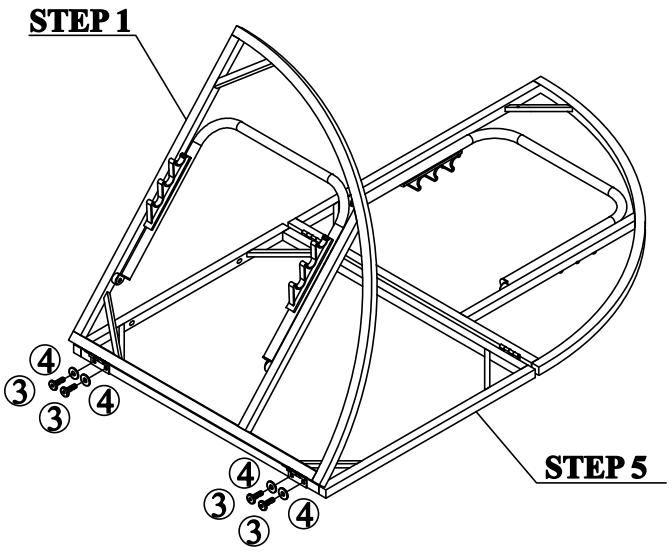

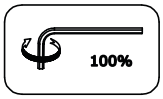

③*4 | ④*4

STEP 7

Connect part from Step 4 & part from Step 6 with Bolt (1), Washers (4) & Eru (5)

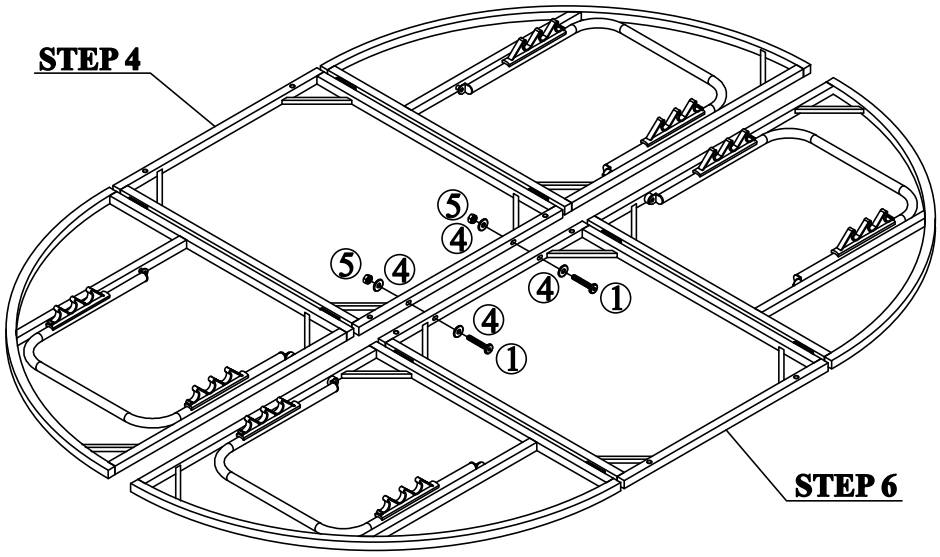

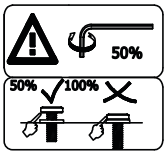

①*2 | ④*4 | ⑤*2

STEP 8

Connect part from Step 7 & Side Frame (F) with Bolt (2), Washers (4)

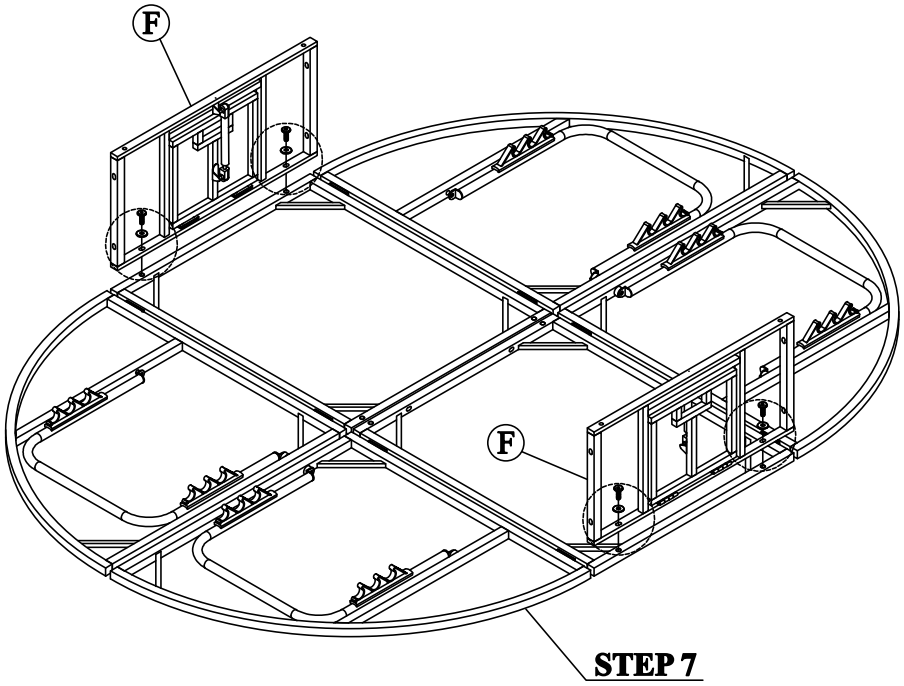

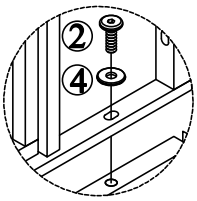

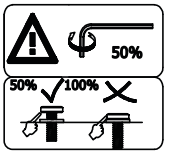

F*2	②*4	④*4

STEP 9

Connect part from Step 8 & Side Right Frame (D), Side Left Frame (E) with Bolt (1), Washers (4) & Eru (5)

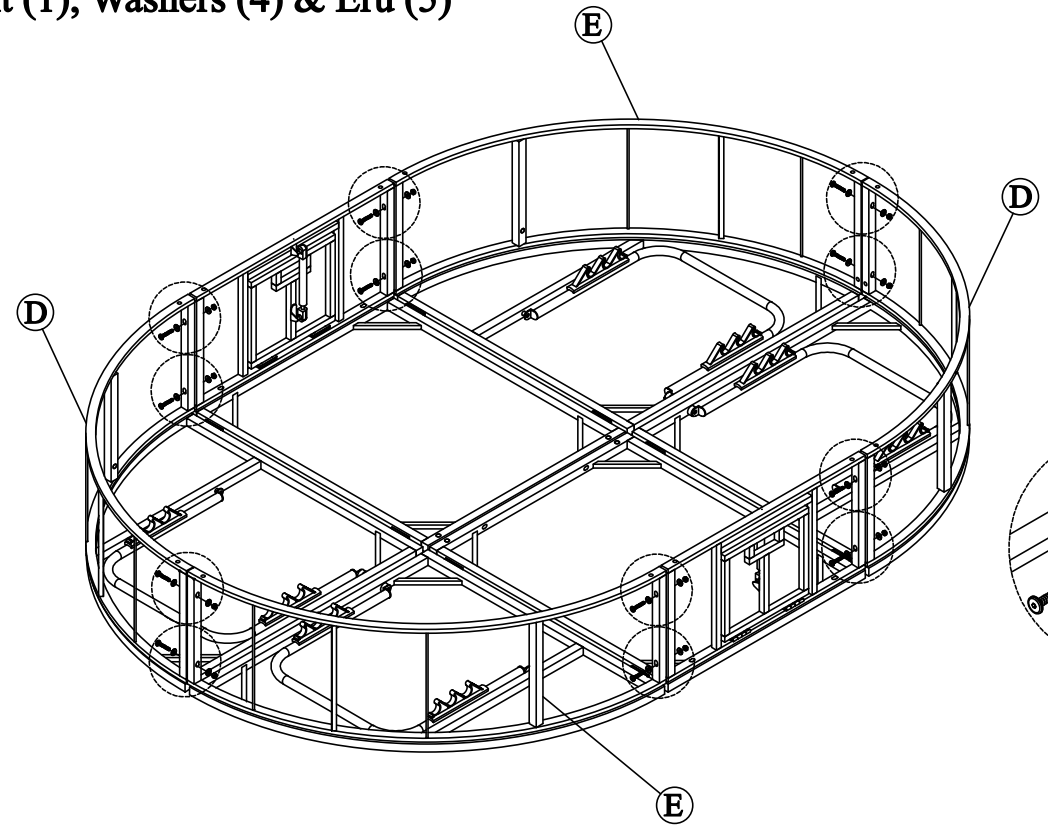

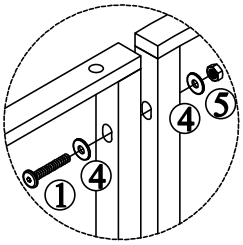

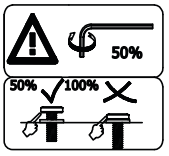

D*2	E*2	①*12	④*24	⑤*12

STEP 10

Connect part from Step 9 & Leg Frame (G) with Bolt (3) & Washers (4)

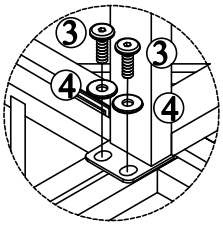

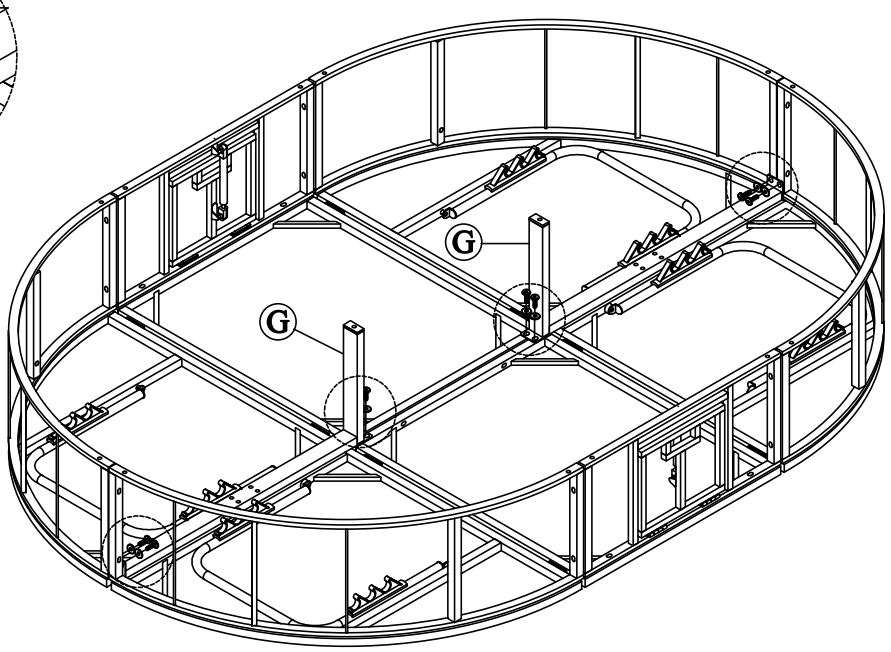

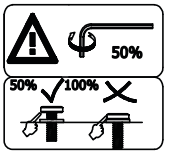

G*2	③*8	④*8

STEP 11

Connect part from Step 10 & Stretcher (H) with Bolt (3) & Washers (4)

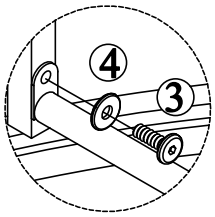

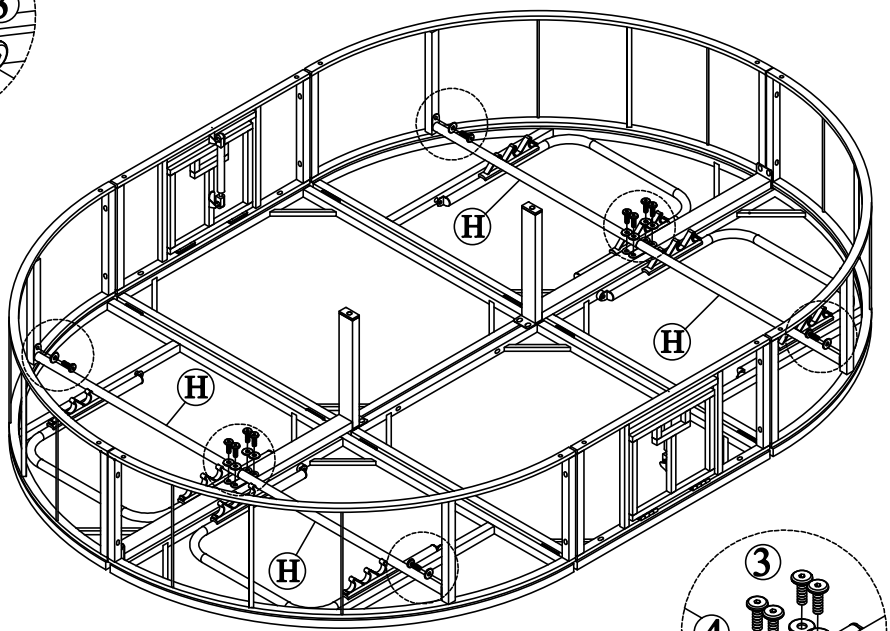

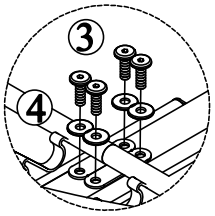

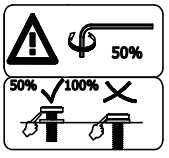

H*4	③*12	④*12

STEP 12

Connect part from Step 11 with Feet cap (8)

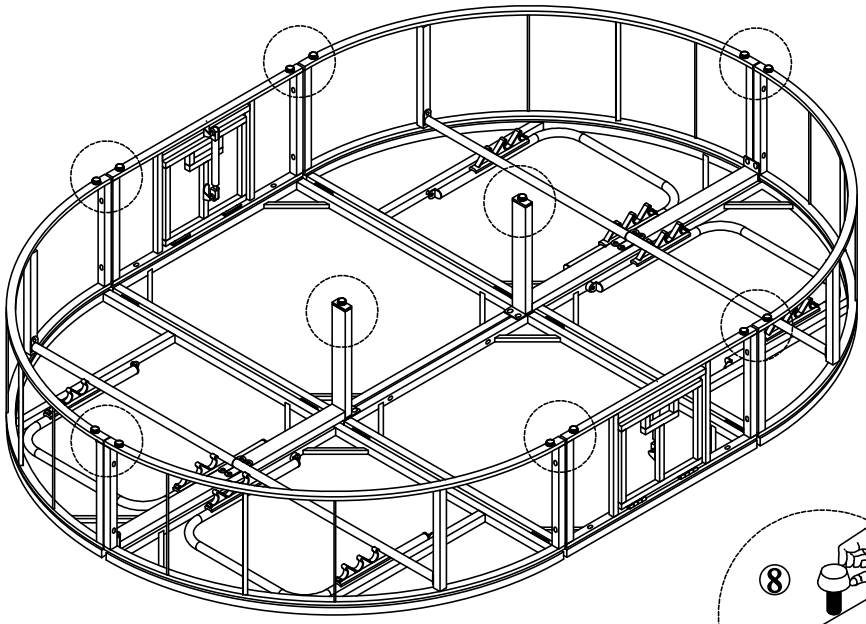

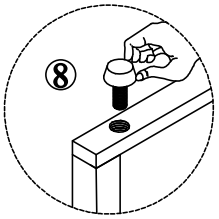

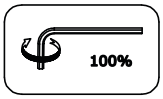

⑧*14

STEP 13

Put on Right Cushion (K), Left Cushion (L), Middle Cushion (J) & Pillow (M) to complete Sun Lounger

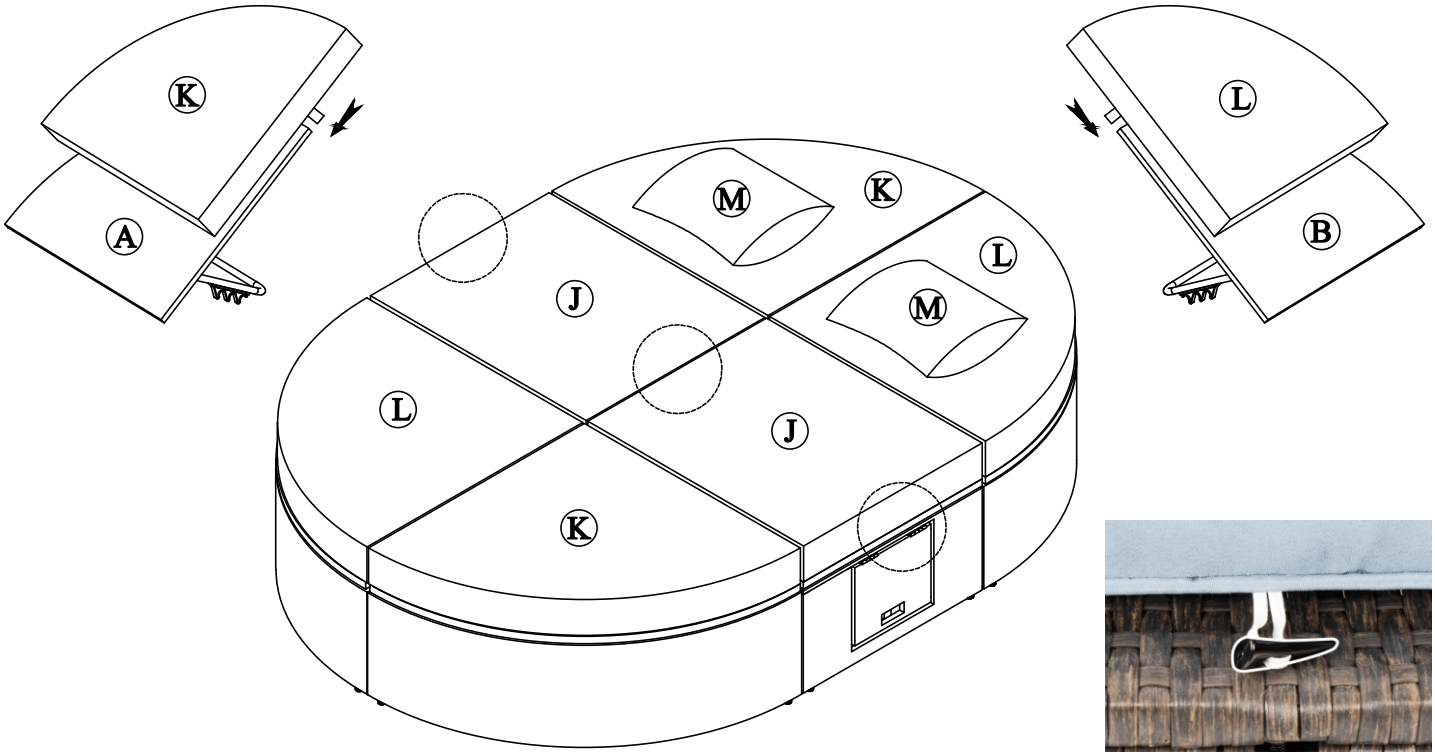

K*2 L*2 J*2 M*2

1

The horn button design can help you to effectively fix cushion



2

Find the place where you want to fix the location and open the rattan to insert horn button



3

When fully inserted, it has spare tape to increase the cushion movement space



4

The cushion fixation is completed, if you any other problem, please contact seller



Combination and Arrangement

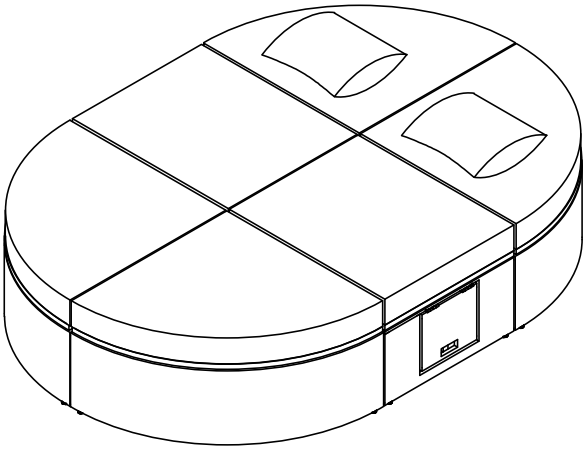

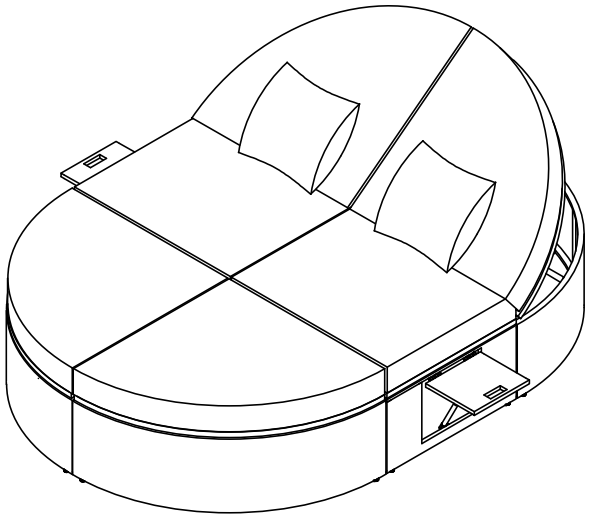

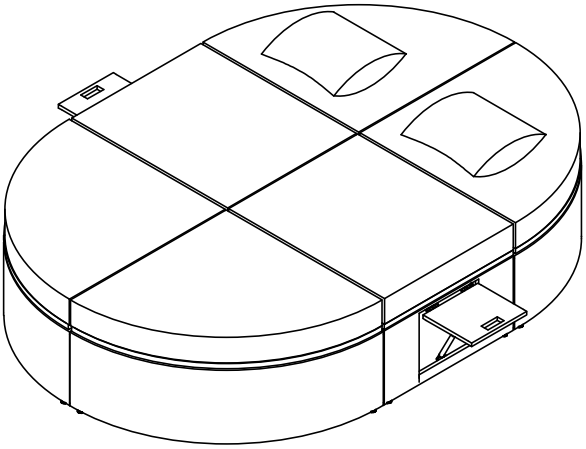

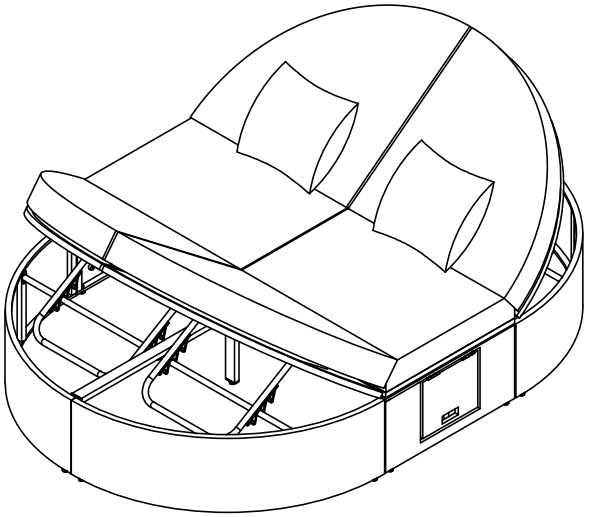

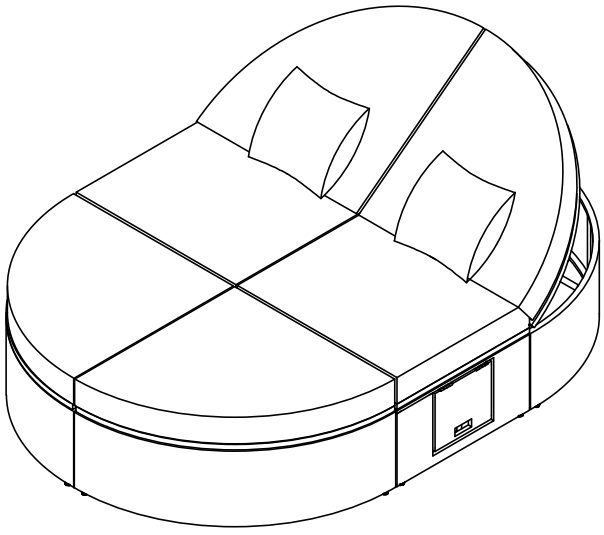

FINISH