BAR STOOL
Assembly Instruction

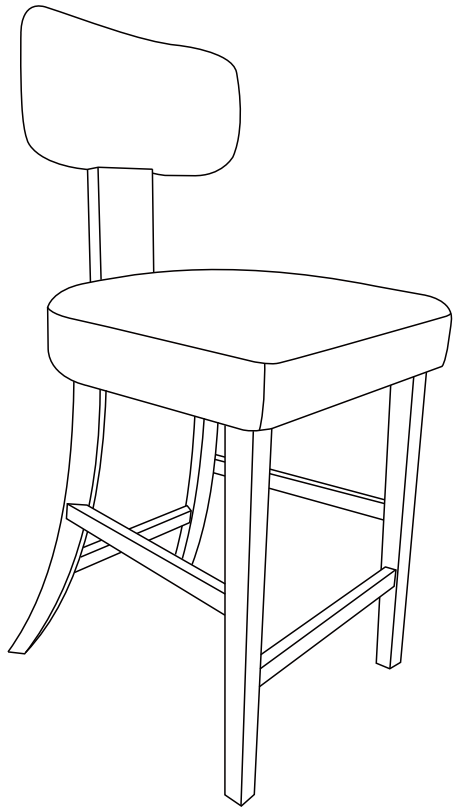

Any question please feel free to contact us:
We will provide further assistance within 24 hours.

Dear Customers,

Thank you for perchasing our product. Please read this instruction manual carefully after receiving this product. It will help you assemble this product quickly, safely and correctly. You can keep this manual for future reference.

CHAIR

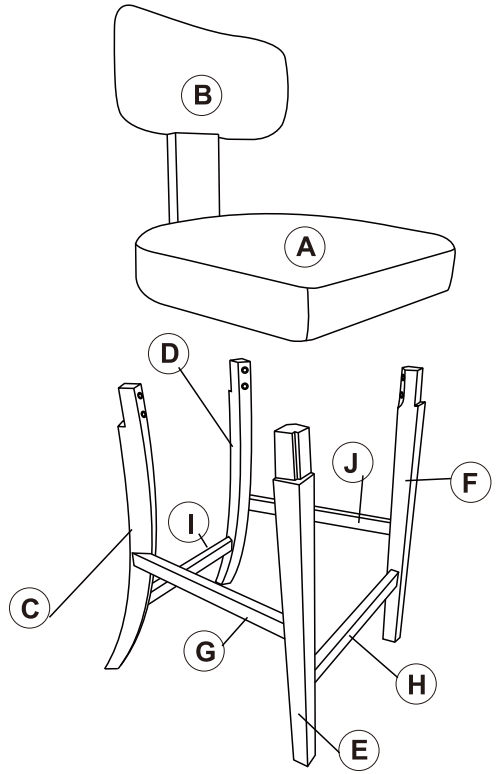

Hardware parts

K Bolts M8x50mm  x8	L Bolts M6x55mm  x4	M Washers M8  x8	N Screws M4x40 mm x8
O Plastic Capsr  x4	P Wrench M6  x1		

Main structure accessories

A Seat 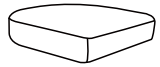 x1	B Back 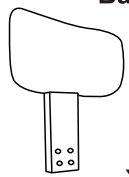 x1	C Rear leg-R  x1	D Rear leg-L  x1	E Front leg-R  x1
F Front leg-L  x1	G Crosspiece 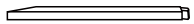 x1	H Crosspiece 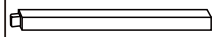 x1	I Crosspiece x1	J Crosspiece x1

STEP1

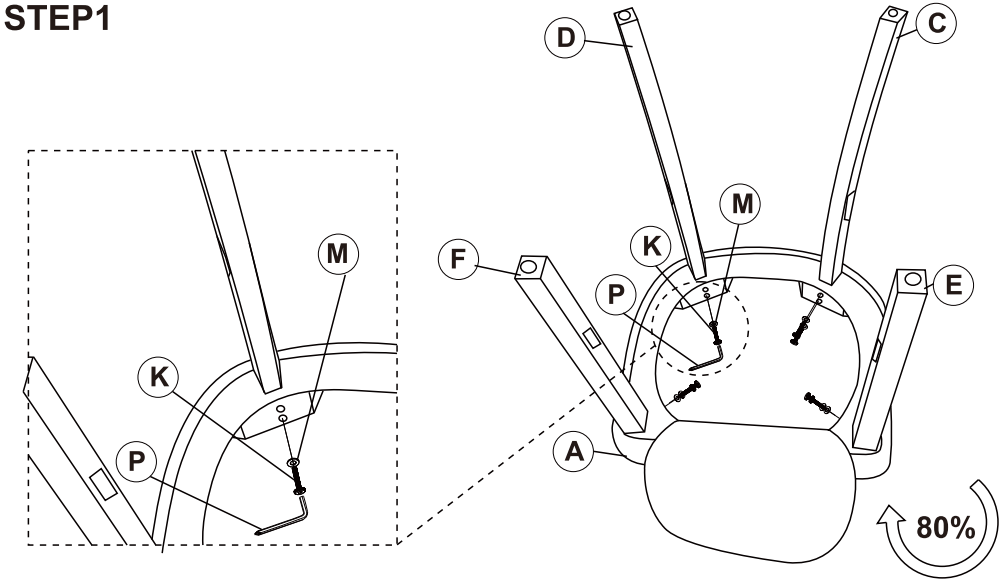

Note:
Screwing Ⓚ on the chair(tighten 80% of screws first),
It might help you assemble more easily.

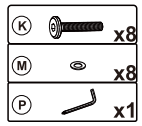

STEP2

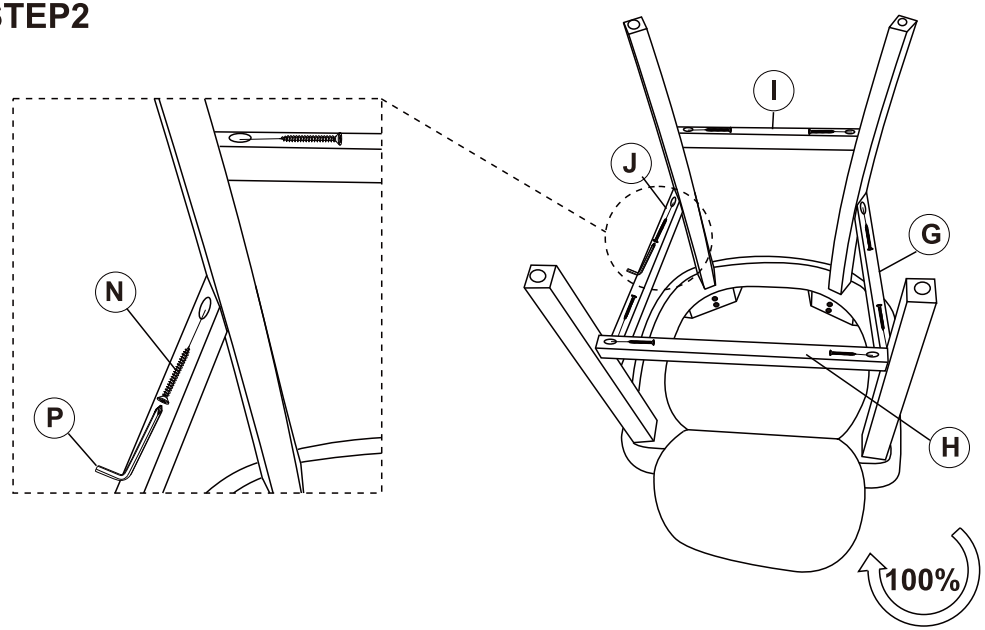

Note:
Screwing Ⓝ on the chair(tighten 100% of screws first),
It might help you assemble more easily.

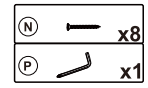

STEP3

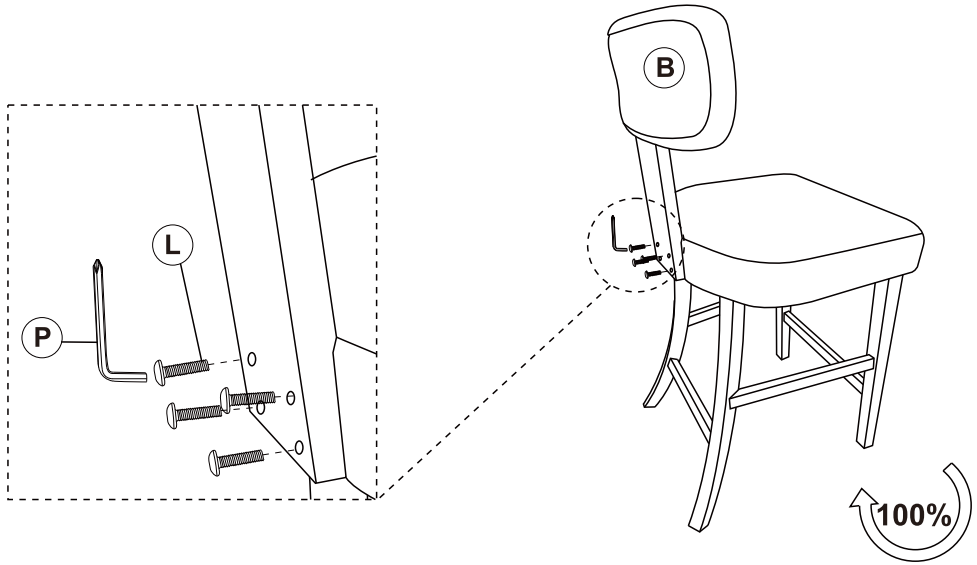

Note:
Screwing Ⓛ on the chair(tighten 100% of screws first),
It might help you assemble more easily.

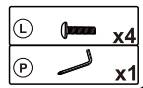

STEP4

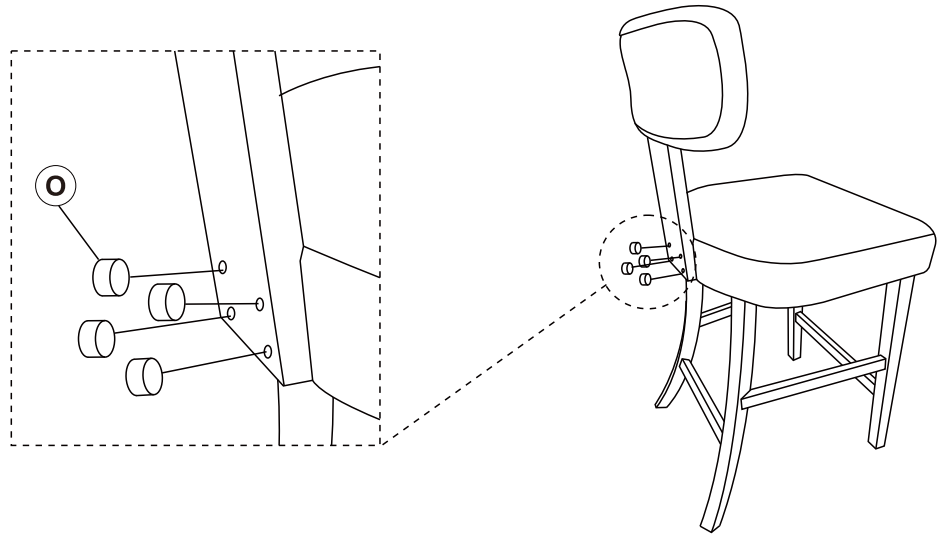

Note:
Put Ⓞ on the chair.



STEP5

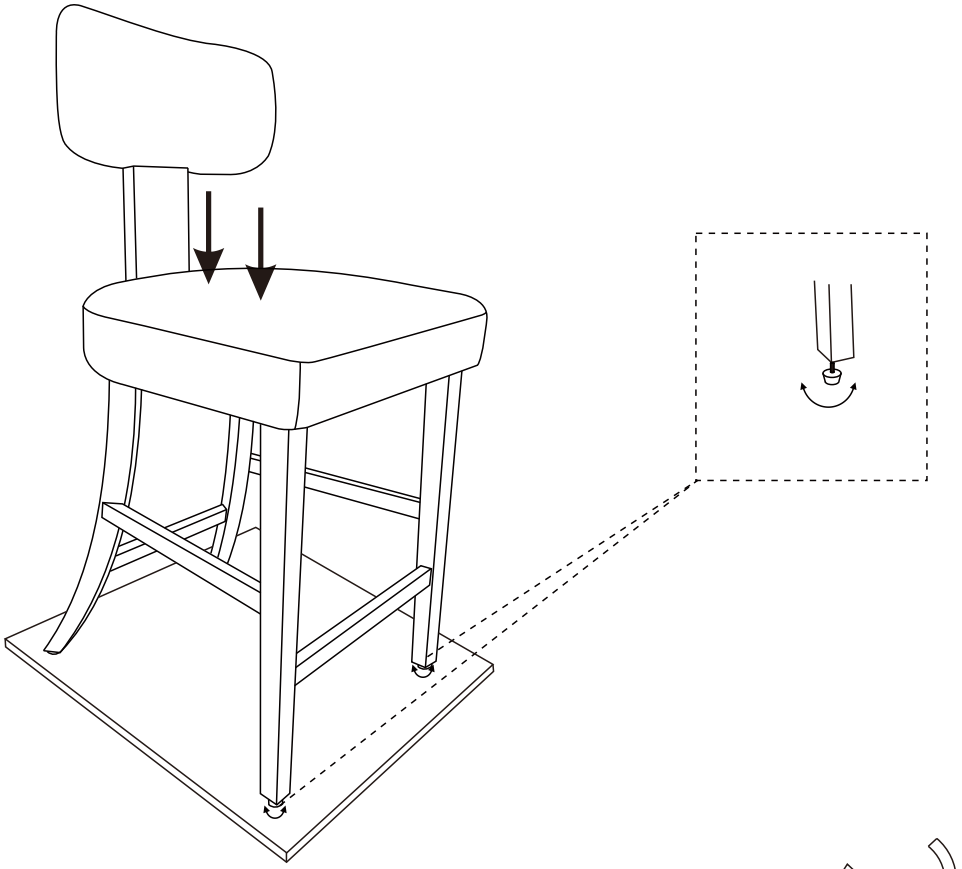



Note:
Ensure the chair is stable on the ground and doesn't require any adjustments,then tighten all screws to 100%.

STEP6

