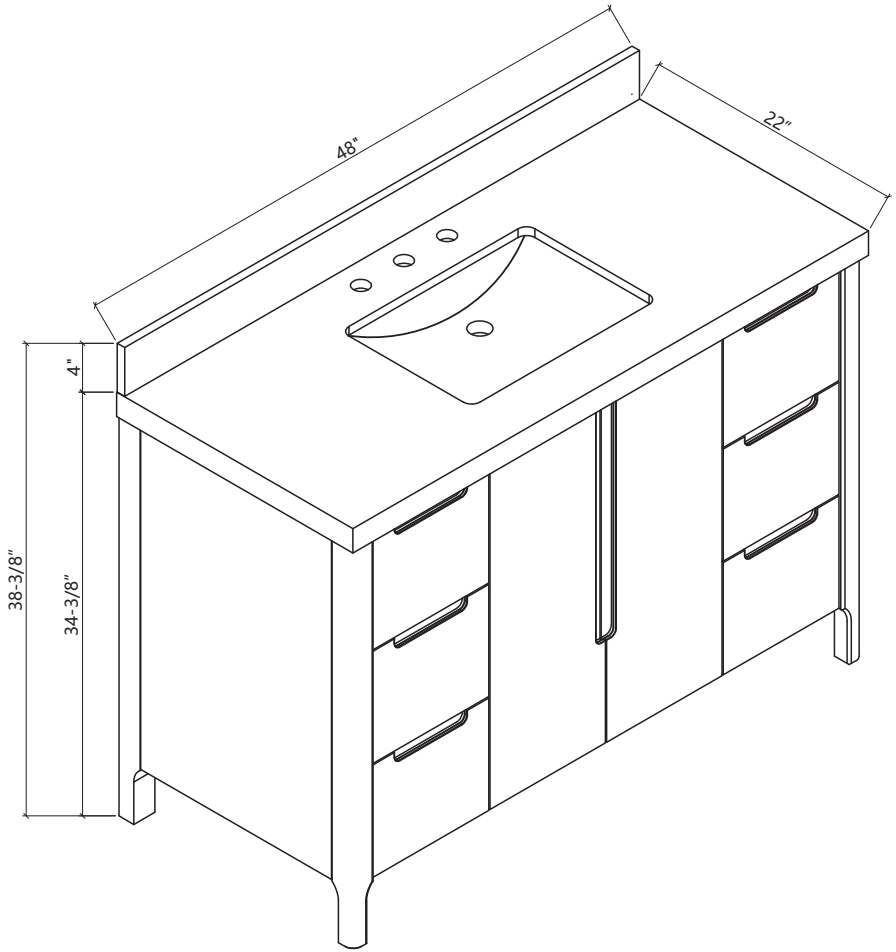
48"
22"
4"
38-3/8"
34-3/8"

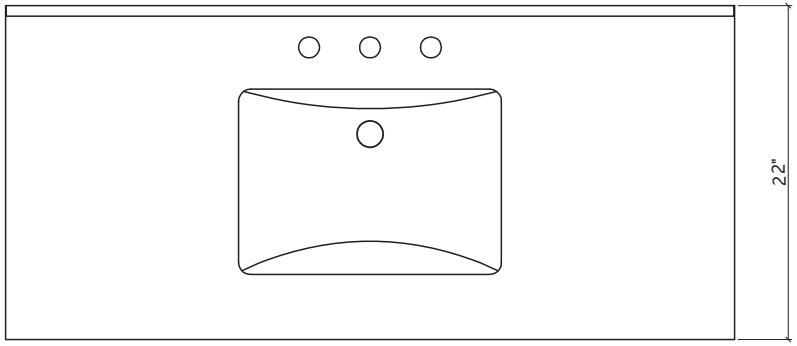
22"

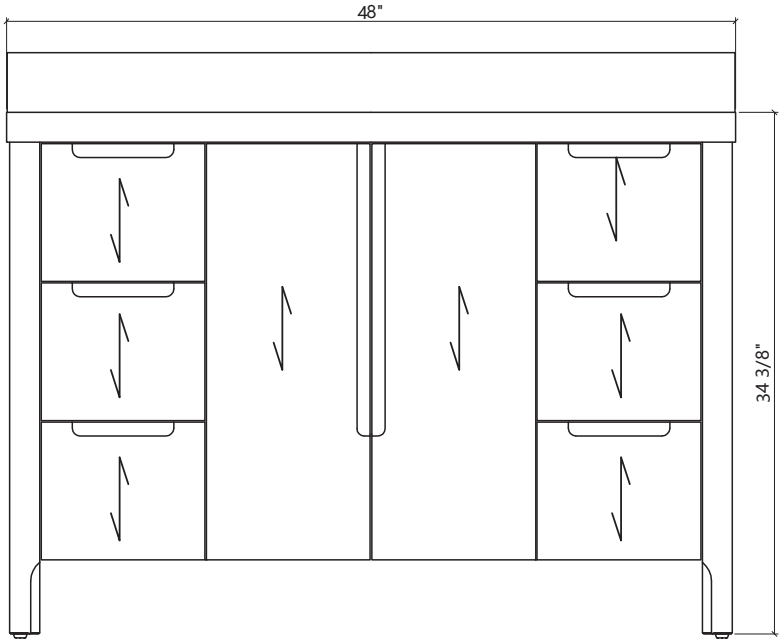
48"
34 3/8"

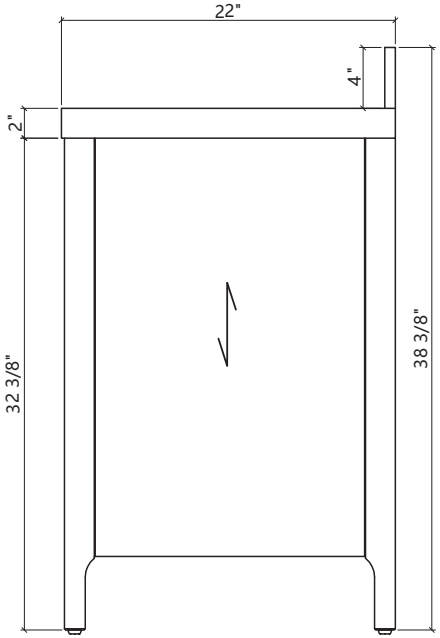
22"
4"
2"
32 3/8"
38 3/8"

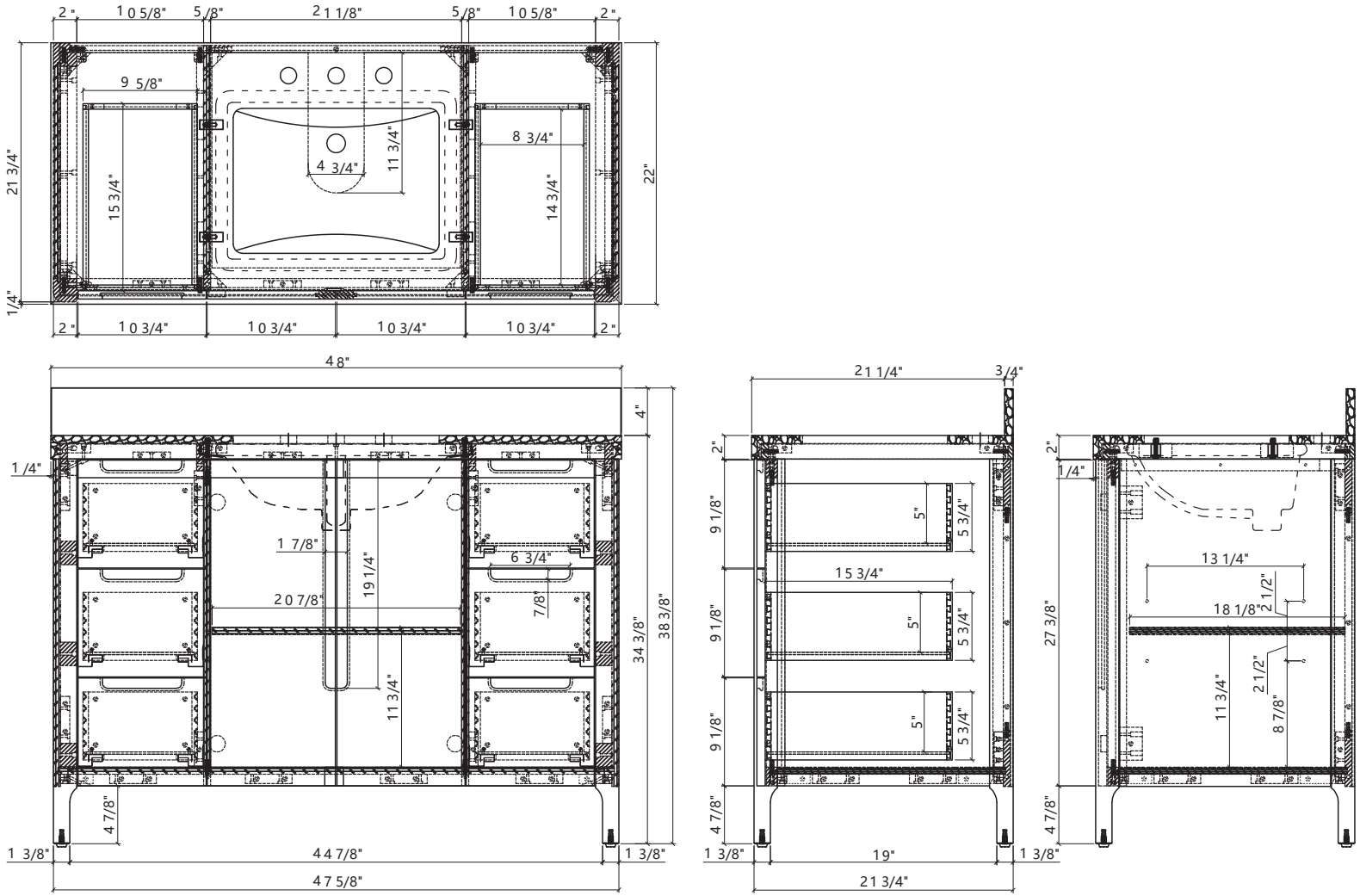
2"
10 5/8"
5/8"
21 1/8"
5/8"
10 5/8"
2"
9 5/8"
21 3/4"
15 3/4"
4 3/4"
11 3/4"
8 3/4"
14 3/4"
22"
1/4"
2"
10 3/4"
10 3/4"
10 3/4"
10 3/4"
2"
48"
4"
1 1/4"
1 7/8"
19 1/4"
6 3/4"
20 7/8"
7/8"
34 3/8"
38 3/8"
11 3/4"
4 7/8"
1 3/8"
44 7/8"
1 3/8"
47 5/8"
21 1/4"
3/4"
2"
9 1/8"
5"
5 3/4"
15 3/4"
9 1/8"
5"
5 3/4"
9 1/8"
5"
5 3/4"
4 7/8"
1 3/8"
19"
1 3/8"
21 3/4"
2"
1 1/4"
13 1/4"
2 1/2"
18 1/8"
27 3/8"
2 1/2"
11 3/4"
8 7/8"
4 7/8"

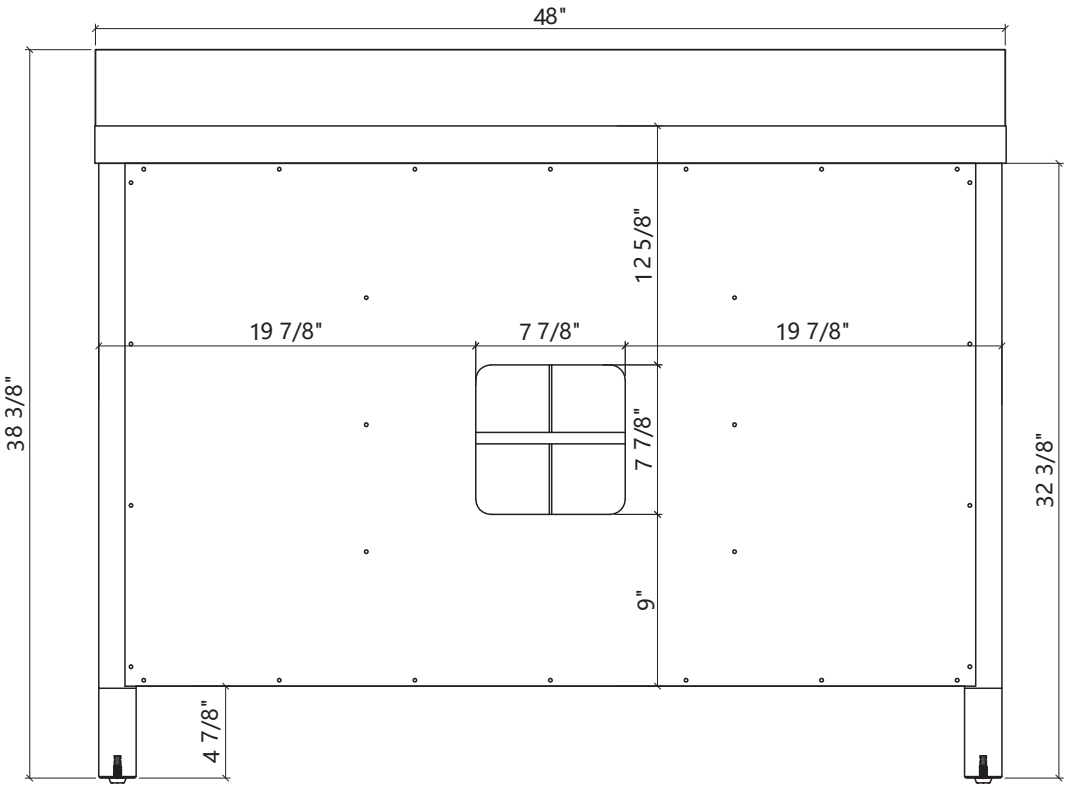
48"
38 3/8"
32 3/8"
12 5/8"
19 7/8"
7 7/8"
19 7/8"
7 7/8"
9"
4 7/8"

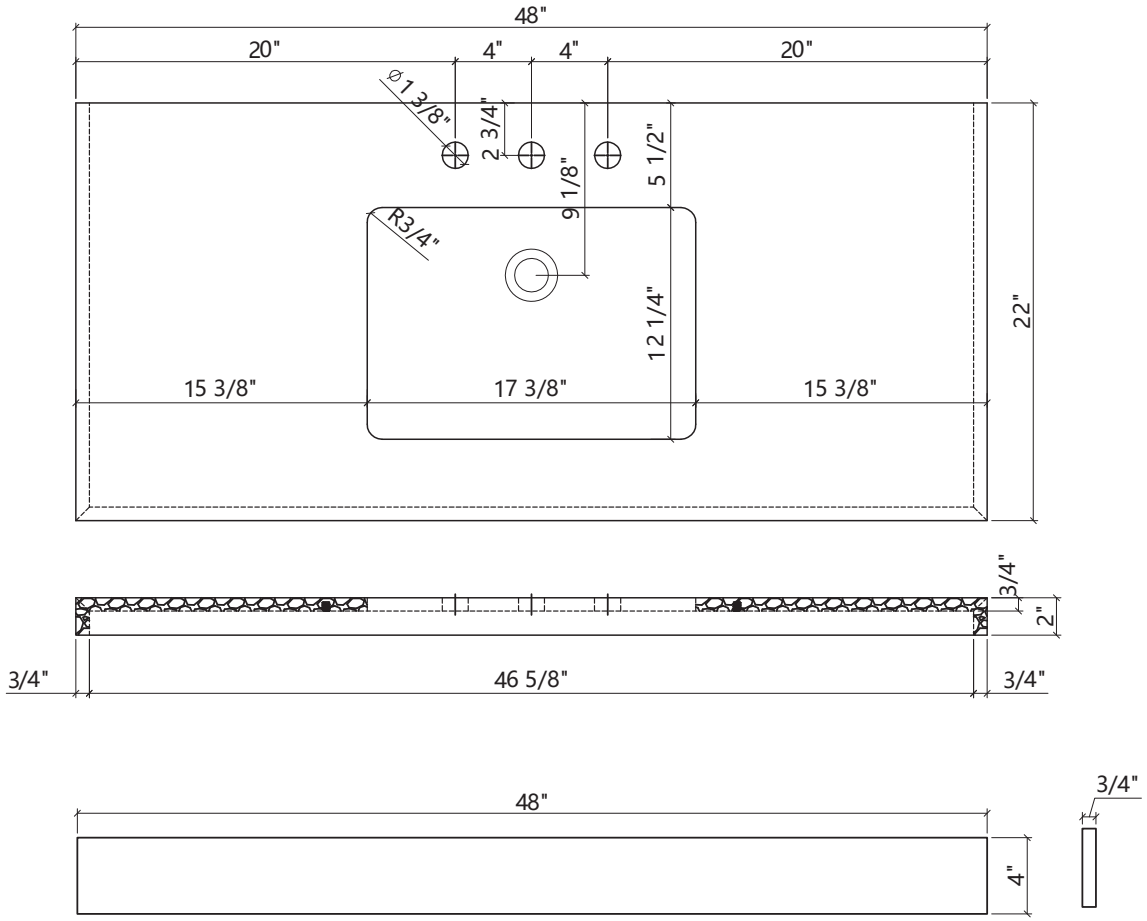
48"
20"
4"
4"
20"
Ø1 3/8"
2 3/4"
9 1/8"
5 1/2"
R3/4"
12 1/4"
22"
15 3/8"
17 3/8"
15 3/8"
3/4"
2"
3/4"
46 5/8"
3/4"
48"
4"
3/4"

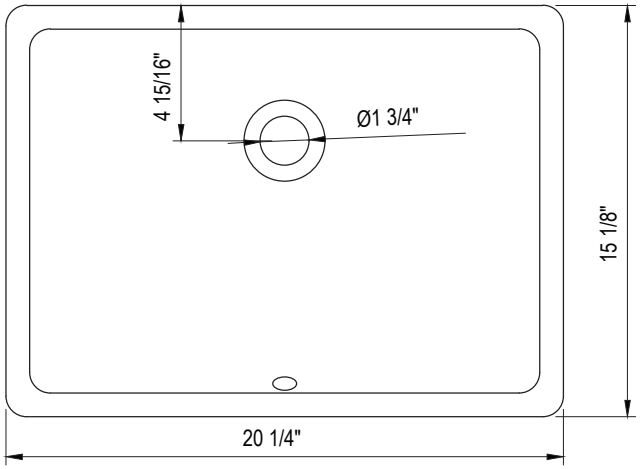
4 15/16"
Ø1 3/4"
15 1/8"
20 1/4"

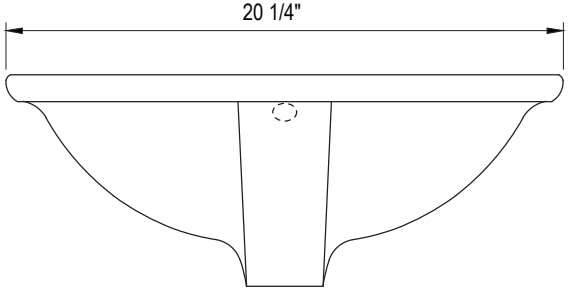
20 1/4"

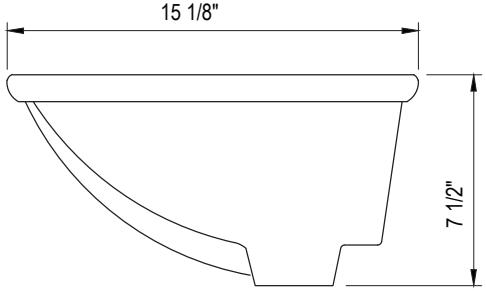
15 1/8"
7 1/2"

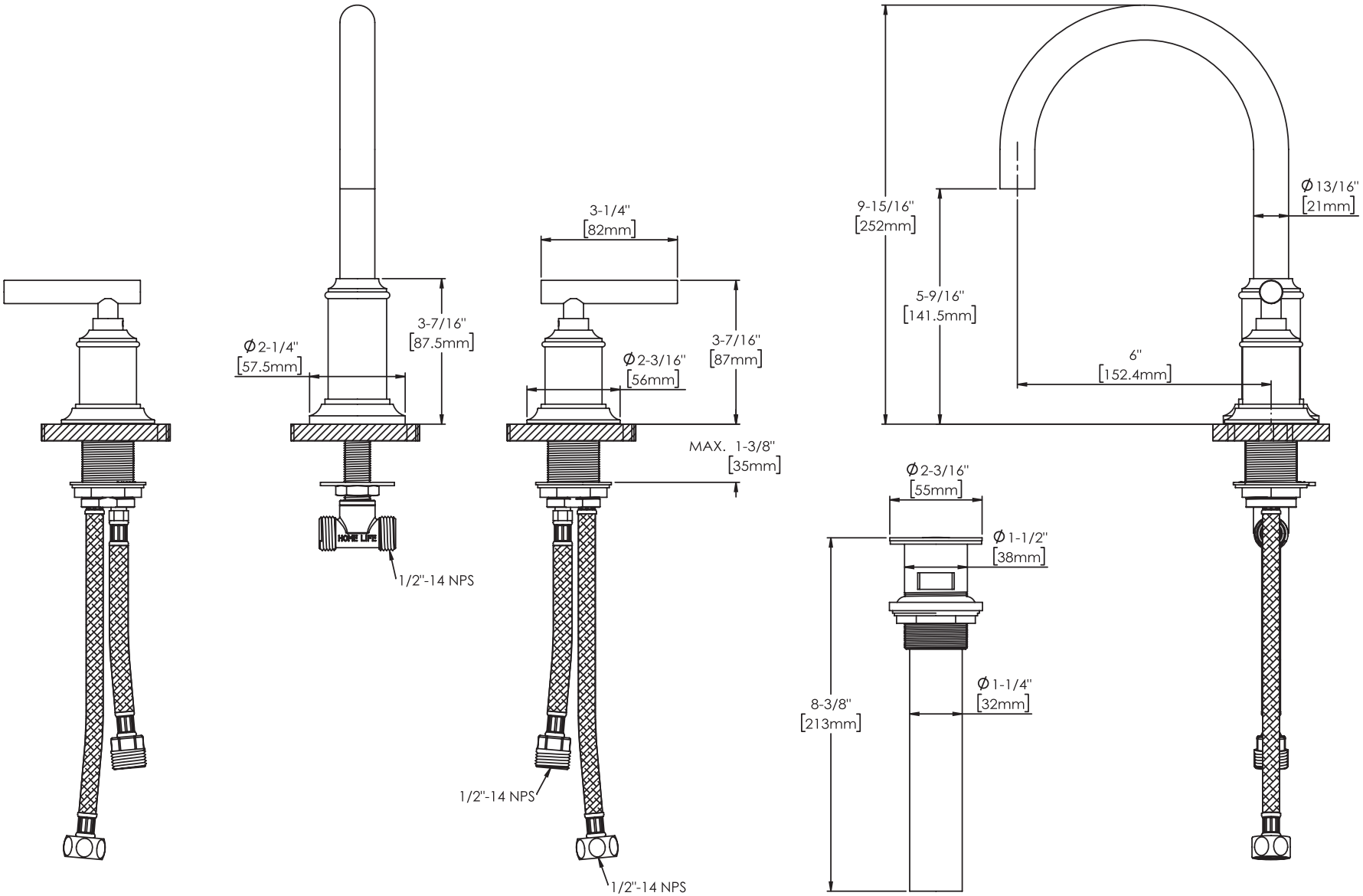
3-7/16"
[87.5mm]
Ø2-1/4"
[57.5mm]
HOME LIFE
1/2"-14 NPS
3-1/4"
[82mm]
3-7/16"
[87mm]
Ø2-3/16"
[56mm]
MAX. 1-3/8"
[35mm]
1/2"-14 NPS
1/2"-14 NPS
9-15/16"
[252mm]
5-9/16"
[141.5mm]
6"
[152.4mm]
Ø13/16"
[21mm]
Ø2-3/16"
[55mm]
Ø1-1/2"
[38mm]
Ø1-1/4"
[32mm]
8-3/8"
[213mm]

2024-12-19