# QUEEN
# BED FRAME ASSEMBLY

## Components

| ITEM | DESCRIPTION | QTY |
|---|---|---|
| A | Metal Corners | 4 |
| B | Metal Side Rail | 2 |
| C | Metal End Rail | 2 |
| D | Corner Leg | 4 |
| E | Center Support Rail | 1 |
| F | Center Support Leg | 3 |
| G | Upholstered Side Rail | 2 |
| H | Upholstered Foot Rail | 1 |

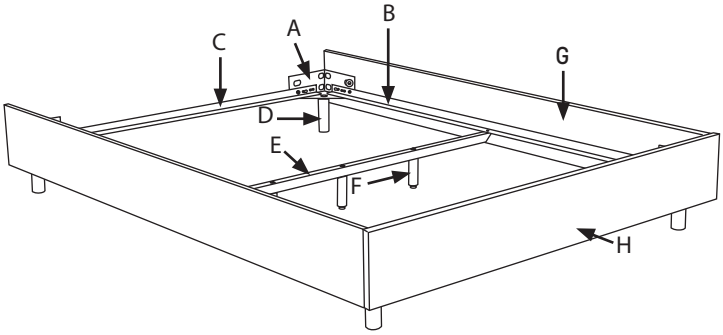


*Please note: actual product may look different than illustration.*

### HARDWARE

**(H1)** x 10 — 1/4" bolt

**(H2)** x 10 — 1/4" nut

**(H3)** x 4 — 3/4" x 5/16" bolt

**(H4)** x 4 — 3/4" washer *larger hole*

**(H5)** x 3 — 1" x 1/4" bolt

**(H6)** x 3 — 3/4" washer *smaller hole*

**(H7)** x 6 — 1" x 5/16" bolt

**(H8)** x 6 — 1 1/4" washer

**(H9)** x 1 — smaller L wrench

**(H10)** x 1 — larger L wrench

**(H11)** x 1 — wrench

**(H12)** x 8 — 3/4" screw *optional*

**(H13)** x 2 — L bracket *optional*

*Please note: assembly is recommended with two people. You will need a flat head and phillips head screwdriver to assemble your bed frame.*

# Step 1

**1.1**

Place (A) metal corners in a rectangular shape roughly the size of your mattress.

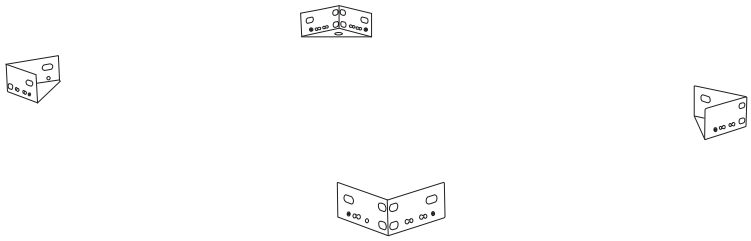

**1.2**

Lay (B) and (C) metal rails into (A) metal corners to create the shape of your bed frame. Snap into place.

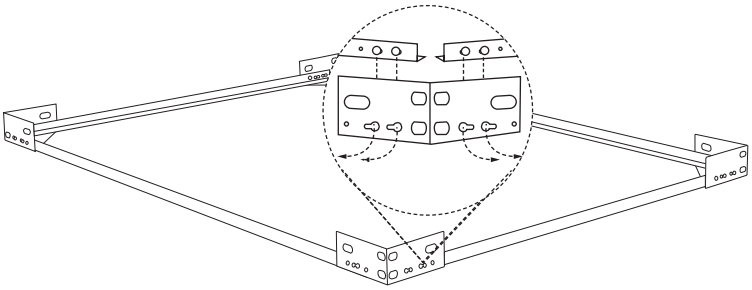

**1.3**

Secure (B, C) metal rails to (A) metal corners using (H1) bolts and (H2) nuts. Tighten using (H9) L wrench and (H11) wrench.

*Please note: (H2) nuts should be on the inside of the frame.*

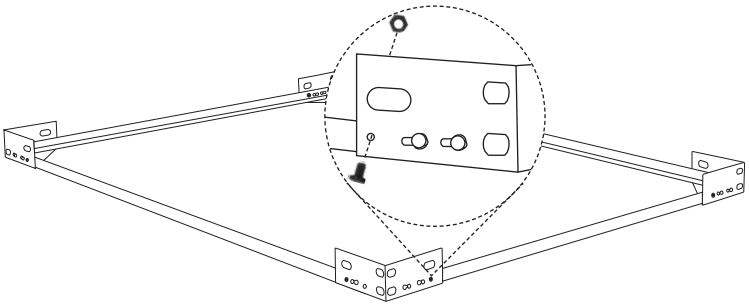

**1.4**

Carefully attach (D) corner legs underneath (A) metal corners using (H3) bolts and (H4) washers. Tighten using (H10) L wrench.

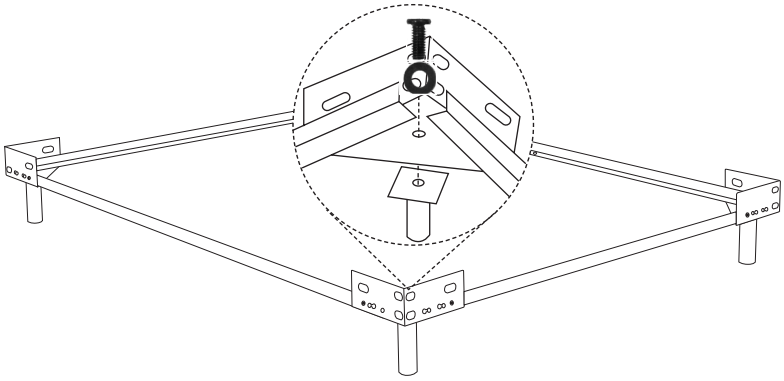

# Step 2

**2.1**

Align holes of (E) center support rail with holes on (B) metal side rails. Attach using (H1) bolts and (H2) nut. Tighten using (H9, H11) wrenches.

*Please note: Position (E) center support rail with side wall facing headboard. (E) center support attaches underneath (B) metal side rails.*

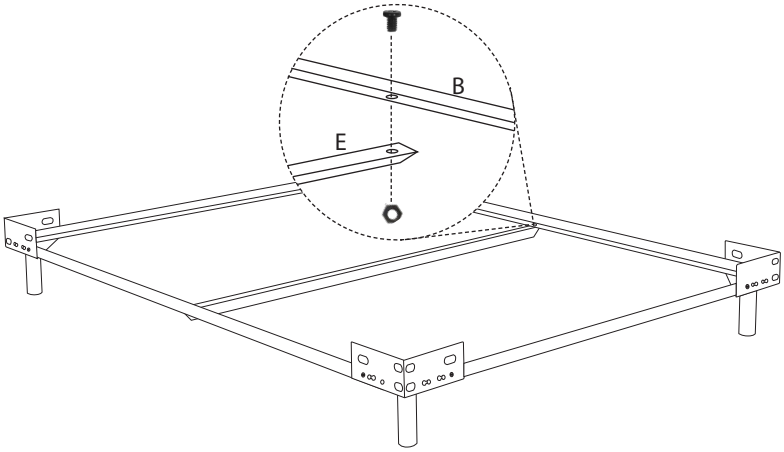


**2.2**

Attach (F) center support legs to (E) center support rail using (H5) bolts and (H6) washer. Tighten using (H9) L wrench.

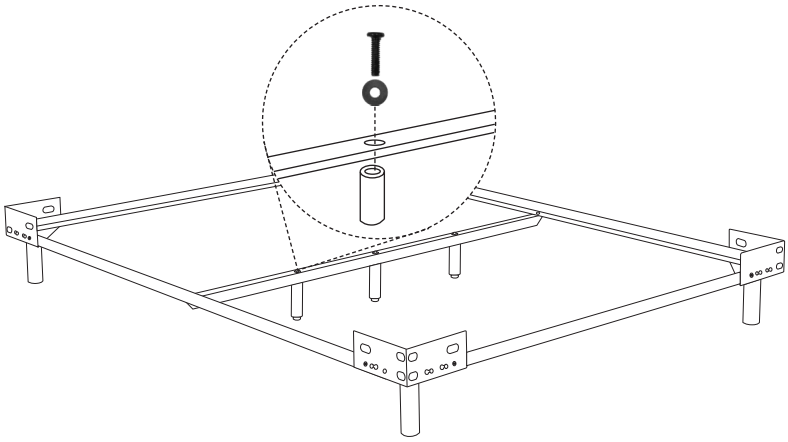

# Step 3

### 3.1

Loosely attach (G, H) upholstered rails to bed frame using (H7) bolts and (H8) washers.

*Please note: if (G) upholstered side rails have an additional hole, make sure the hole faces upwards and away from the (H) upholstered foot rail.*

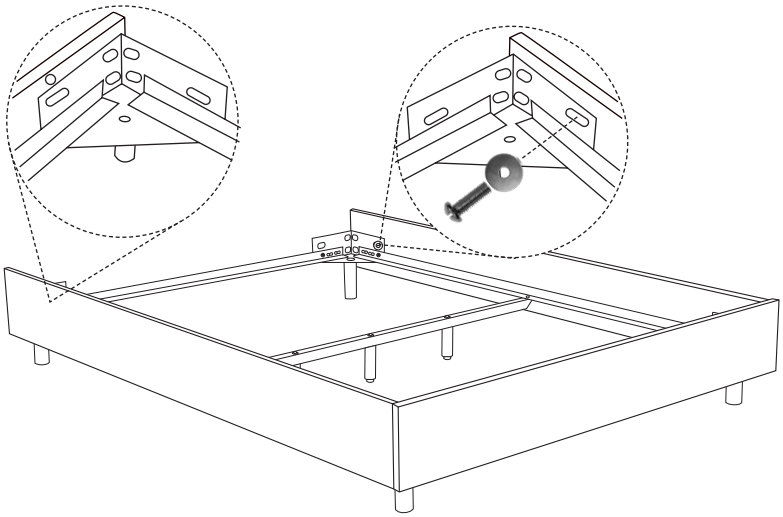

### 3.2

Push (G) upholstered side rails toward (H) upholstered foot rail to eliminate any gaps. Tighten (G) upholstered side rails first, then (H) upholstered foot rail using flat head screwdriver.

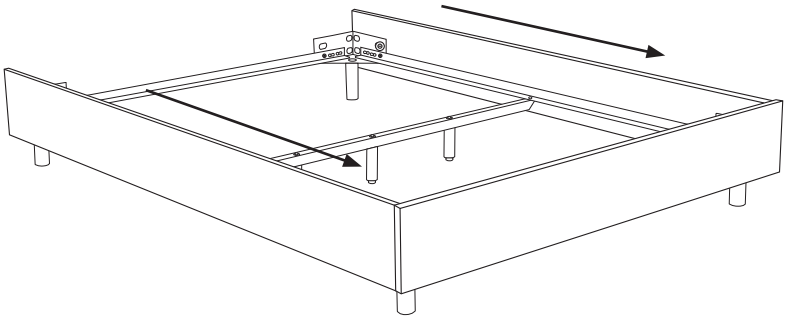

### 3.3 (OPTIONAL)

To reinforce stability of (G, H) upholstered rails, use a phillips screwdriver to attach (H13) L brackets using (H12) screws.

*Please note: this requires screwing (H12) directly into the upholstered side rail.*

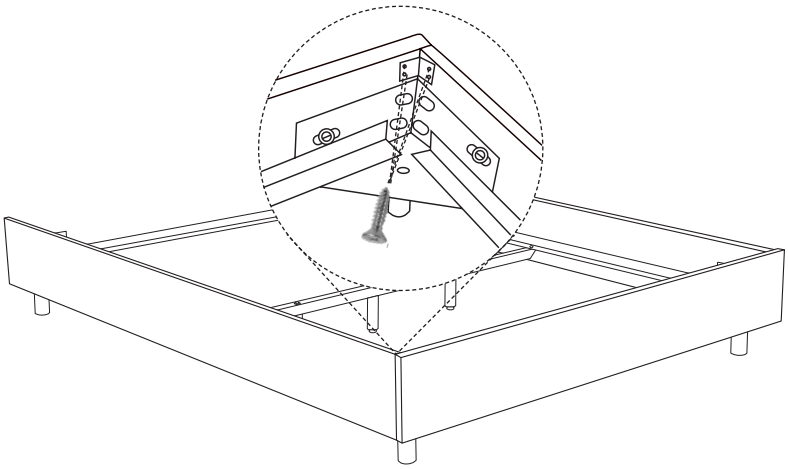

### ATTACHING YOUR HEADBOARD

*For instructions on how to attach your headboard to your bed frame, please consult the assembly instructions found in the box your headboard was shipped in.*

# Warranty

## LIMITED WARRANTY

The manufacturer guarantees its upholstered furniture against defects in construction for a period of one (1) year. When a structural defect is brought to our attention, we will repair or replace it at our option at no charge to the customer (includes parts and labor, not transportation costs). Fabric wearability for upholstered furniture is not covered by the warranty. Vacuum for regular cleaning.

**Please dispose of plastic bag(s) and carton(s) responsibly.**

## LIMITE DE GARANTIA

El fabricante garantiza sus muebles tapizados contra defectos en construccion por un periodo de un (1) ano. Cuando un proble-ma de estructura es traido a nuestra atencion, nosotros repararemos o remplazaremos sin ningun cargo a nuestro cliente (incluye partes y trabajo, no costo en transportacion). Descol-oramiento del material de muebles tapizados no es cubierto por la garantia. Regularmente puede aspirar.

**Por favor tirar bolsa(s) y caja(s) responsablemente.**

## GARANTIE LIMITÉE

Le fabricant garantit son meubles rembourrés contre les défauts de construction pour une durée d'un (1) an. Lorsqu'un défaut structurel est porté à notre attention, nous le réparerons ou le remplace-rons à notre discrétion sans frais pour le cli-ent (comprend les pièces et la main d'œuvre, pas les frais de transport). La portabilité du tissu pour les meubles rembourrés n'est pas couverte par la garantie. Passez l'aspirateur pour un nettoyage régulier.

**Veuillez jeter le(s) sac(s) en plastique et le(s) carton(s) de manière responsable.**