Swivel Armchair
Instruction Manual
HH506

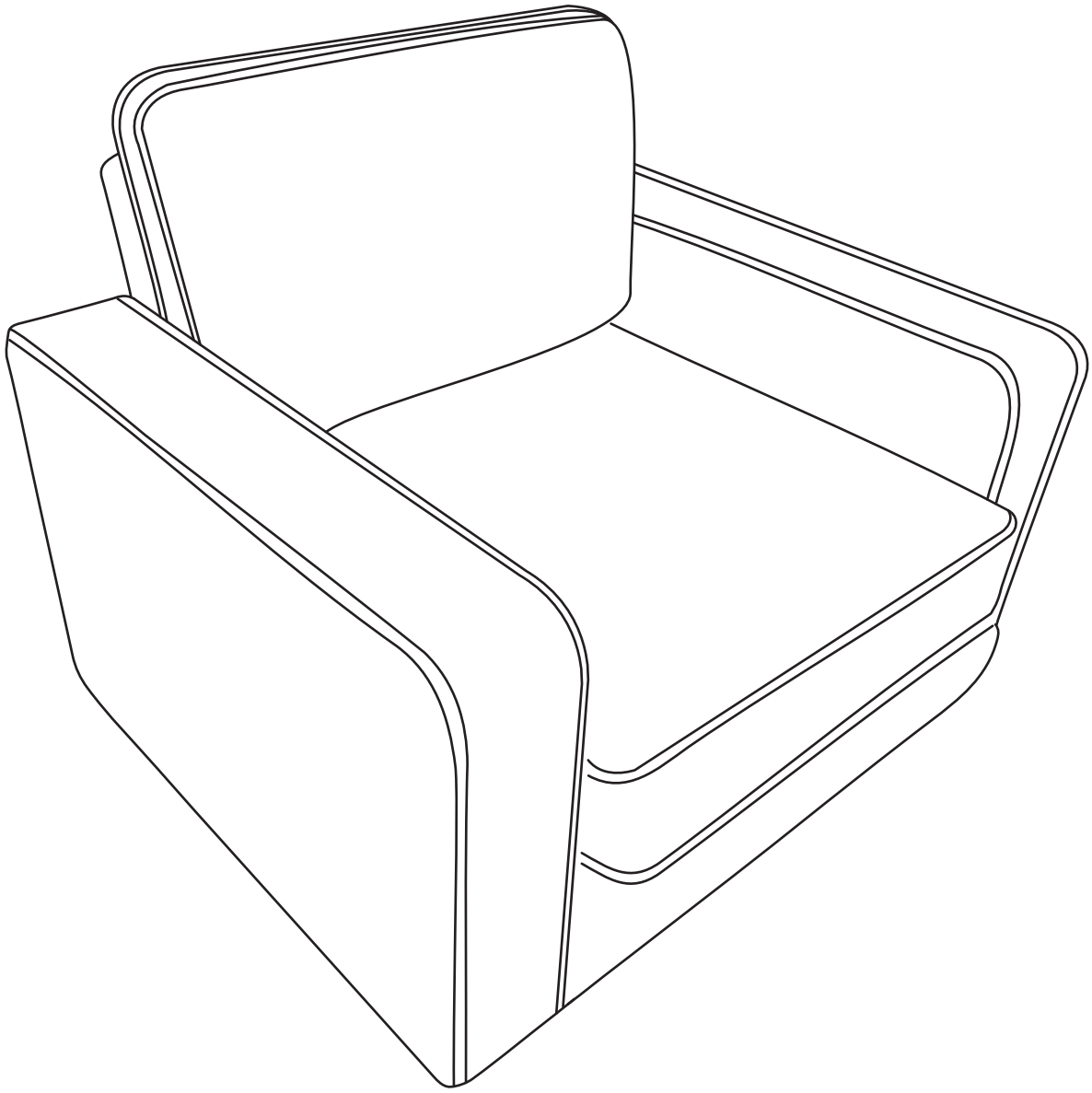

cs@cubewalk.com
+1(573)763-2733

Thank You for Your Purchase! We Hope You Enjoy Your New Furniture

Please read

1. Do not discard any of the packaging until you are certain that you have all the necessary parts for the assembly.
2. Please ensure that the packaging is disposed of in a safe and environmentally responsible way.
3. During assembly, tighten screws by hand only. Once all screws arein place, you may tighten all screws completely.

Caution

1. Never use this chair as a step ladder.
2. Check that screws have not become loosened every 6months. Retighten if necessary.
3. Do not allow children to play with or operate the mechanism.
4. Keep hands and feet clear of mechanism.
5. Only the occupant should operate mechanism.

Usage Troubleshoot

- Adjust the height of the chair to suit your height. If it is not suitable for you, please contact us for help.
- If the chair is tilted to one side or forward, make sure the screws the seat plate are tightened, make sure the chassis is not upside down, and contact us if the problem cannot be resolved.
- If the fabric of the chair is torn or stained when you receive it, please contact us to get the replacement part or compensation.
- If the chassis is broken, please contact us for a replacement or partial refund, please contact us for help.
- If part is missing, please contact us and provide the picture of the missing part, we will replace it.

Accessories List

If any part is missing, please contact our customer service email: cs@cubewalk.com

(A) Backrest Farme 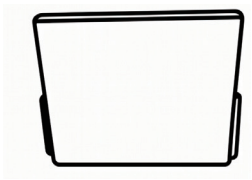	(B) Armrests ×2 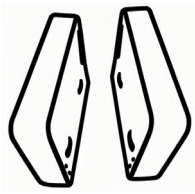	(C) Seat Front Panel 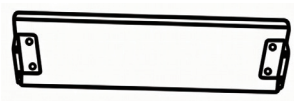	(D) Bottom Plate 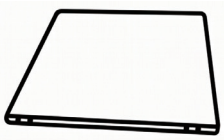
(E) Back Cushion 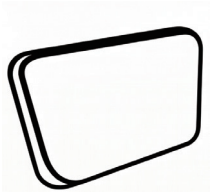	(F) Cushion 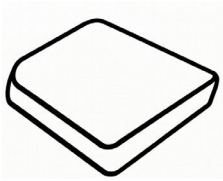	(G) Star Base 	(H) Central Mechanism 
(I) Metal Bracket 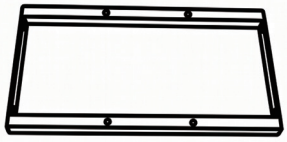	(J) Connecting Plates ×2 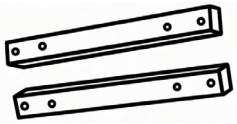	(K) Screws×8 (M6x16mm) 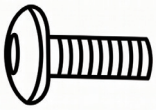	(L) Screws×4 (M6x40mm) 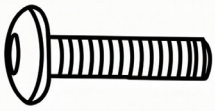
(M) Screws×4 (M6x70mm) 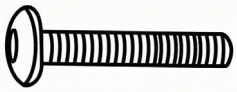	(N) Screws×4 (M8x20mm) 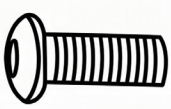	(O) Plastic covers×8 	(P) Hex Wrench 
(Q) Attachment Brackets ×4 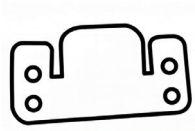	(R) Open-End Wrench 		

An L-shaped hex wrench can tighten screws more effectively. It is recommended to use it on the last few turns of each screw.

Step 1

Use scissors to cut open the vacuum packaging of Seat Cushion (F) and let it unfold naturally. Next, cut open the vacuum packaging of Back Cushion (E) and let it unfold naturally.

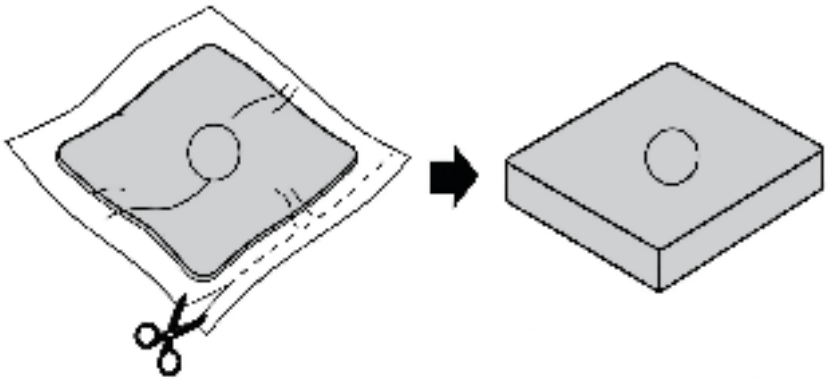

Step 2

Attach swivel mechanism (H) to seat base (G) using screws (M6x16mm) (K).

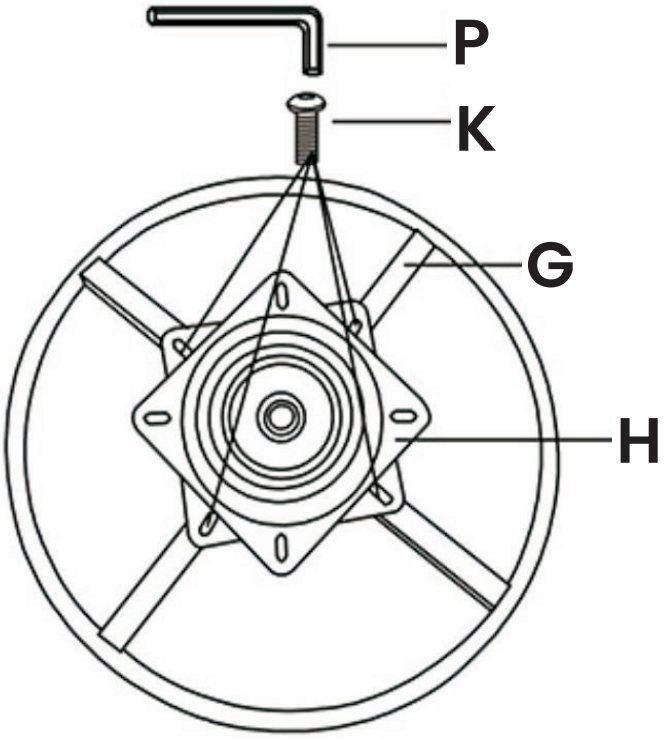

Gx1	
Hx1	
Px1	
Kx4 M6x16mm	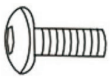

Step 3

Align front panel (C) with the mounting holes on armrests (B), then secure it using screws (M6x16mm) (K).

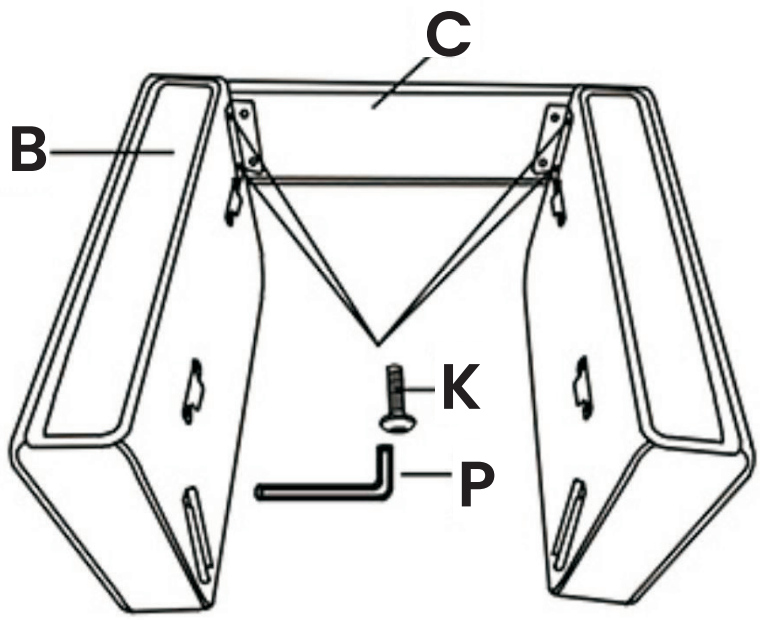

Bx2	
Cx1	
Px1	
Kx4 M6x16mm	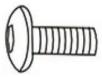

Step 4

Attach Metal Bracket (I) to the underside of armrests (B) using screws (M8x20mm) (N).

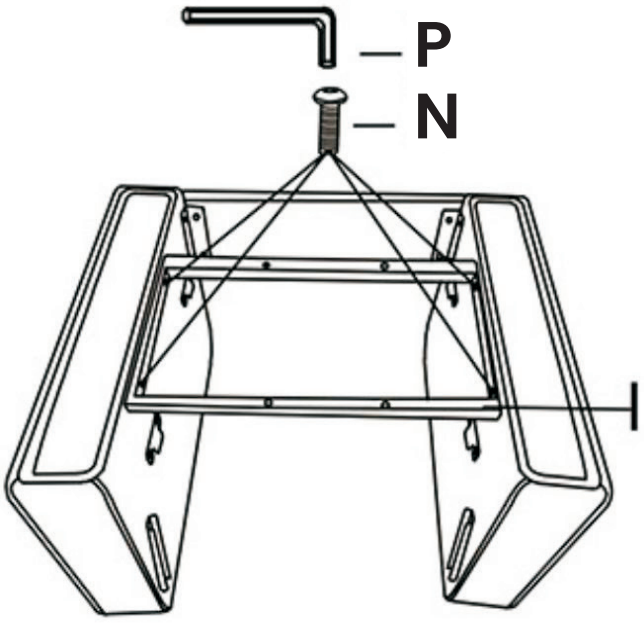

Ix1	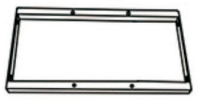
Px1	
Nx4 M8x20mm	

Step 5

Attach connecting rod (J) to Metal Bracket (I) using screws (M6x70mm) (M) and washers (O).

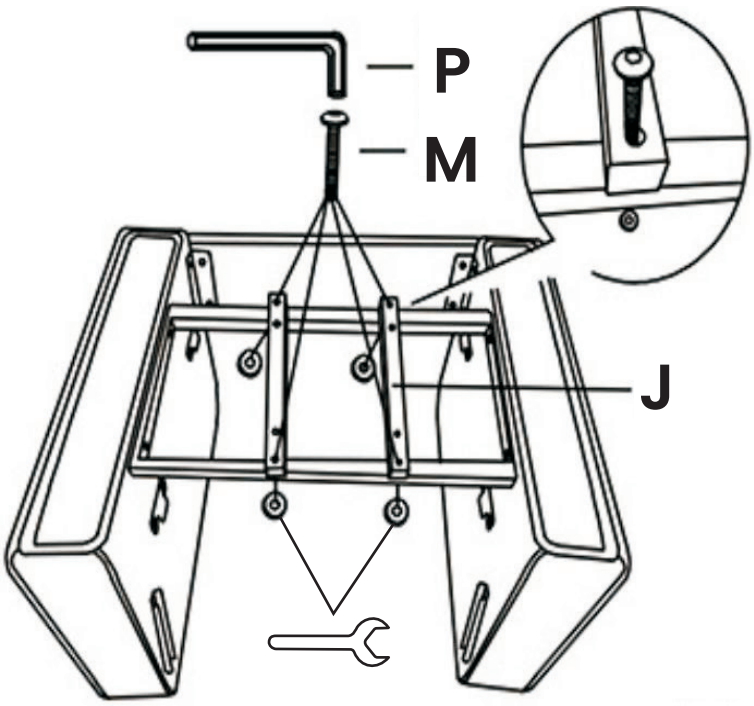

Jx2

Ox4

Px1

Mx4
M6x70mm

Rx1

Step 6

Attach the base assembly completed in Step 2 to connecting rod (J) using screws (M6x70mm) (M) and washers (O).

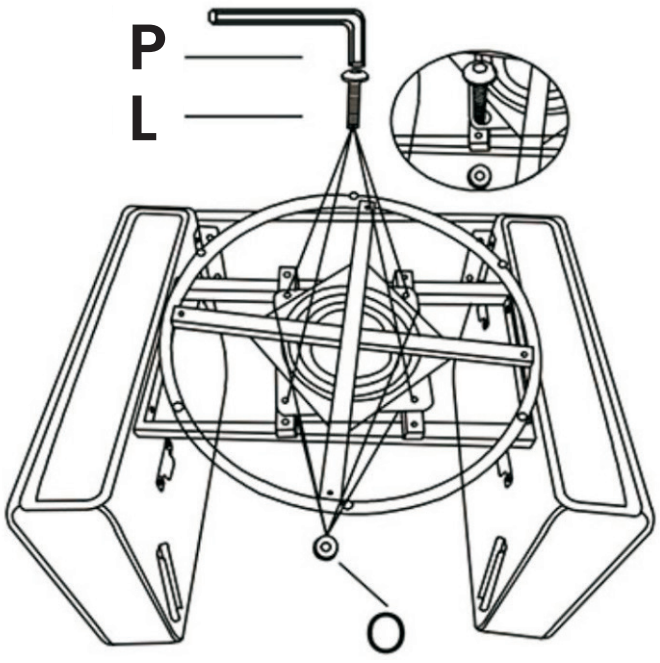

Ox4

Px1

Lx4
M6x40mm

Step 7

Remove the bolts from the bottom panel (D) , then fix accesssory (Q) in place using the bolts you just removed

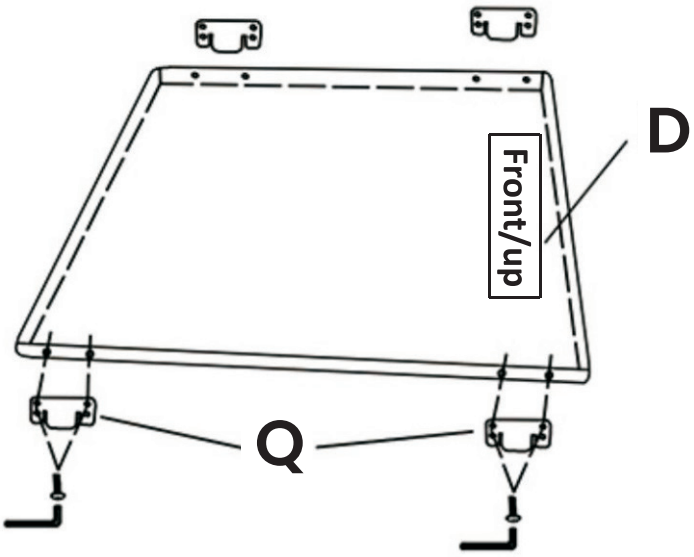

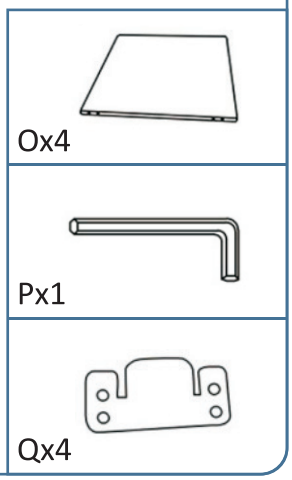

Step 8

Turn over the assembled seat, then align bottom panel (D) with armrests (B). Insert accessory (Q) installed in Step 7 fully into the slots on armrests (B).

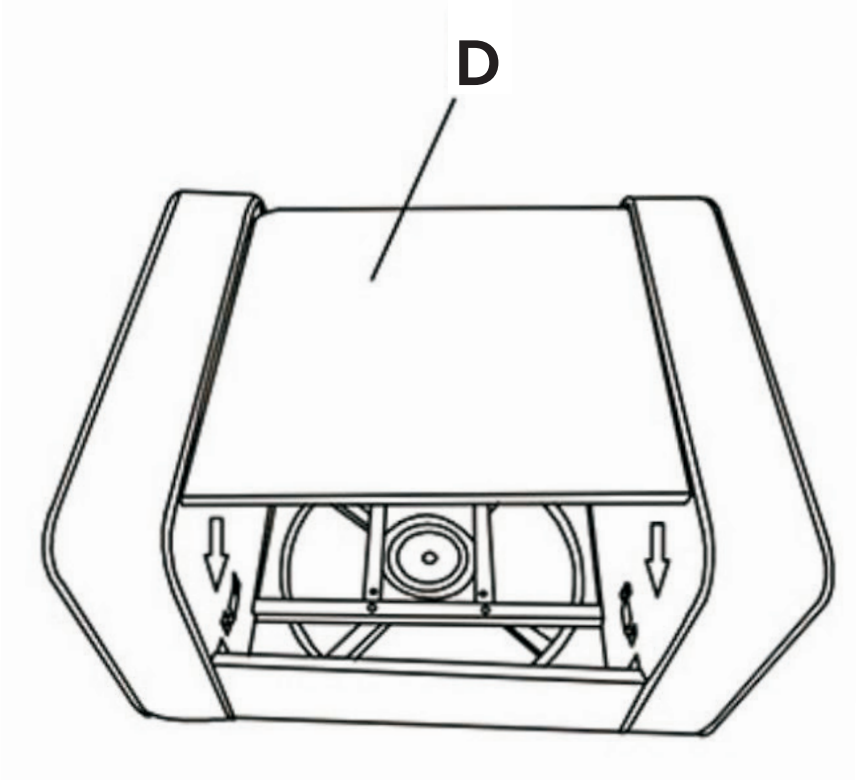

Step 9

Slide Seat Backrest Panel (A) downward along the grooves on armrests (B) until fully inserted.

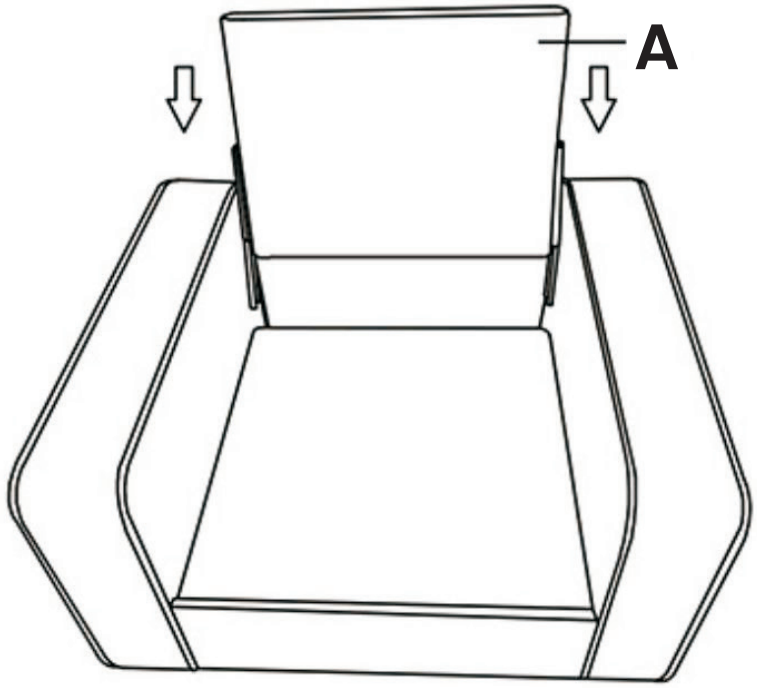

Step 10

Place the fully expanded seat cushion (F).

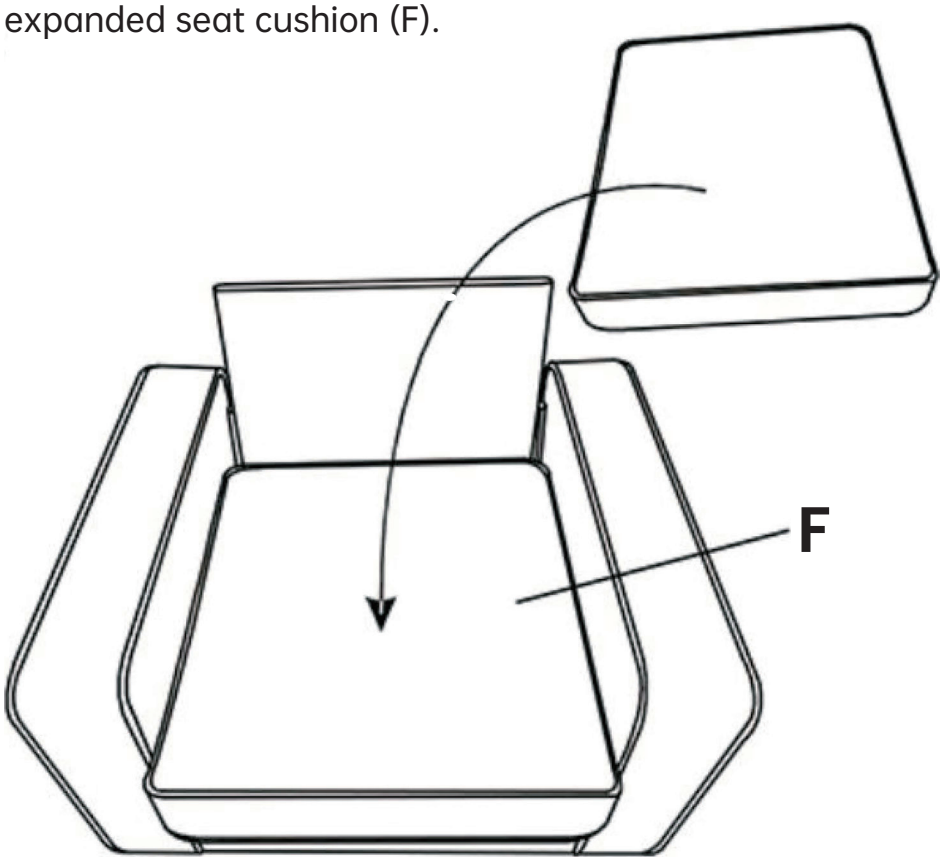

Step 11

Place the fully expanded back cushion (E).

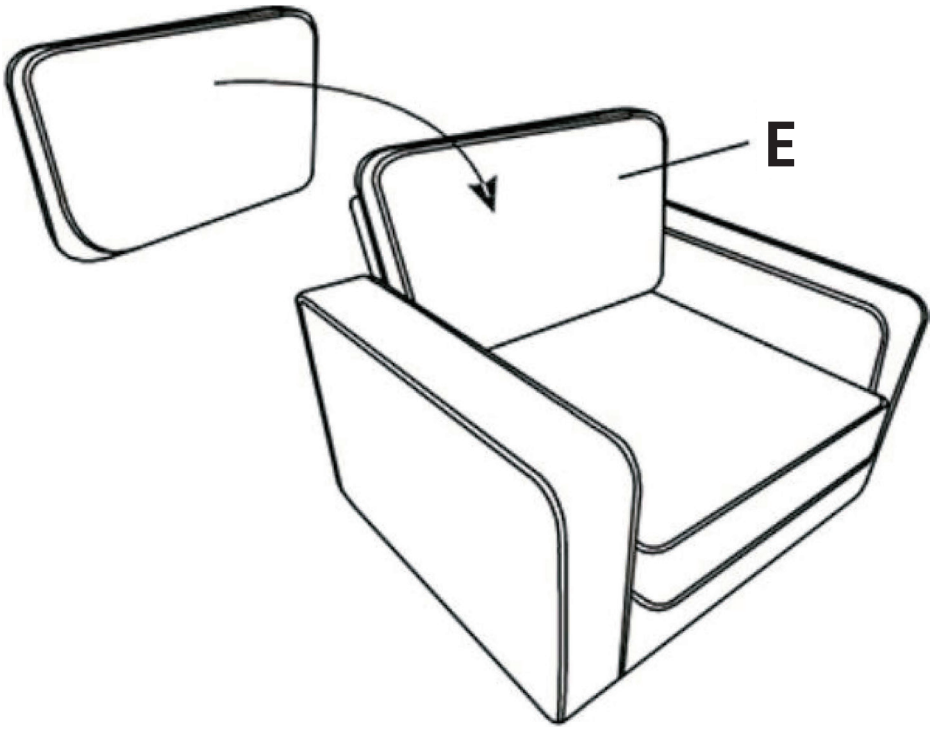

Safety Information

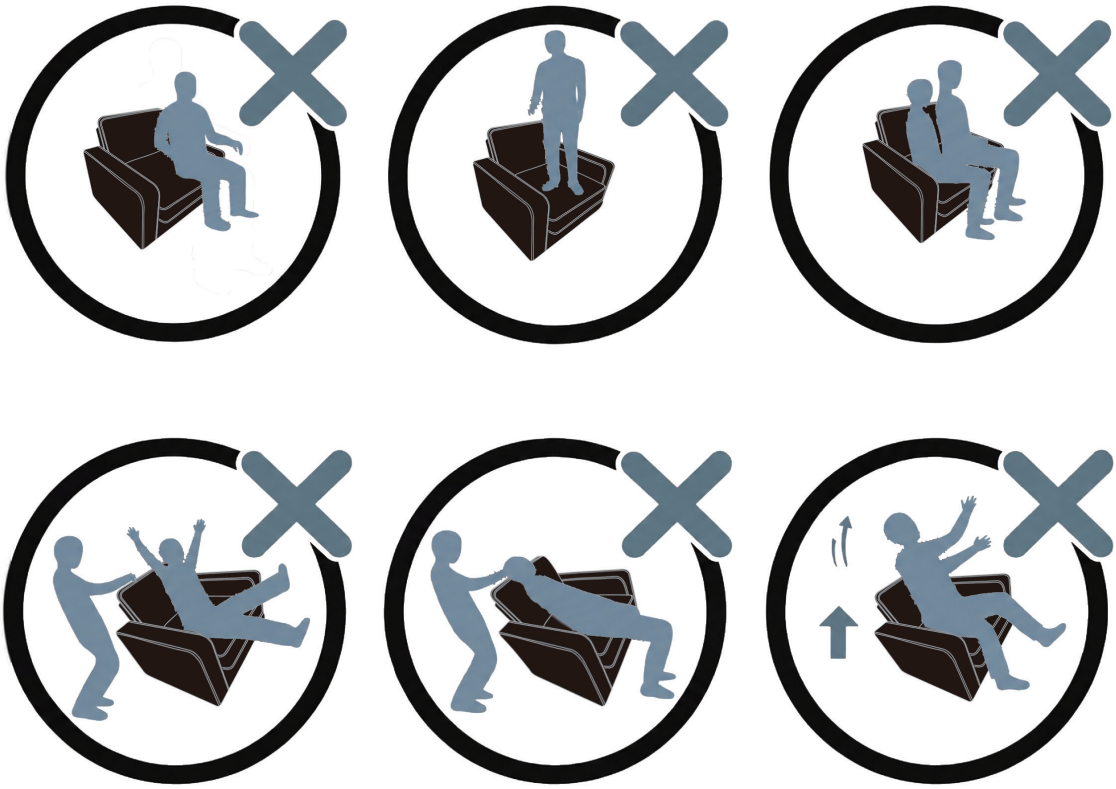

INSTRUCTION MANUAL

Model: HH506

cs@cubewalk.com

+1(573)763-2733