TV Stand

Assembly Instructions - Please keep for future reference

⚠ NOTE:

Comes with TWO PACKAGES with TWO TRACKINGS,may NOT be delivered at the same time.

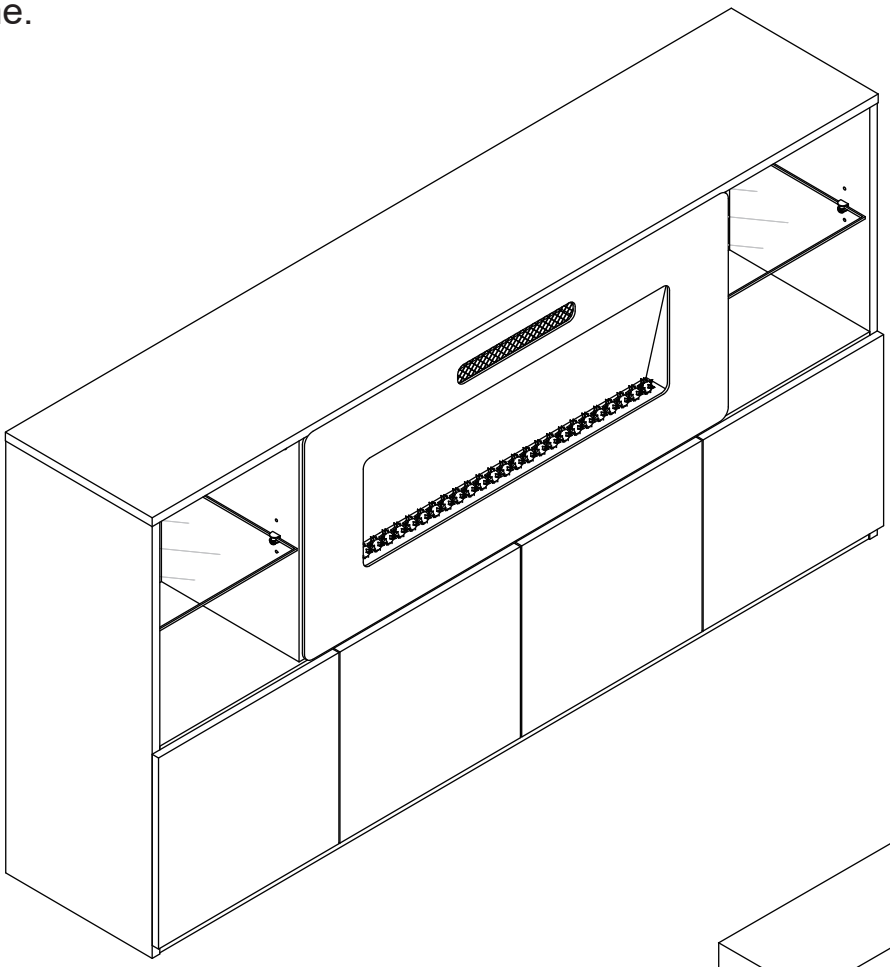

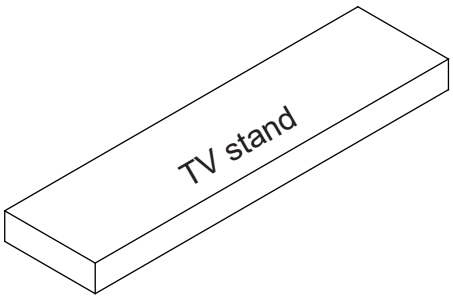

Carton 1 of 2

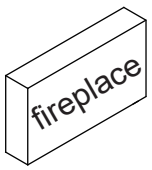

Carton 2 of 2

Dimensions

Width - 68.1inch
Depth - 14.4inch
Height - 35.3inch

Any question please feel free to contact us:
support@amer-life.com TEL:(901) 347-2181
We will provide further assistance within 24 hours.

Important – Please read these instructions fully before starting assembly

Issue 1 -26/03/2025

Safety and Care Advice

Important – Please read these instructions fully before starting assembly

• Check you have all the components and tools listed on the following pages.

• Remove all fittings from the plastic bags and separate them into their groups.

• Keep children and animals away from the work area, small parts could choke if swallowed.

• Make sure you have enough space to layout the parts before starting.

• During assembly do not stand or put weight on the product, this could cause damage.

• Assemble the item as close to its final position (in the same room) as possible.

• Assemble on a soft level surface to avoid damaging the unit or your floor.

• Parts of the assembly will be easier with 2 people.

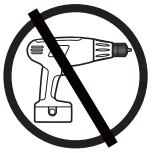

• To reduce the likelihood of damaging your product please ensure that your power drill is set on a low torque setting.

Care and maintenance

• Only clean using a damp cloth and mild detergent, do no use bleach or abrasive cleaners.

• From time to time check that there are no loose screws on this unit.

• This product should not be discarded with household waste. Take to your local authority waste disposal centre.

Handy Hints

• Assemble all parts and bolts loosely during assembly, only once the product is complete should you fully tighten the bolts

• Regularly check and ensure that all bolts and fittings are tightend properly.

WARNING
In order to help prevent overturning – please follow these instructions

To help prevent product toppling over please follow the below steps:-

Use the anti tip strap or wall fixing method provided (if applicable)
Do not allow children to climb or hang on the furniture
Do not open more than one drawer at a time
Do not place heavy items in the top drawers
Do not place heavy items on top of the furniture, unless the furniture has been designed for this purpose

Please note that only the anti tip strap is provided.
You will need to provide wall plugs and screws applicable for your wall type

Components - Fittings

Please check you have all the fittings listed below

Note: The quantities below are the correct amount to complete the assembly. In some cases more fittings may be supplied than are required.

A  8*30mm Wooden Dowel x 37	**B**  7*39mm Cam Bolt x 24	**C**  Cam Lock x 24
D  5*40mm Screw x 10	**E**  Protective Foot x 7	**F**  3.5*14mm Screw x 40
G  3*16mm Back Panel Stiffener x 16	**H**  Glass Shelf Clamp x 8	**I** 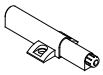 Push-open Latch x 4
J 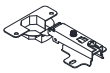 Hinge x 8	**K** 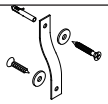 Wall Fixing Pack x 2	**L**  4*14mm Screw x 8
M  Adjustable Foot x 1		

Tools required



Phillips screwdriver
(medium & large)

Ruler - Use this ruler to help correctly identify the screws

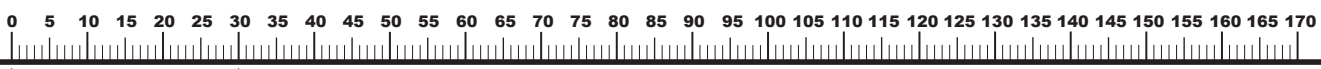

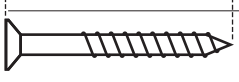

The screws length is measured from the head to the point (30mm screw shown).

Using Camlocks

Step 1

Connect the male camlock as directed in the assembly instructions using a screwdriver.

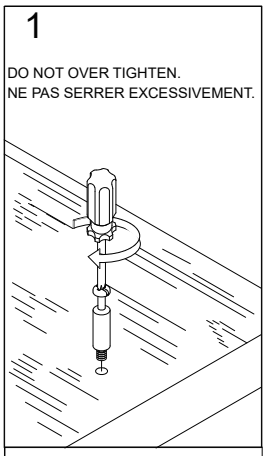

Step 2

Push the male camlock into the entry hole.

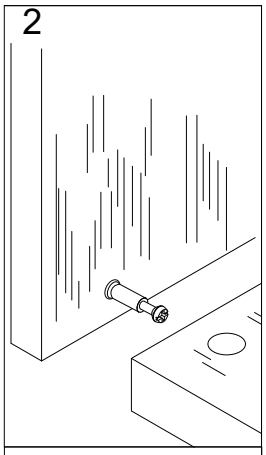

Step 3

Insert the female camlock as shown in the instructions.

Note: ensure that the arrow on the top of the camlock points towards the entry hole for the male camlock.

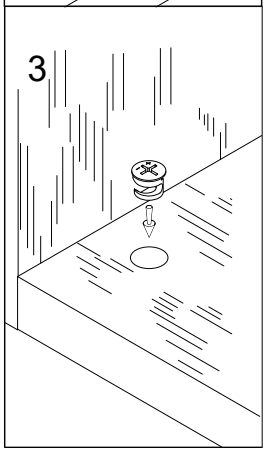

Step 4

Turn the female camlock clockwise with a screwdriver.

You should feel a click when the camlock is locked in place.

The joint is now secure.

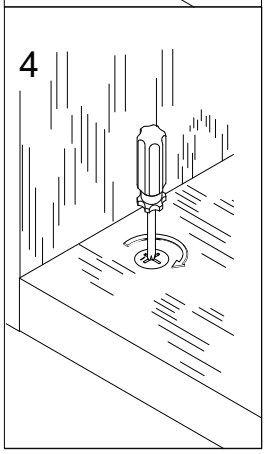

Components - Panels

Please check you have all the panels listed below

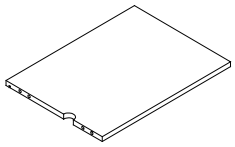

1 (46 x 34.2 x 1.5cm) x 1

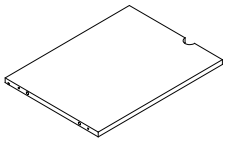

2 (46 x 34.2 x 1.5cm) x 1

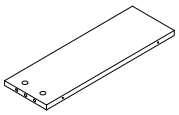

3 (46 x 15 x 1.5cm) x 1

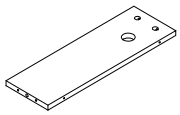

4 (46 x 15 x 1.5cm) x 1

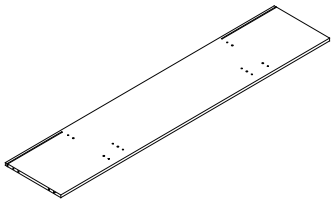

5 (169.8 x 34.8 x 1.5cm) x 1

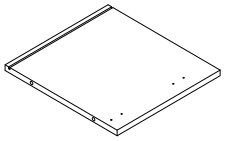

6 (34.7 x 31.9 x 1.5cm) x 1

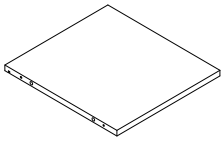

7 (34.7 x 31.9 x 1.5cm) x 1

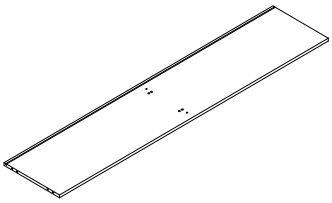

8 (169.8 x 34.8 x 1.5cm) x 1

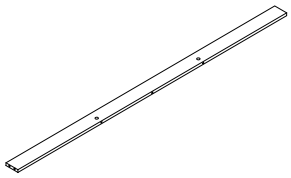

9 (169.8 x 7.5 x 1.5cm) x 1

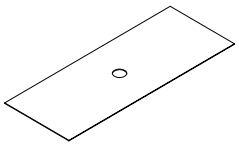

10 (84.3 x 32.9 x 0.25cm) x 2

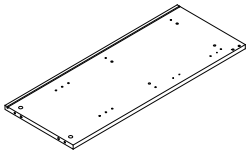

11 (88.4 x 34.9 x 1.5cm) x 1

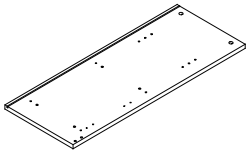

12 (88.4 x 34.9 x 1.5cm) x 1

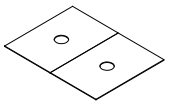

13 (34.8 x 47 x 0.25cm) x 2

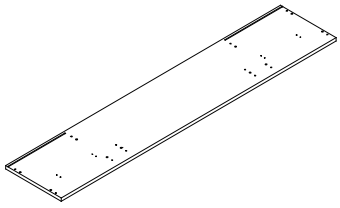

14 (173 x 35 x 1.5cm) x 1

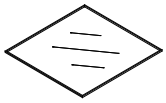

15 (32.9 x 32.9 x 0.6cm) x 2

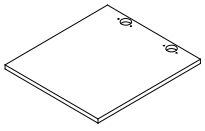

16 (43 x 39 x 1.5cm) x 4

Assembly Instructions

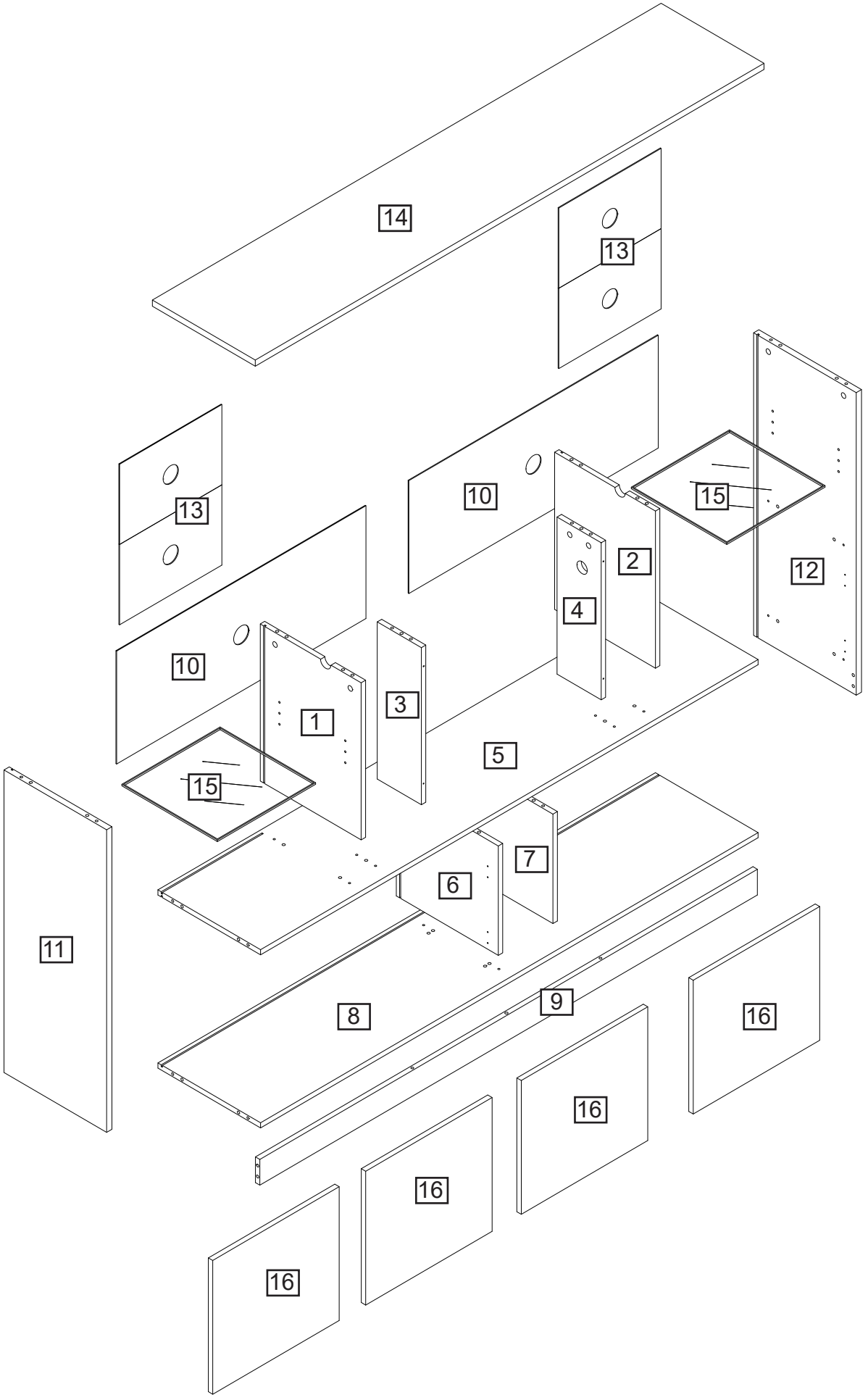

Assembly Instructions

Step 1

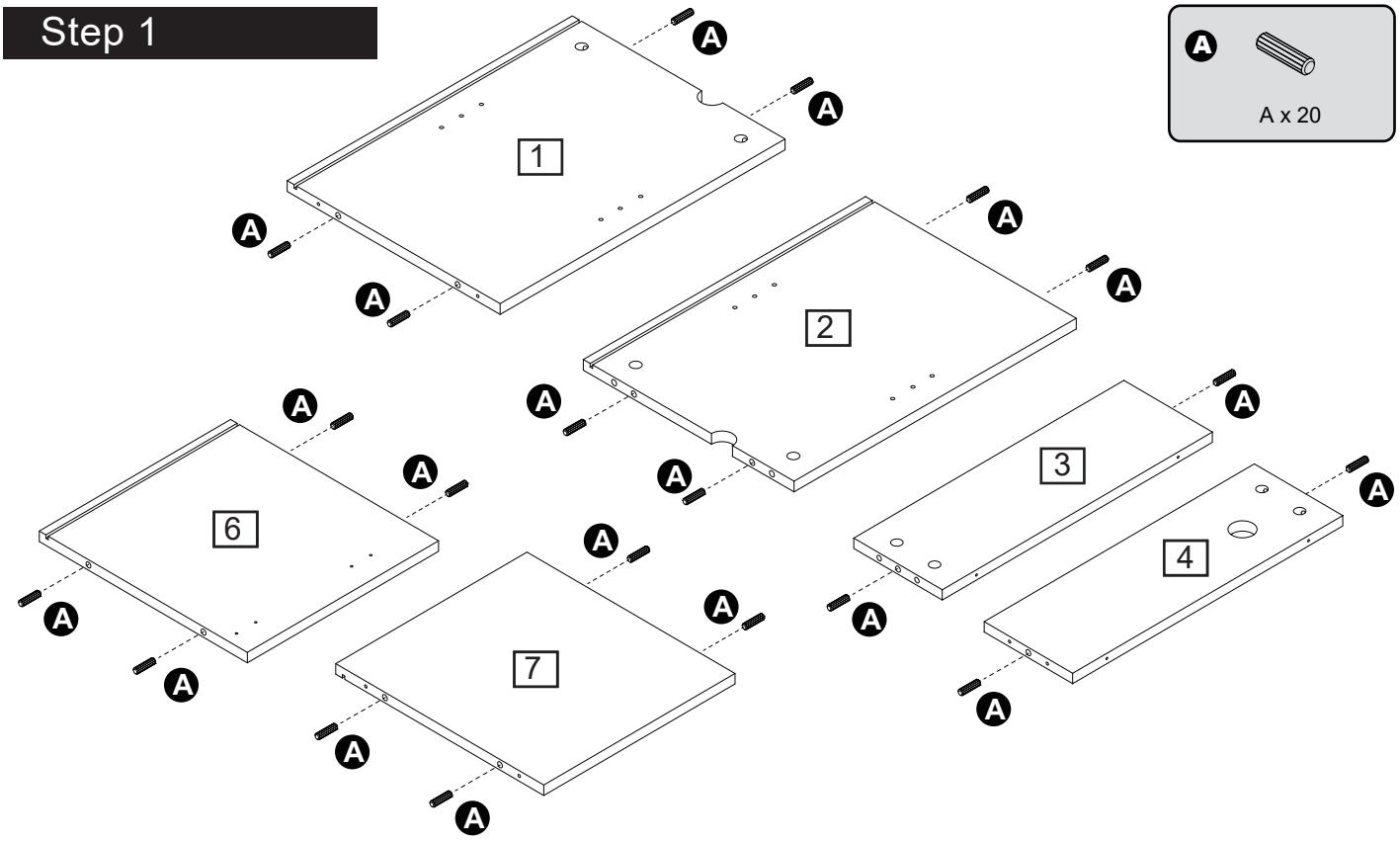

Insert wooden dowel (A) into part (1, 2, 3,4,6,7).

Step 2

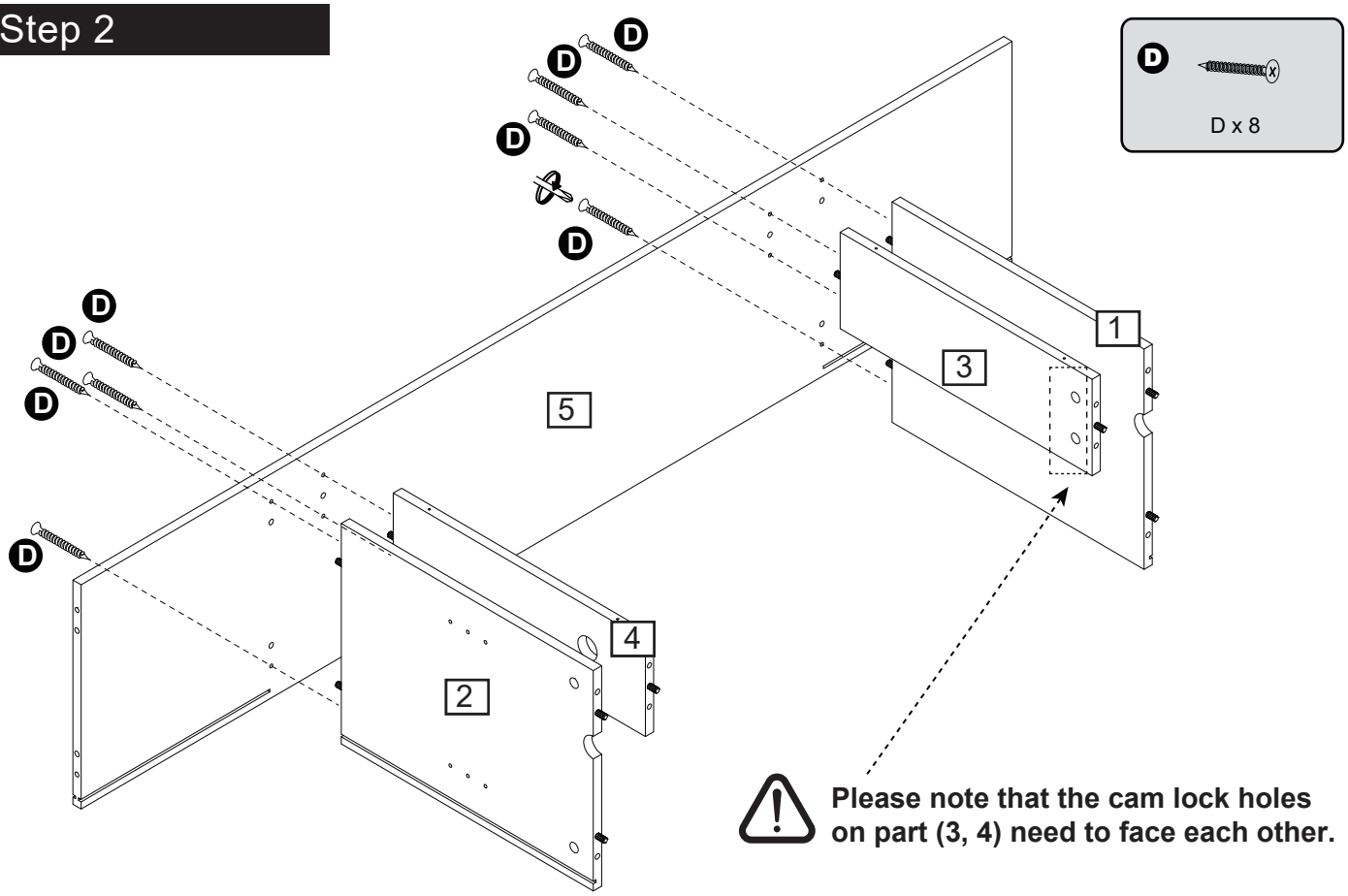

Please note that the cam lock holes on part (3, 4) need to face each other.

Attach part (1, 2,3,4) to part (5) using screw (D) with a screwdriver.

Assembly Instructions

Step 3

CAM-LOCK
Tighten until shoulder is flush with panel.Do not overtighten or undertighten(see example below)

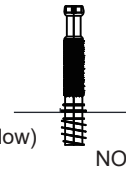

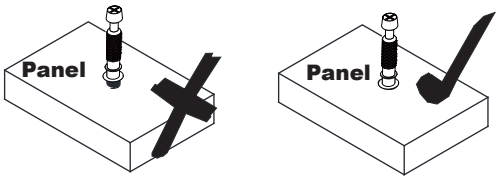

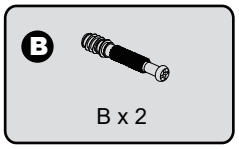

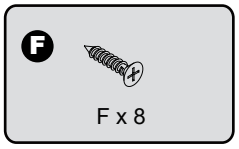

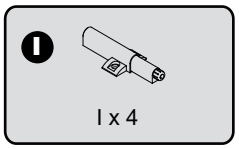

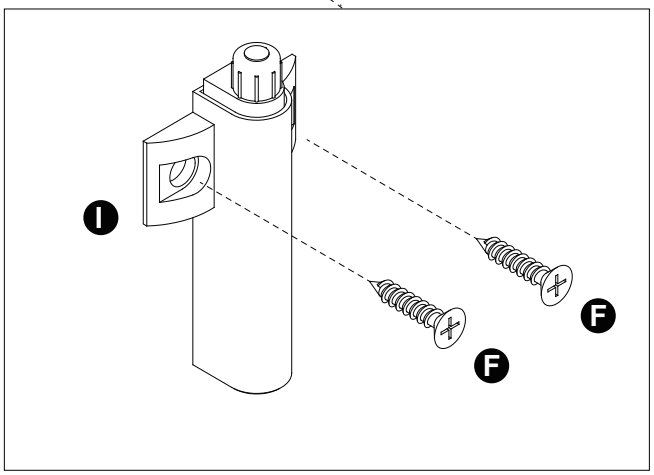

Note: **Pay attention to the direction of part(I).**

Attach cam bolt (B) to part (5) with a screwdriver, and use screw (F) to secure (I) to part (1) with a screwdriver.

Assembly Instructions

Step 4

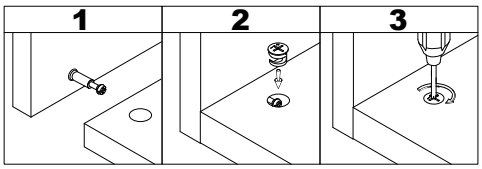

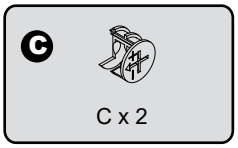

Attach part (6,7) to part (5), then insert and secure cam lock (C) to part (7) to lock it.

Step 5

CAM-LOCK
Tighten until shoulder is flush with panel.Do not overtighten or undertighten(see example below)

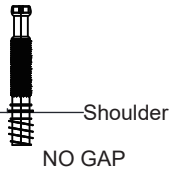

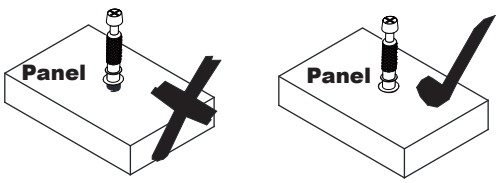

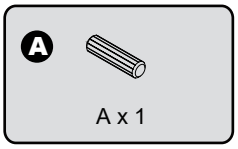

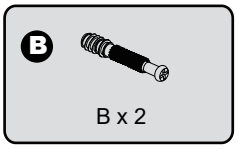

Insert wooden dowel (A) into part (8), and attach cam bolt (B) to part (8) with a screwdriver.

Assembly Instructions

Step 6

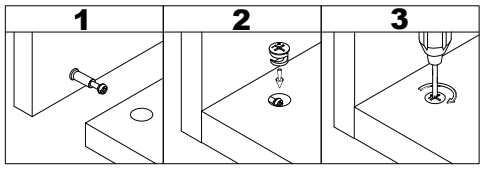



C x 2

Attach part (9) to part (8), then insert and secure cam lock (C) to part (9) to lock it.

Step 7

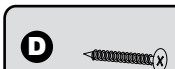

D x 2

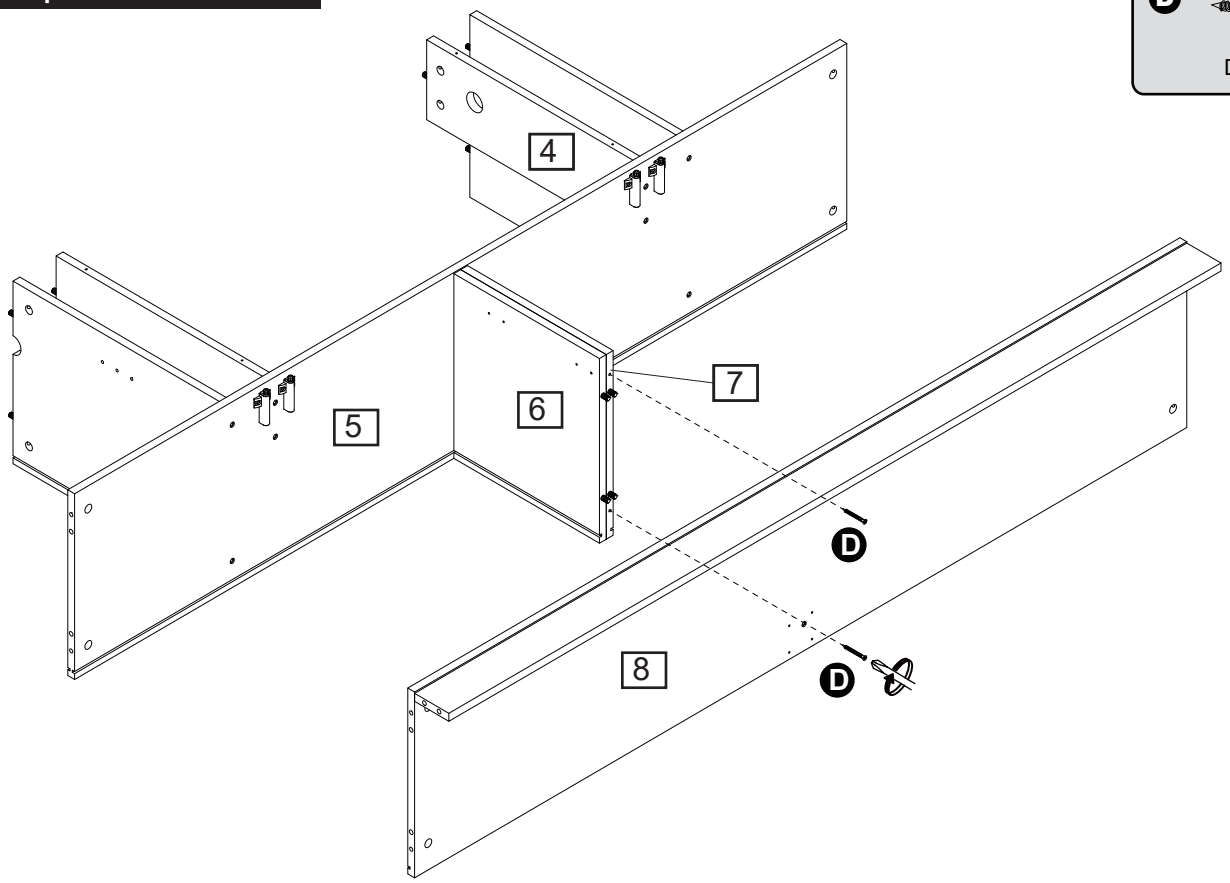

Attach part (8) to part (7) using screw (D) with a screwdriver.

Assembly Instructions

Step 8

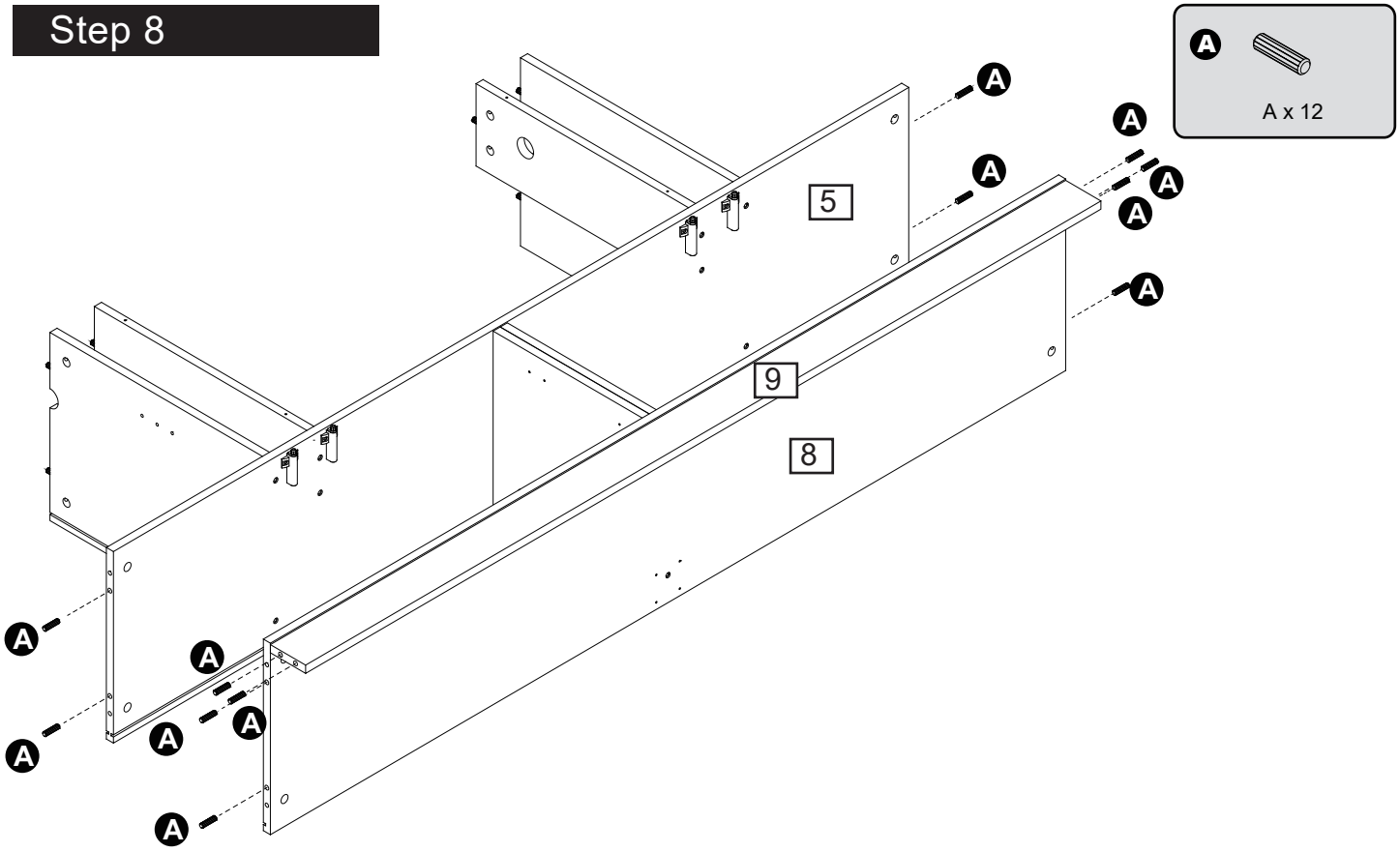

Insert wooden dowel (A) into part (5, 8, 9).

Step 9

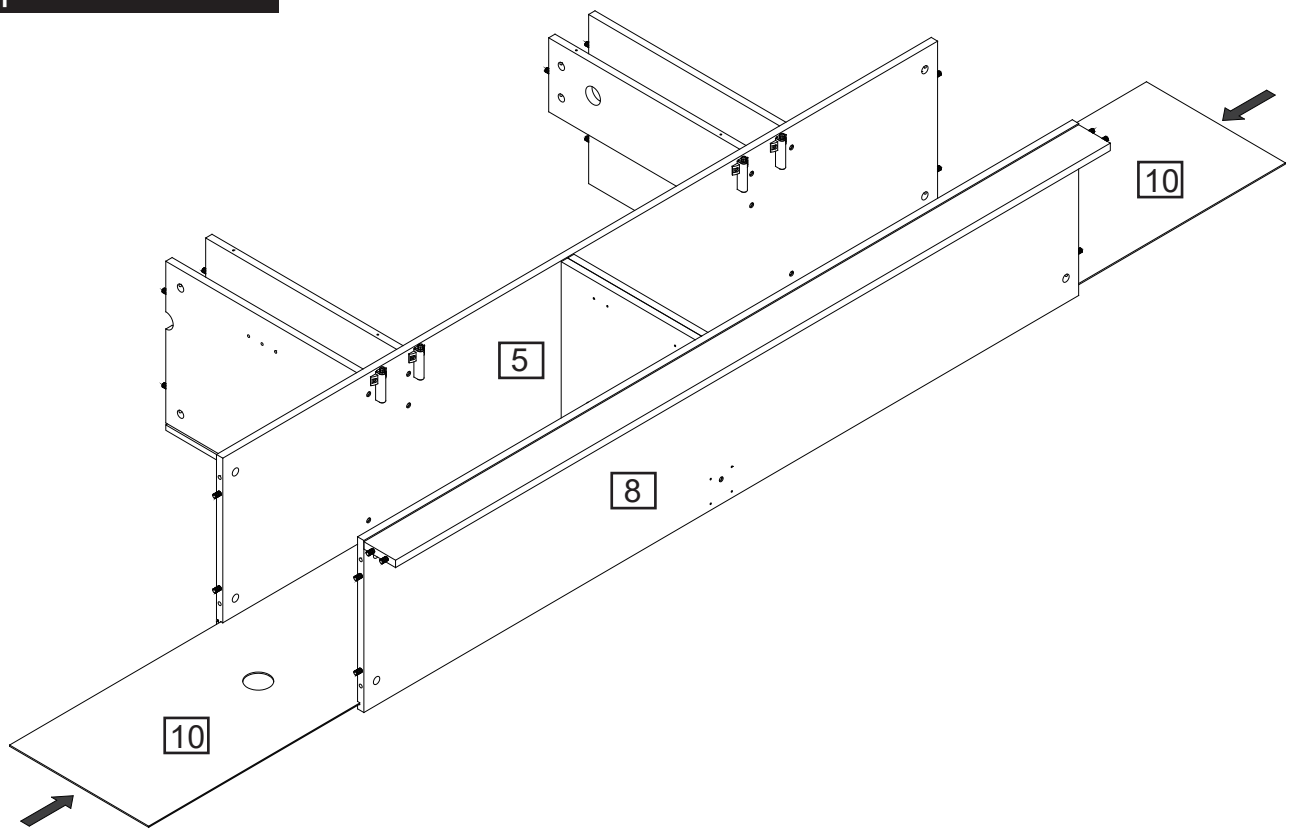

Slide 2 back panels (10) into grooves as per diagram.

Assembly Instructions

Step 10

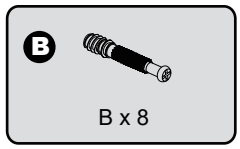

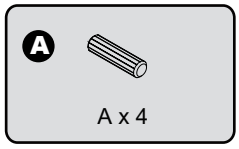

CAM-LOCK
Tighten until shoulder is flush with panel.Do not overtighten or undertighten(see example below)

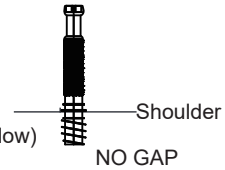

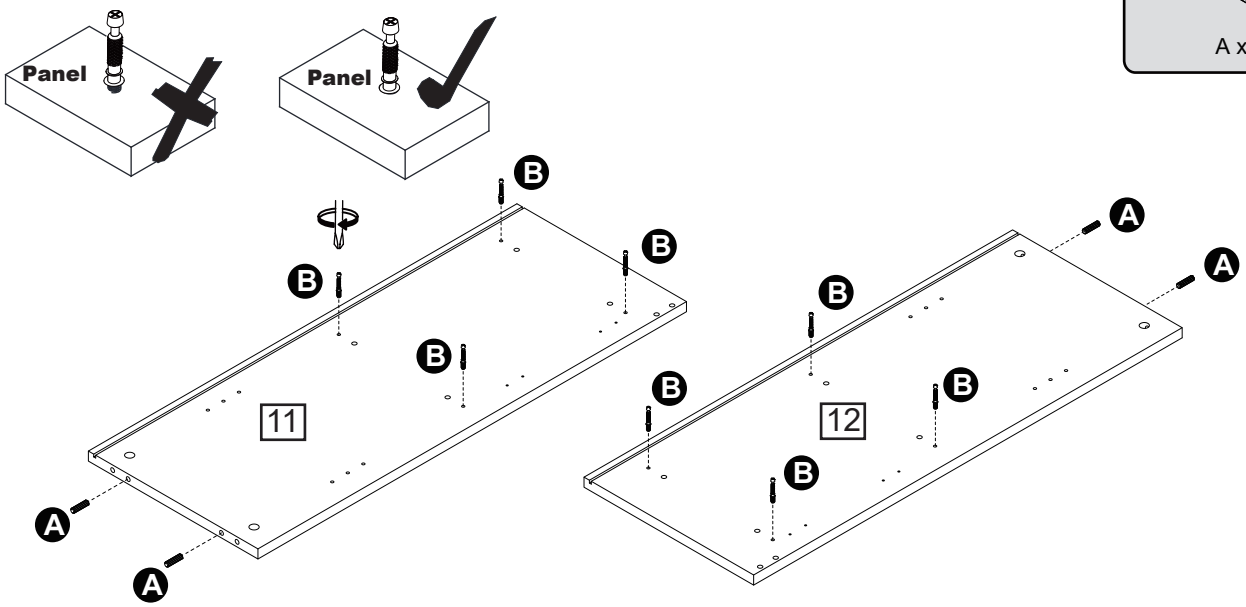

Insert wooden dowel (A) into part (11, 12), and attach cam bolt (B) to part (11, 12) with a screwdriver.

Step 11

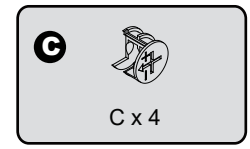

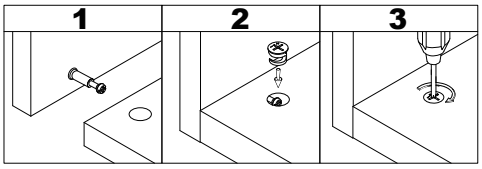

Attach part (12) to part (5, 8), then insert and secure cam lock (C) to part (5, 8).

Assembly Instructions

Step 12

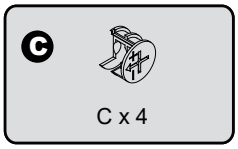

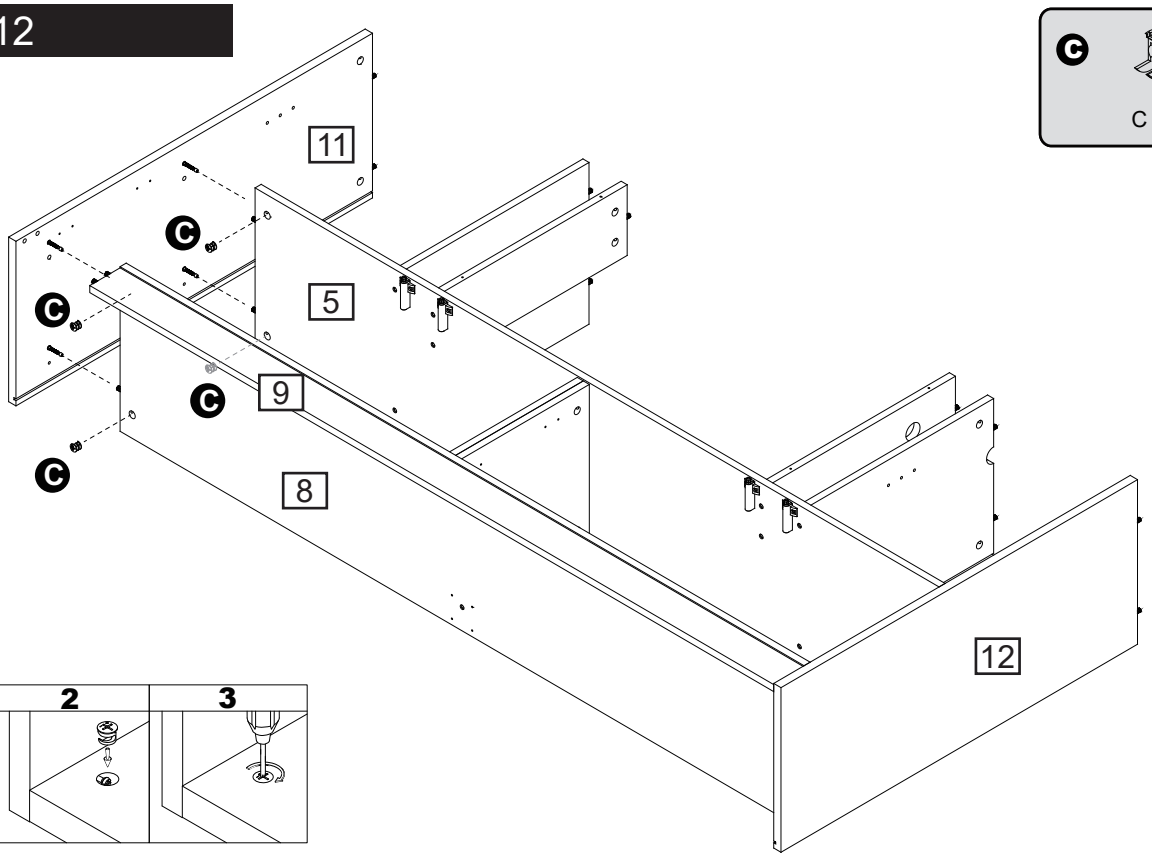

Attach part (11) to part (5, 8), then insert and secure cam lock (C) to part (5, 8).

Step 13

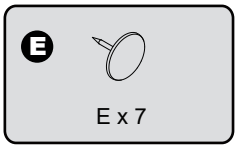

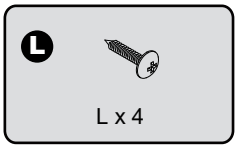

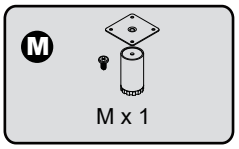

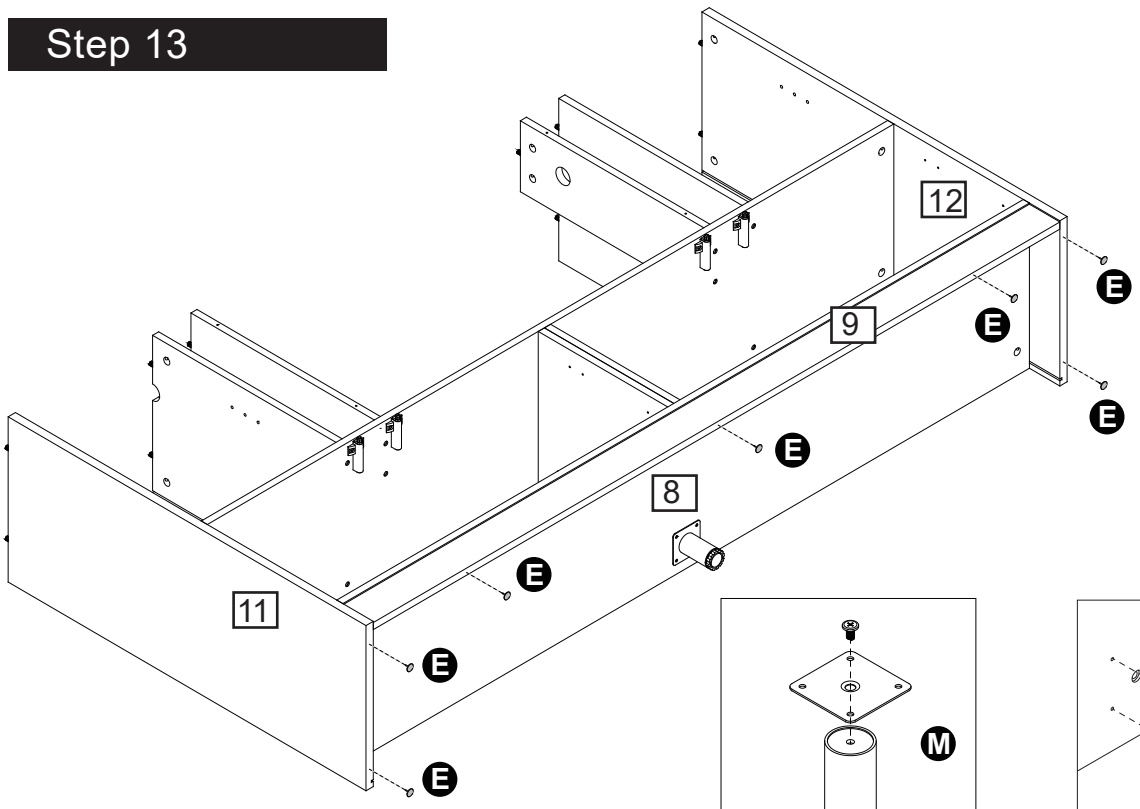

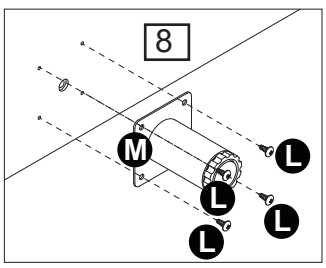

Insert protective foot (E) to part (9, 11, 12), and assemble the adjustable foot (M), then attach it to part (8) using screw (L).

Assembly Instructions

Step 14

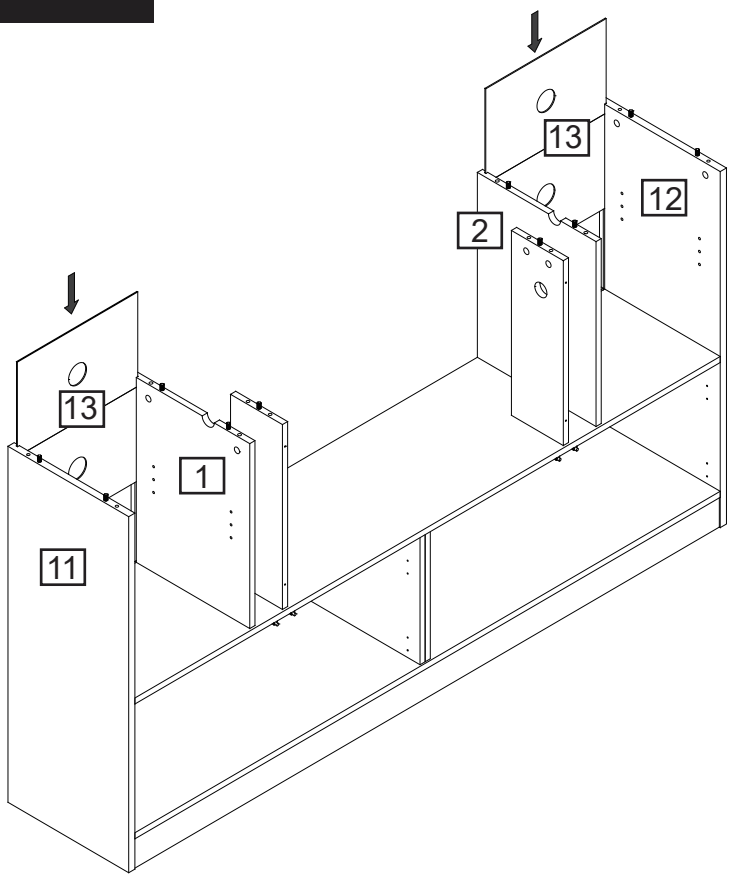

Slide back panel (13) into grooves.

Step 15

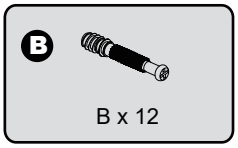

CAM-LOCK
Tighten until shoulder is flush with panel.Do not overtighten or undertighten(see example below)

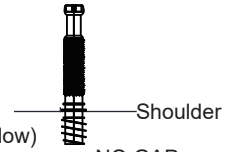

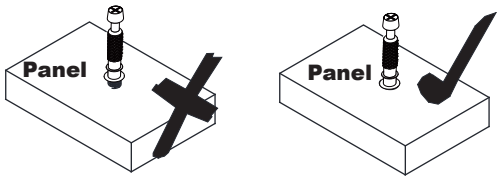

Attach cam bolt (B) to part (14) with a screwdriver.

Assembly Instructions

Step 16

Note: LED strip lights and brackets are in the BOX of Fireplace, not in the box of TV stand.

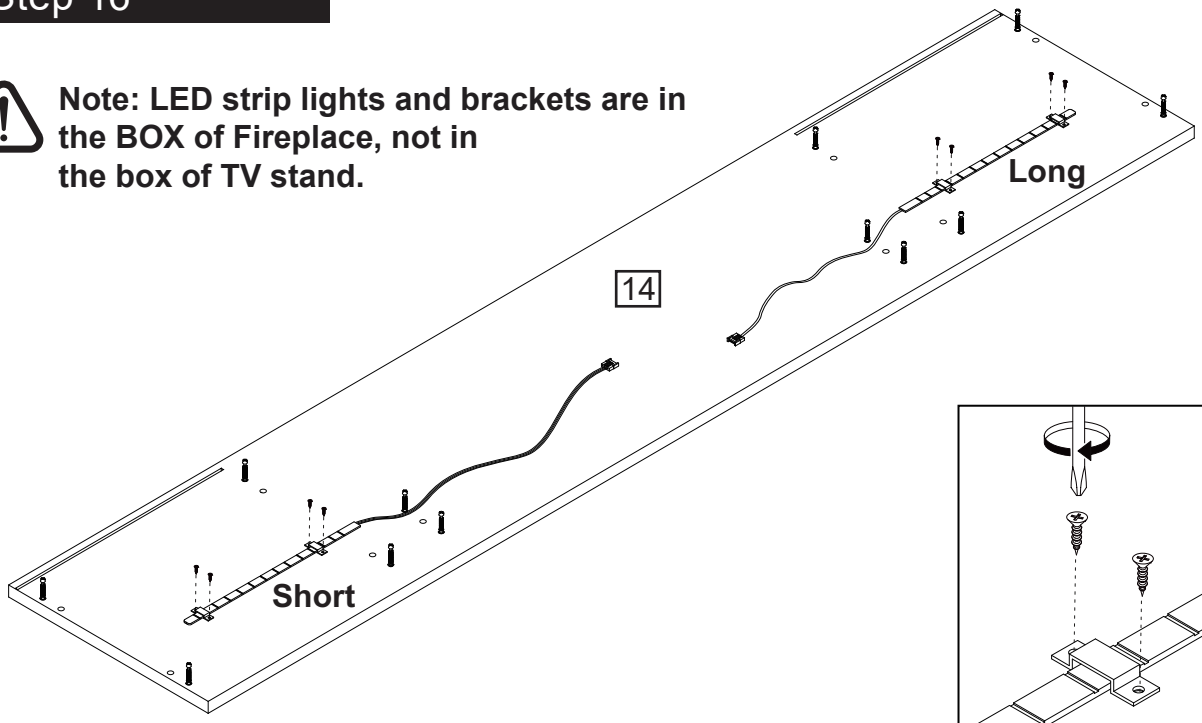

Attach LED strip light to part (14).

Step 17

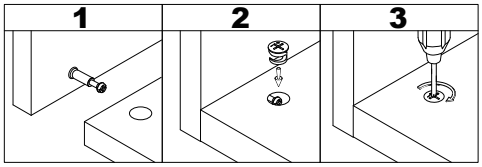



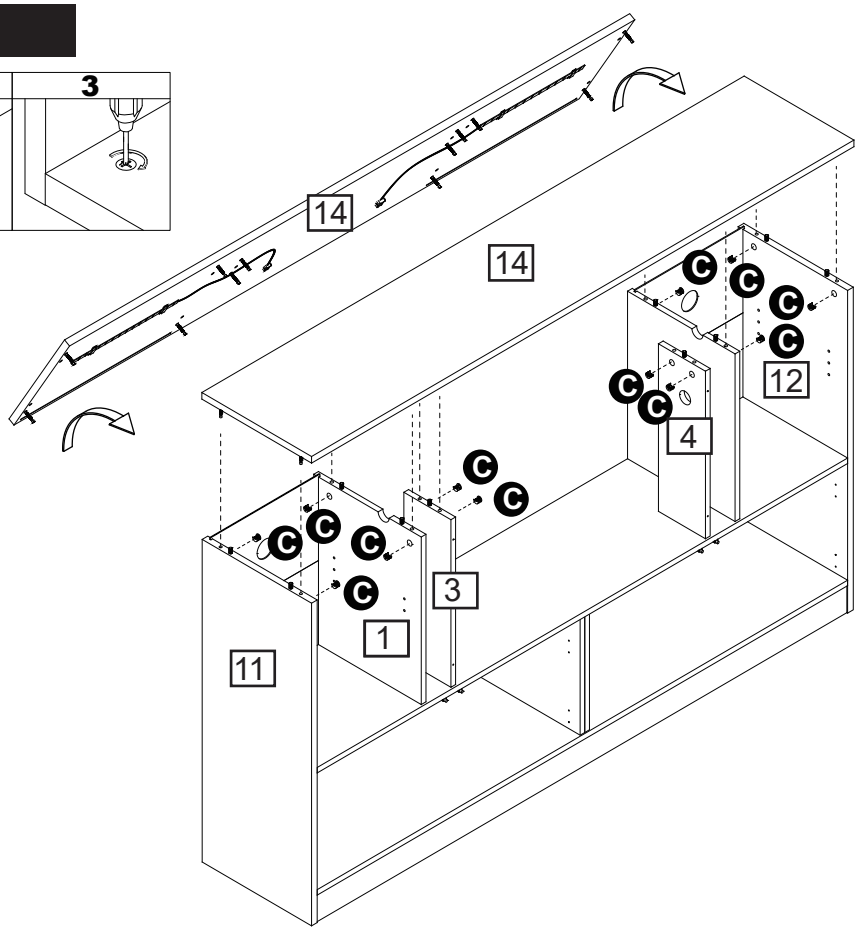

Attach part (14) to part (1, 2, 3, 4, 11, 12), then insert and secure cam lock (C) to part (1, 2, 3, 4, 11, 12) to lock it.

Assembly Instructions

Step 18

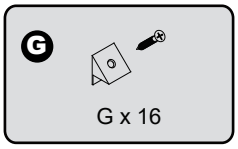

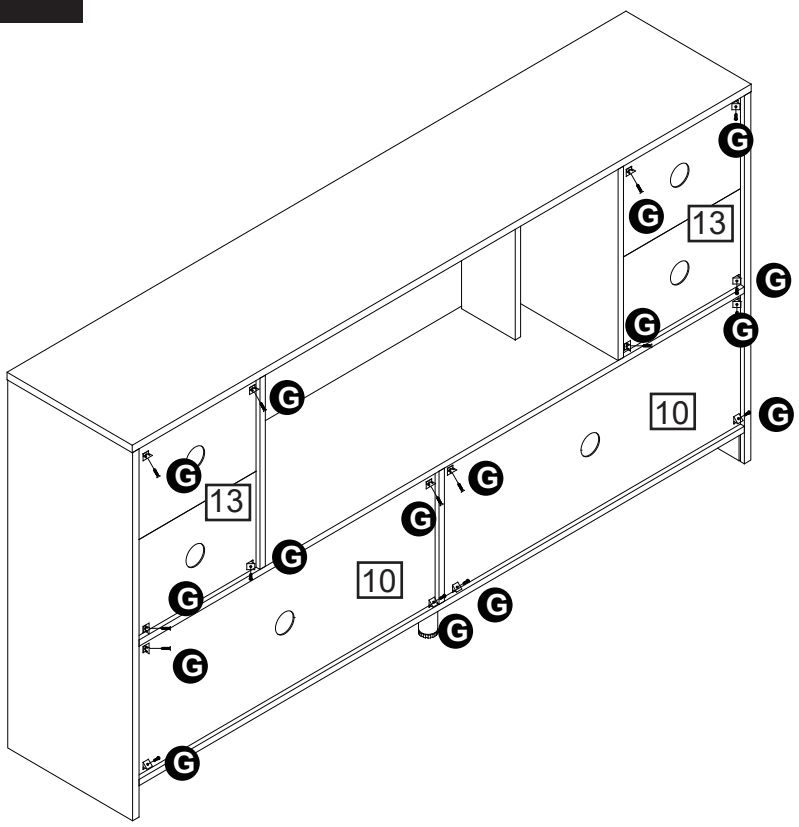

Attach plastic wedge (G) to back panels using screw (G) with a screwdriver.

Step 19

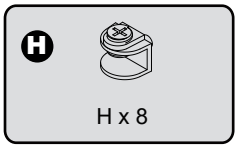

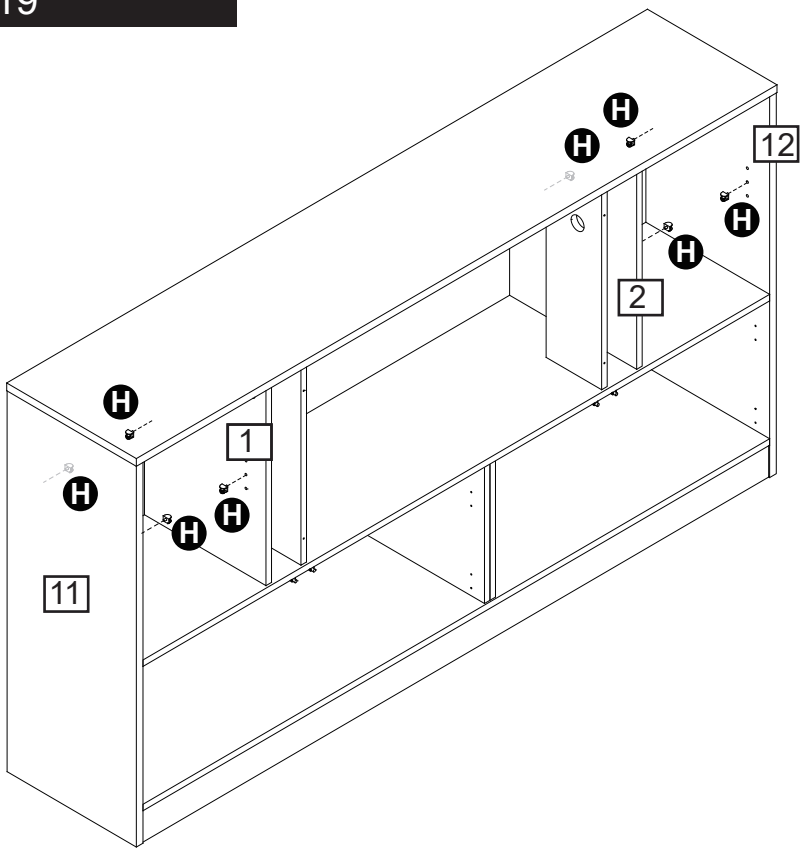

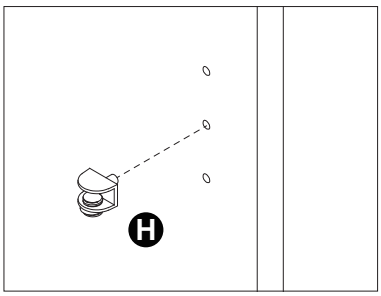

Attach glass shelf clamp (H) to part (1, 2, 11, 12).

Assembly Instructions

Step 20

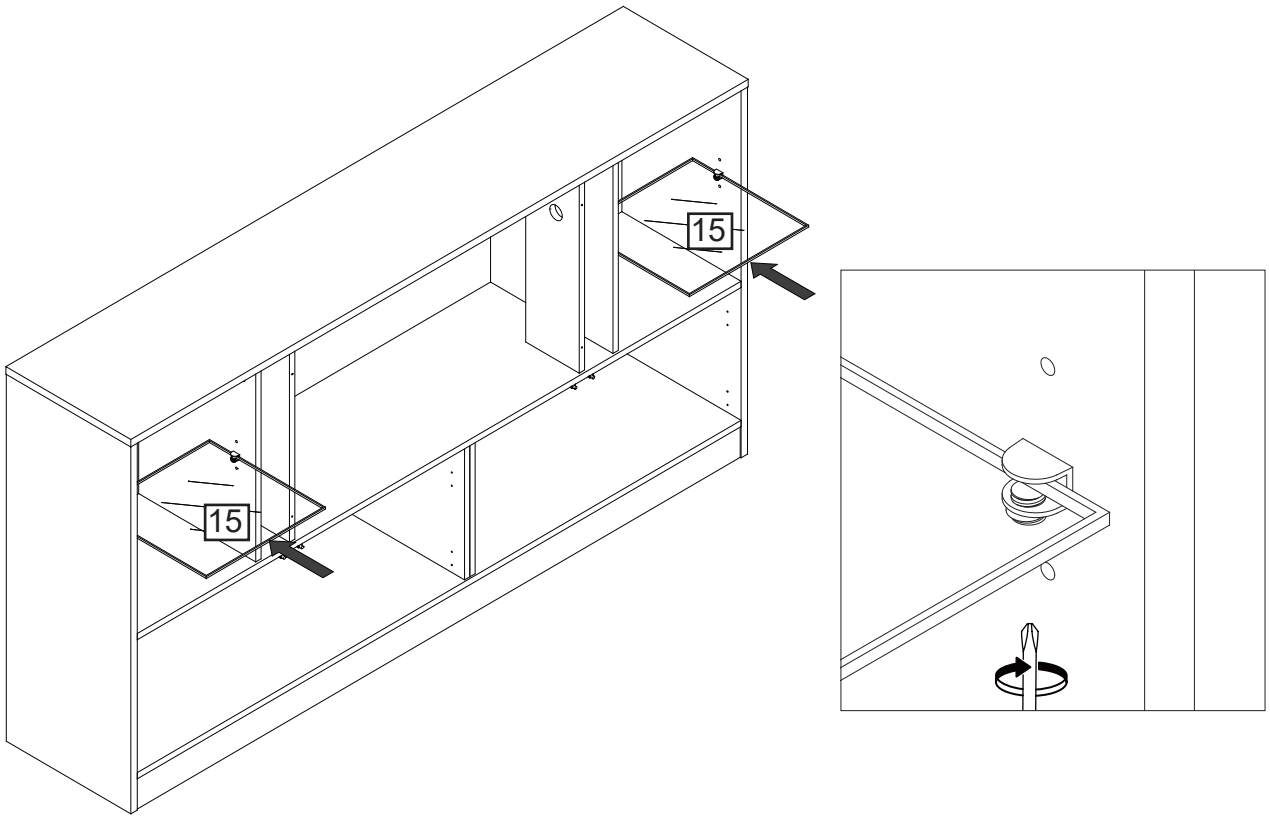

Slide part (15) through glass shelf clamp (H) and tighten the clamp.

Step 21

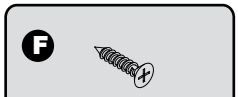

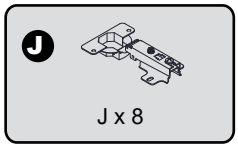

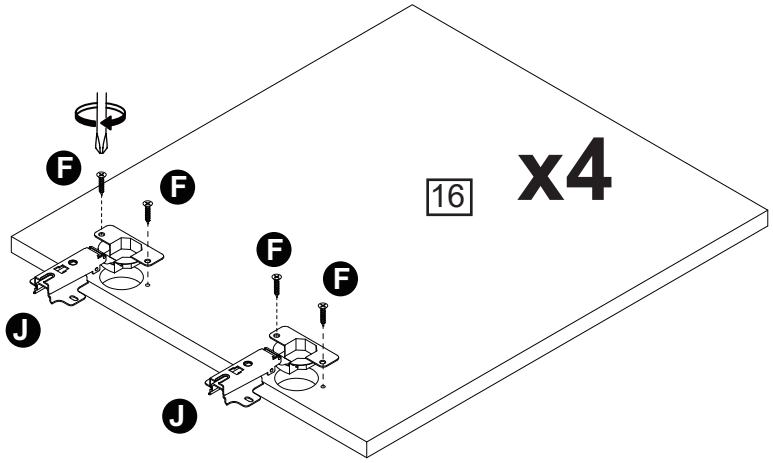

Use screw (F) to secure hinge (J) to part (16).

Assembly Instructions

Step 22

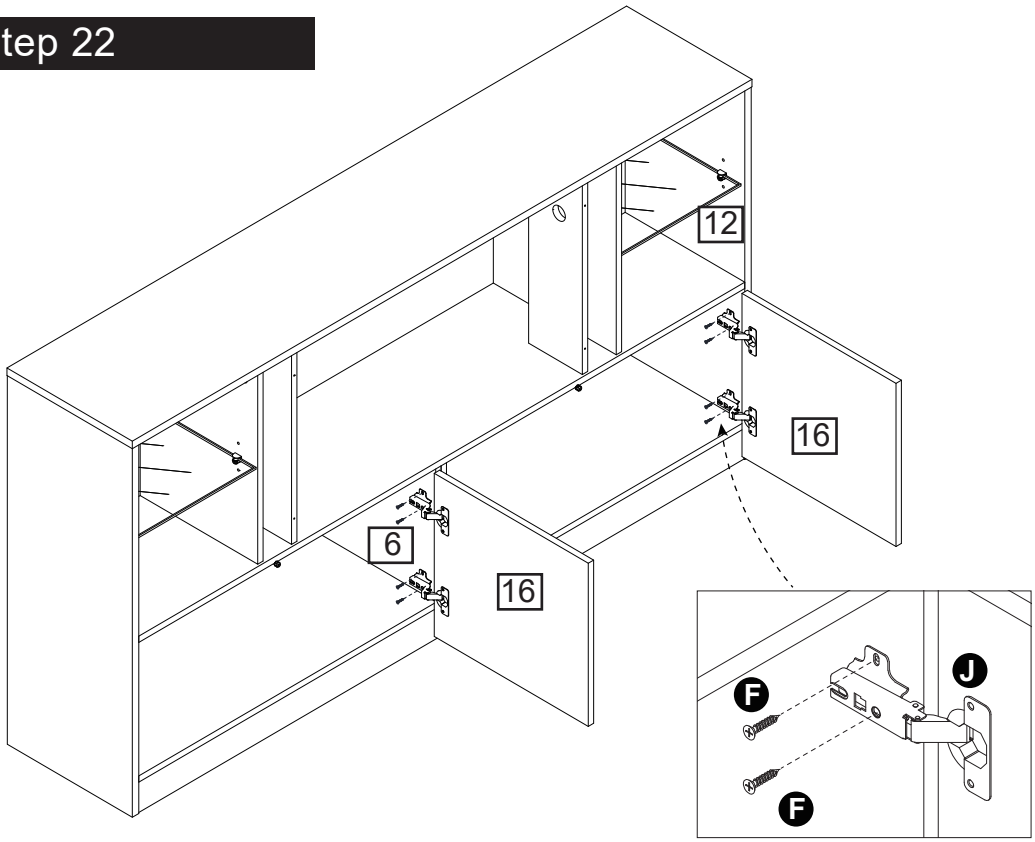

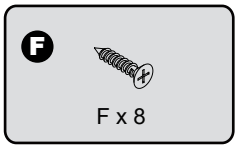

Use screw (F) to secure hinge (J) to part (6, 12).

Step 23

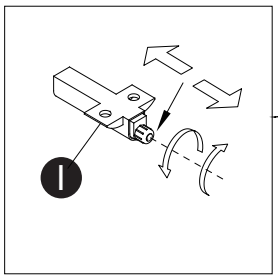

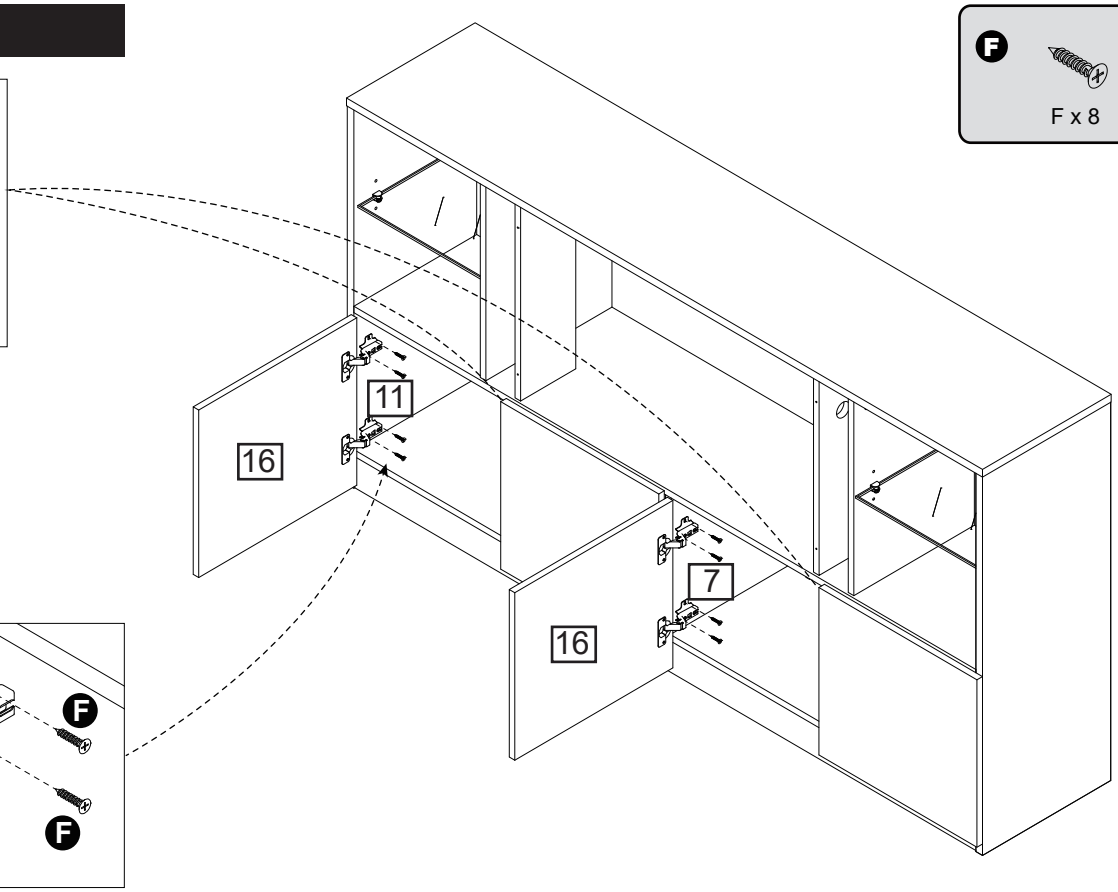

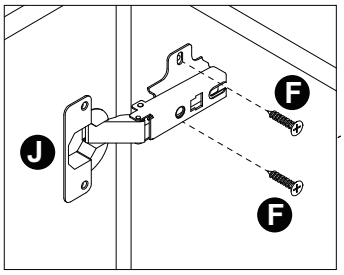

Use screw (F) to secure hinge (J) to part (7,11).
Adjust push-open latches so that the doors can close tightly.

Step 24

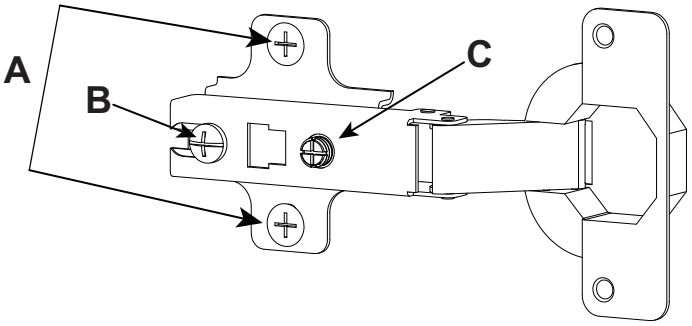

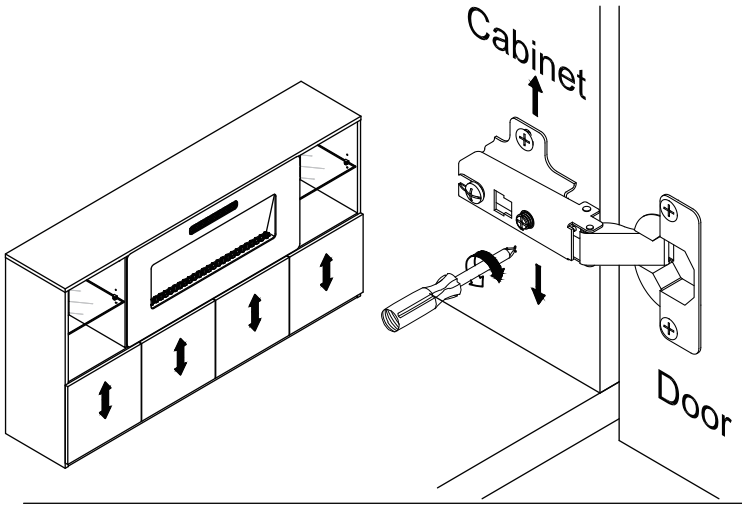

To adjust the vertical height.

Loosen the two screws "A" on both hinges. They are usually in slotted holes which allows you to adjust up or down by a few mm. Then tighten back up.

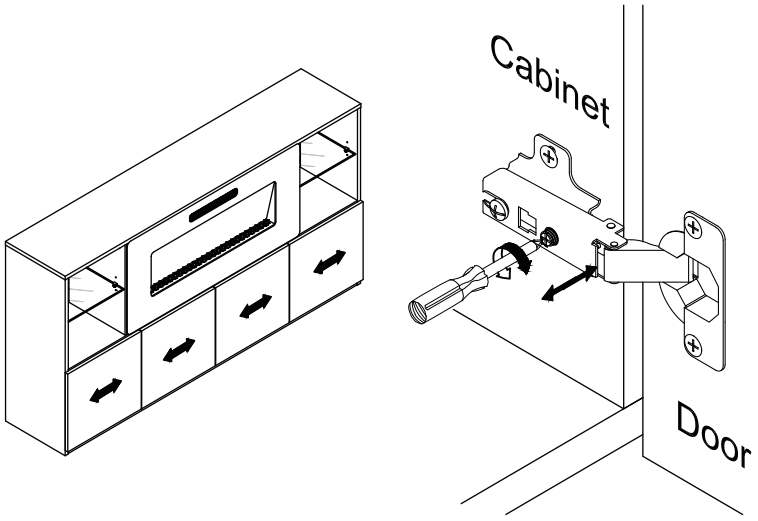

To adjust side ways.

Turning the screw "C" on BOTH hinges on each door.

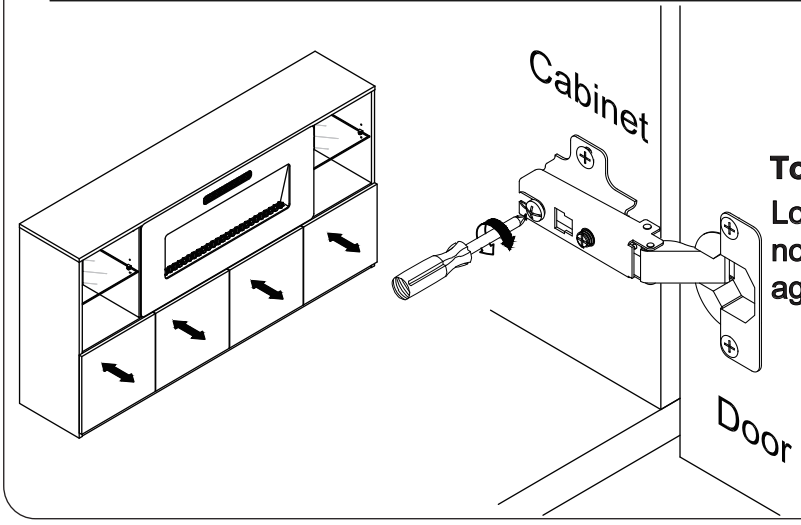

To adjust depth

Loosen screw "B" and adjust door,if the door can not be adjusted,please loosen screw "C" ,then try again.Tighten screw "B" and"C" .

Assembly Instructions

Step 25

Note: Fireplace is in the BOX of Fireplace, not in the box of TV stand.

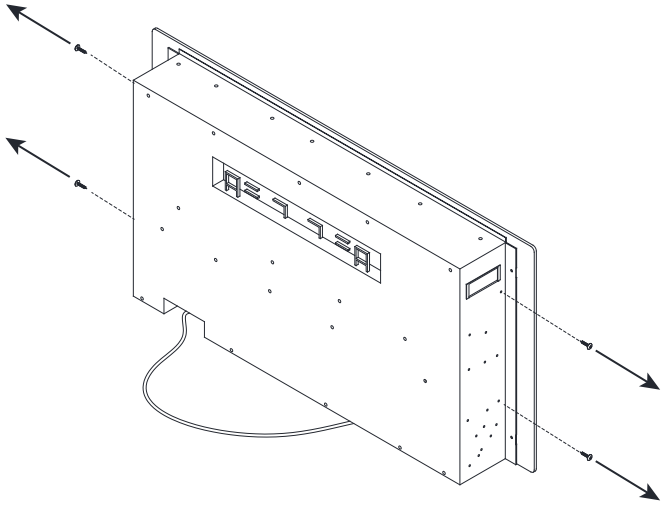

Before attaching fireplace to TV stand, unscrew four silver screws on the both sides of fireplace.

Step 26

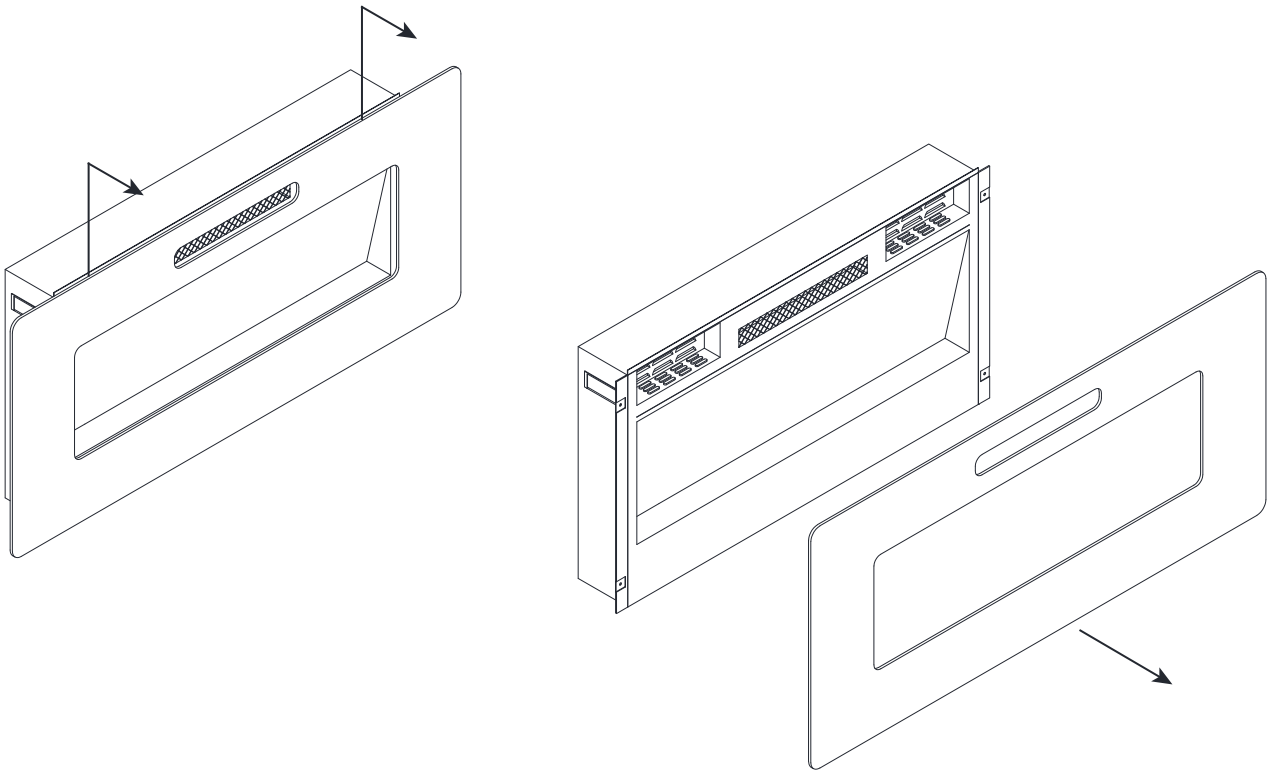

Carefully remove the front glass, and place it on a soft and clean surface.

Assembly Instructions

Step 27

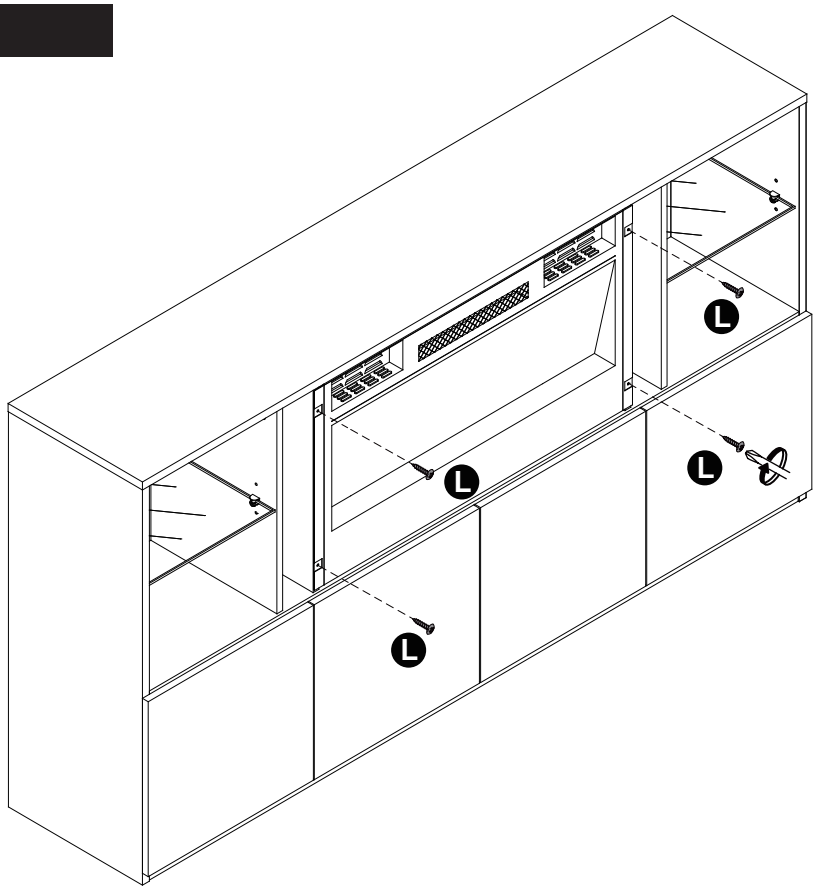

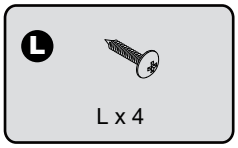

Insert the fireplace to the stand and secure it with screw (L).

Step 28

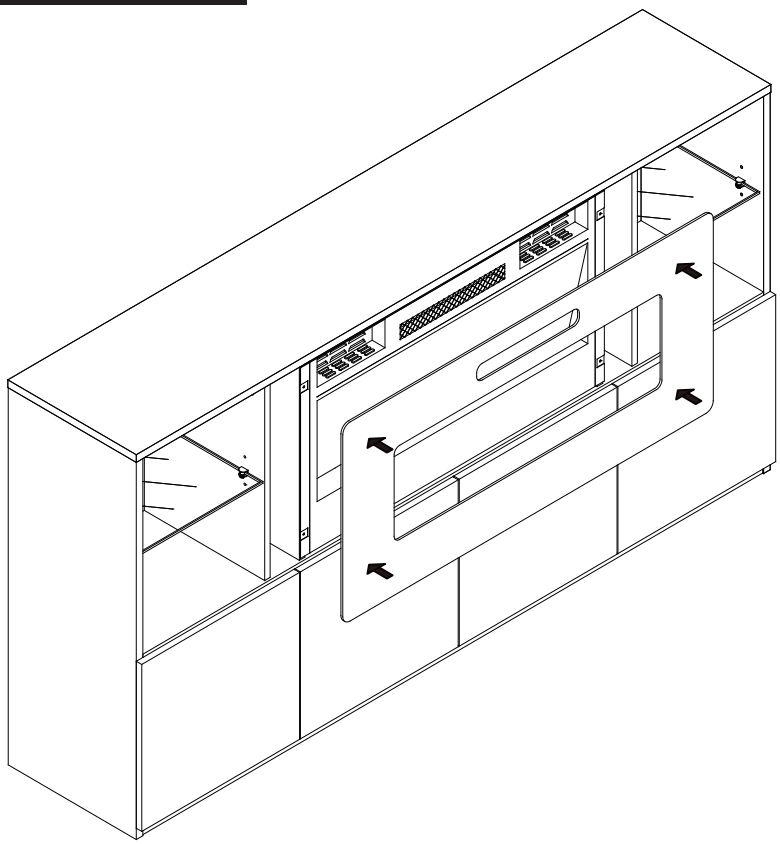

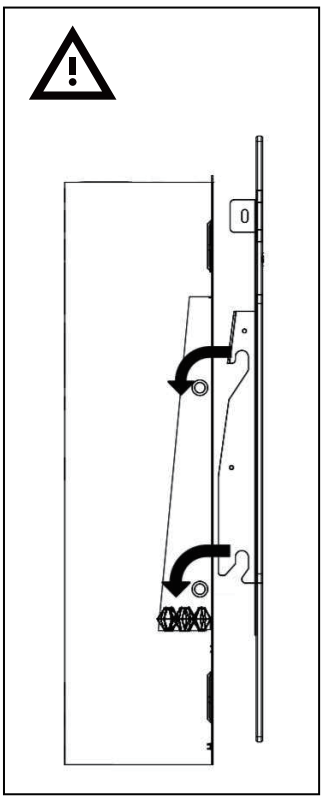

Put crystal in the fireplace, then attach the glass front to the fireplace.

Step 29

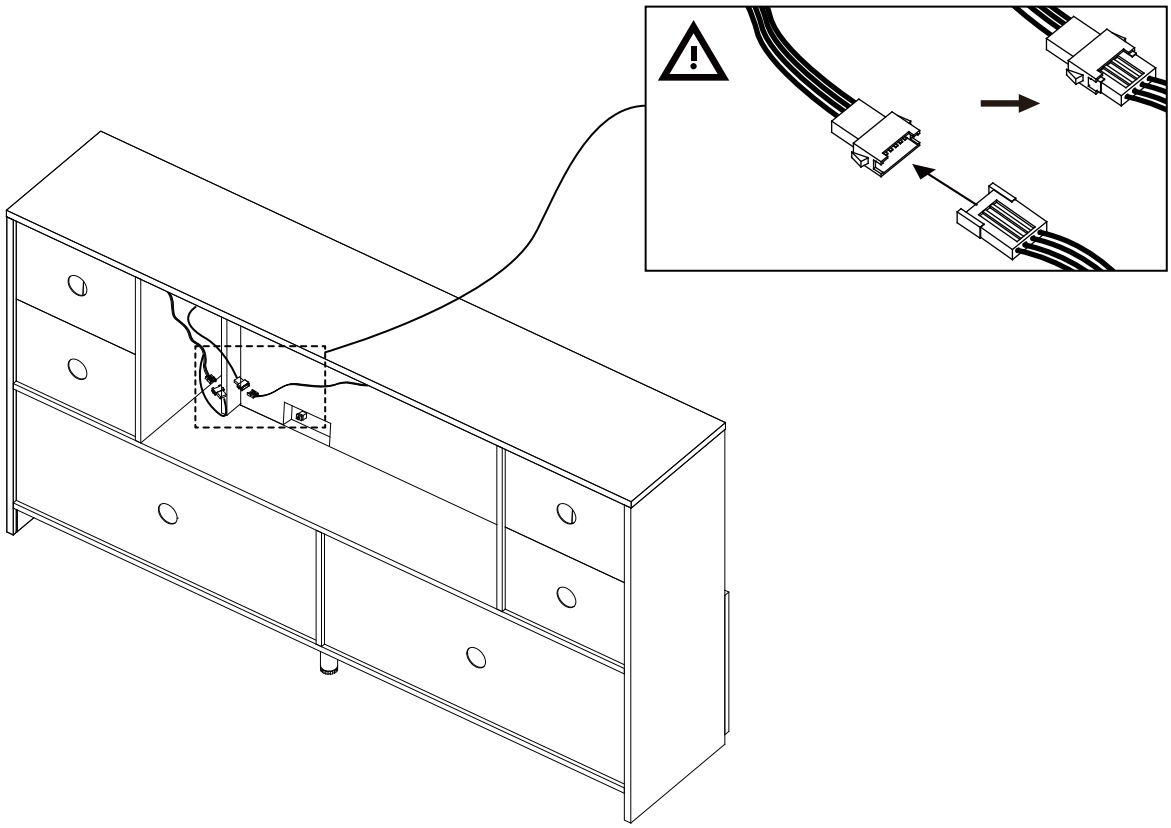

Connect LED lights with the power cable.

Assembly Instructions

Step 30

The unit is floor standing, but it is recommended that the unit is secured to the wall.

1. Move the unit into desired position.

2. Mark the wall with a suitable scribe the position of the fixing holes.

Warning:
Before driling,check wall for hidden pipes and cables.

3. Drill holes and insert 2 x wall plug

4. Attach 2 x Wall Straps to to the top of the unit using 2 x Washers and 2 x Screws

5. Secure the straps to the wall using 2 x Washers and 2 x Screws

Note: To hide the straps behind the unit, drill the holes lower than the top of the unit

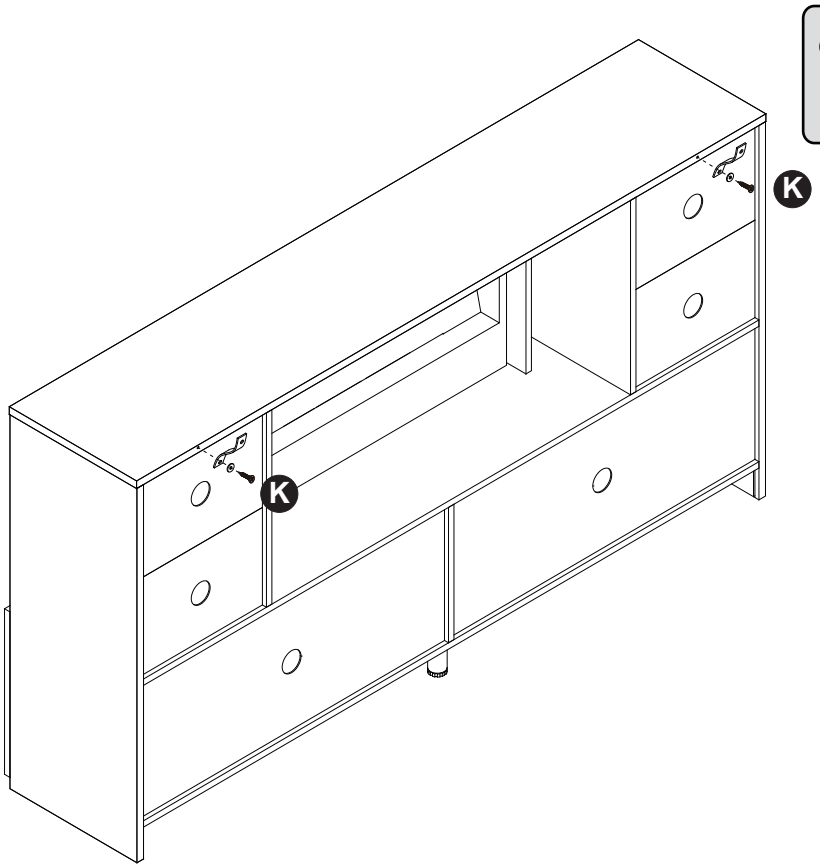

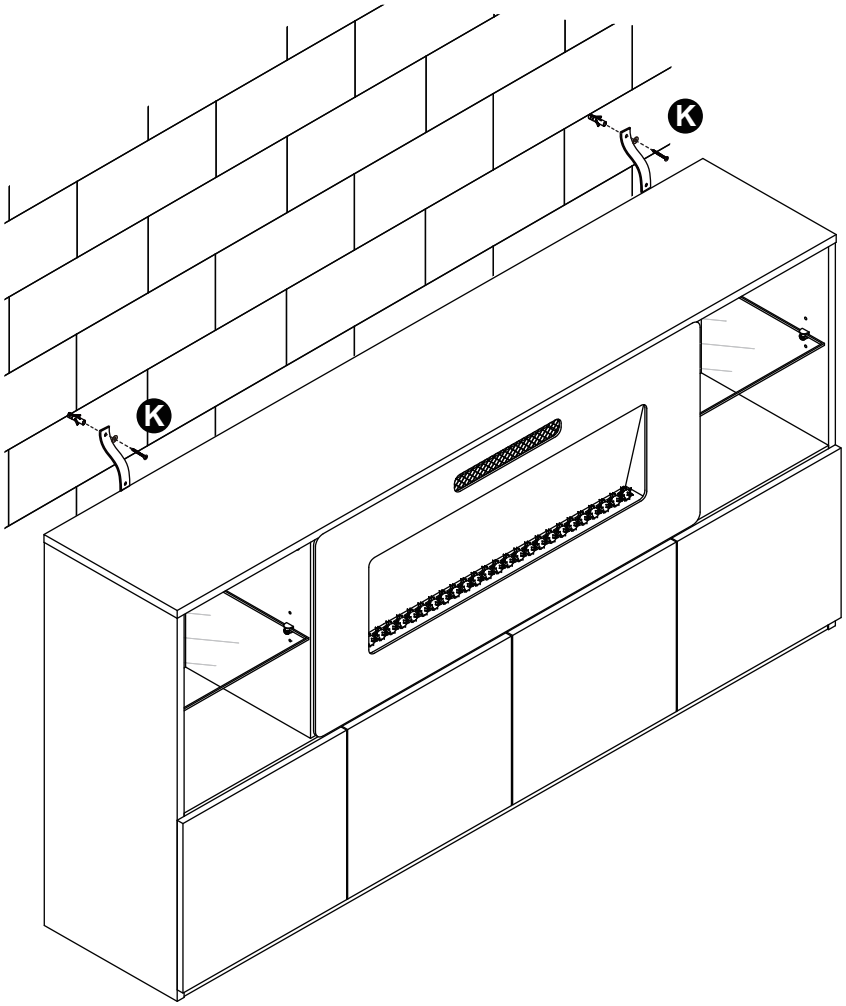

Assembly is complete.

A Guide to Wall Mounting & Fixings

Important note:

If plastic wall plugs (rawl plugs) are supplied with your product, e.g.:



- these are only suitable for use in masonry walls.

If you are in any doubt about the correct wall plugs for your wall, seek professional advice.

Failure of the product due to using the incorrect fixings is the responsibility of the installer.

Important: when drilling into walls always check that there are no hidden wires or pipes etc.

Make sure that the screws and wall plugs being used are suitable for **supporting your unit. Consult a qualified tradesperson if you** are unsure.

Hints:

1: General rule: always use a larger screw and wall plug if you are not sure.
2: Ensure you use the recommended drill bit to match the wall plug and hole size.
3: Ensure you drill the hole horizontally; do not force the drill or enlarge the hole.
4: Take extra care when drilling high walls, ceilings and ceramic tiles. Ensure wall plugs are inserted beyond the thickness of the ceramic tiles to avoid the tiles splitting or cracking.
5: Ensure wall plugs are well fitted and are a tight fit in the drilled hole.

Types of walls

You can use one of the following types of wall plug if your walls are made of brick, breeze block, concrete, stone or wood.

No.1 "General Purpose" wall plug

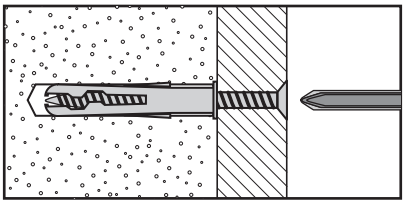

Generally aerated blocks should not be used to support heavy loads, use a specialist fitting in this case. For light loads, general purpose wall plugs can be used.

No.3 "Cavity Fixing" wall plug

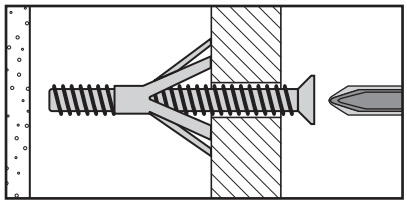

For use with plasterboard partitions or hollow wooden doors.

No.5 "Hammer Fixing" wall plug

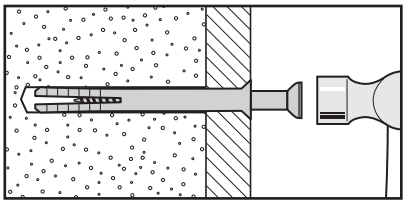

For use with walls stuck with plasterboard. The hammer fixing allows it to be fixed to the wall rather than the plasterboard. Always check the fixing is secure to the retaining wall.

No.2 " Plasterboard" wall plug

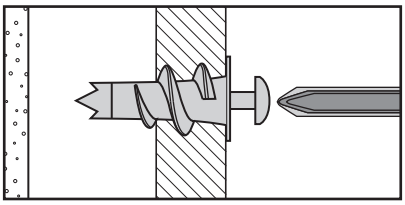

For use when attaching light loads onto plasterboard partitions.

No.4 " Cavity Fixing – Heavy Duty" wall plug

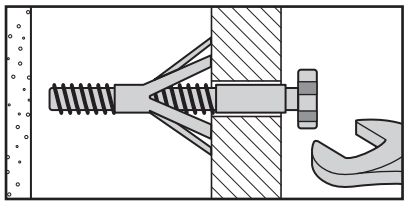

For use when fitting or supporting heavy loads such as shelving, wall cabinets and coat racks.

No.6 " Shield Anchor" wall plug – heavy loads

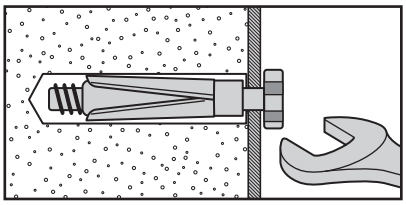

For use with heavier loads such as TV and HiFi speakers and satellite dishes etc.

Care & Maintenance

Safety: always check the fitting and location to ensure your safety in and around the home.

Fitting: from time to time check the fitting to ensure the wall plugs or screws do not become loose.