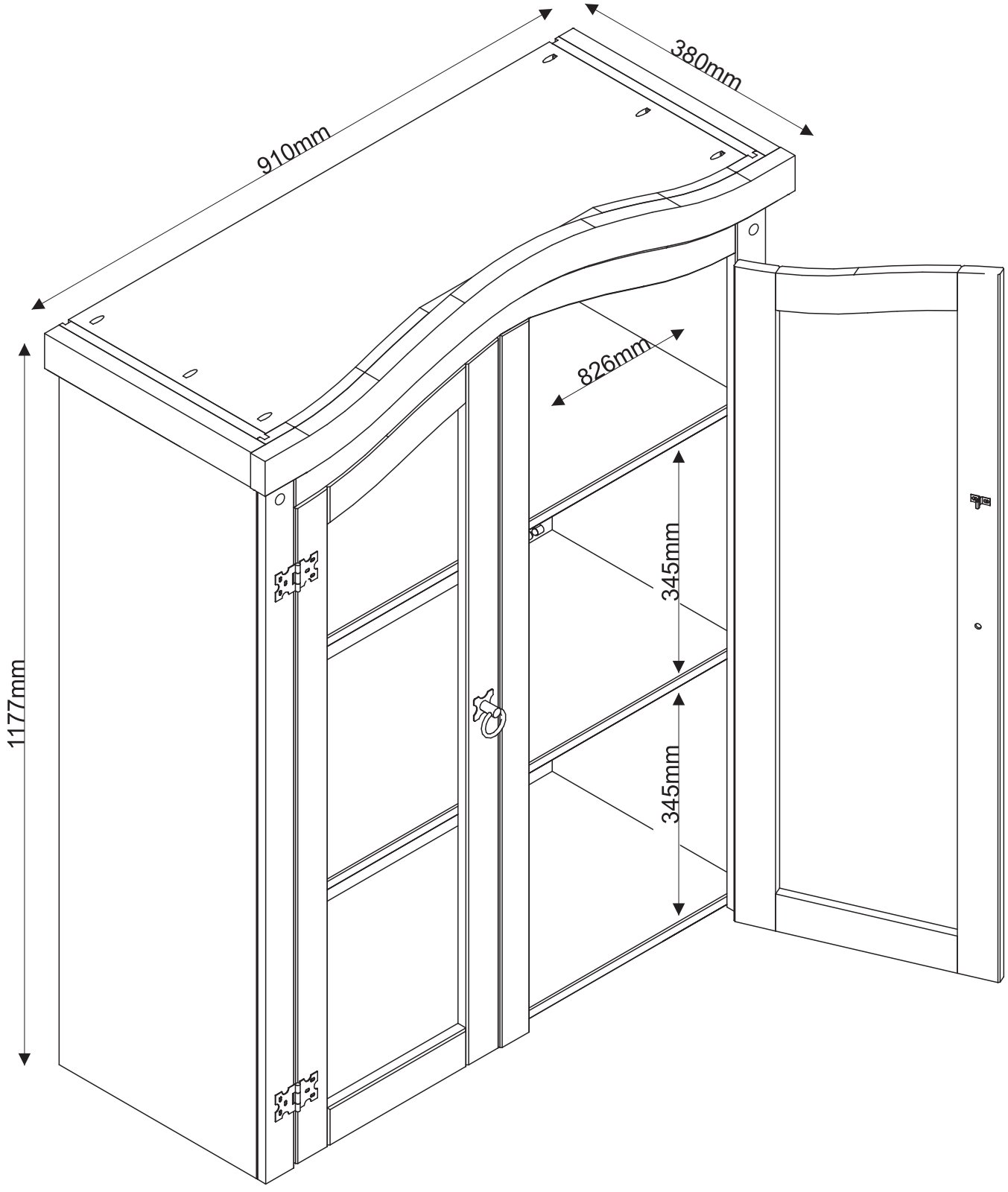
910mm
380mm
826mm
1177mm
345mm
345mm