USE INSTRUCTION MANUAL

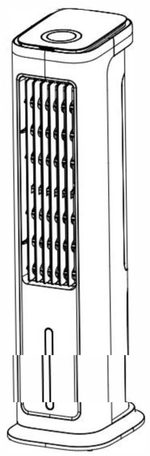

Introduction

The evaporative air cooler product is specially designed with both cooler and heating functions.It can lower and warm outlet temperature and makes the air fresh with the use if equipped ionizer and the air cooler cools the air by the process of evaporation of water，which in turn helps reducing the green house effect.
The evaporative air cooler should not be used in enclosed spaces. It is recommended to place it near an open window to create a “flow-through” effect and experience the desired cooling effect.
For the best performance, it is advised to fill the water tank with water or ice if available when using this unit. This product is suitable for diversified climatic environment for a relaxing and comforting atmosphere.

Technical Specification

Rated Voltage	220-240V
Rated Frequency	50Hz
General Power	80W
Water Tank Capacity	6L

Product Diagram

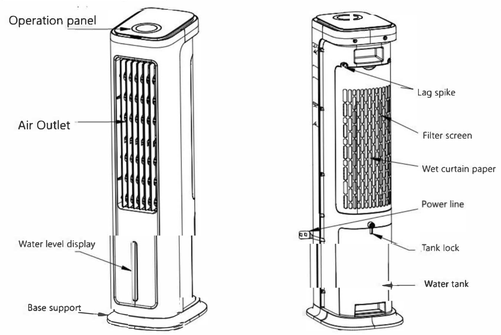

Operating the air cooler

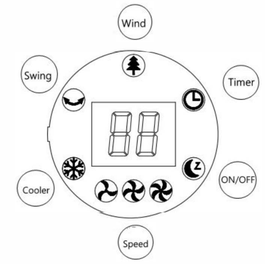

Insert plug to the electrical outlet. Press the “On-Off” button to switch the unit“On”. The LED indicator automatically shows the room temperature and shifts the fan to stand by position. The function of the unit can be controlled via on board control panel or by remote.

1. **On/Off**：Pressing the “On” button on the control panel or pressing the On/Off button on the remote control will turn he unit ON at intermediate speed. After few minutes, the fan will drop to show speed or to the pre-programmed memory setting. To switch back the standby position, simply press the “Off” button on control panel or press the “On/Off” button on remote control.
2. **Speed**: Press this key to choose between high, medium and low fan speed. Each time the “Speed” button is pressed, an icon will appear on the LED screen indicating the current speed level.
3. **Wind**：Press the “Wind” button to choose the type. Indicator light will display the selected type of wind;
   Normal：A continuous wind blow that can be adjusted to low，med and high speed.
   Natural：Nature setting provides a soft and comfortable environment with a selection of low, medium and high speed.
   Sleep:
   1.WHEN SPEED HIGH，After 30 minutes of operation in the high-grade state of natural wind, it will be transferred to the mid-range operation of natural wind, and after 30 minutes, it will be transferred to the low-grade operation of natural wind, and then continue to operate in the low-grade state of natural wind.
   2.When the wind speed is in the medium range, it shall run in the medium range of natural wind for 30min, and then turn to the low range of natural wind, and continue to run in the low range of natural wind.
   3.When the wind speed is low, continue to operate in the low natural wind speed.

4. **Timer:** Press “Timer” button to set the fan between 1-12 hours, the indicator light will show the selected time and will operate until the preset time passes. Continuously press the button to your desired running time.
   To cancel the timer, simply press the button until the indicator shows “00”.
5. **Swing**: Press “Swing” button to change the wind direction. The swing icon will appear on the screen when the function is activated. Press the button again to stop the oscillation. The vertical direction of air flow can be adjusted manually by directing the outlet louvers up and down.
6. **Cool**：Press this key to active the air cooler function. Water pump will take the water from the tank and pour it onto the cooling pad. Cooling pad absorbs the heat of the water and evaporated air is blown out through the fan. The cool breeze by the cooler drops the temperature and creates a relaxing cooling effect.
   Caution：If the water level is low or there is no water in the tank, do not activate the “Cooler ” function. Check first the water level and add clean water if needed, also to replace the stale water. It is recommended to replace water in the tank at least once in a week.
7. Remote：Remote control operates with CR2025 batteries.
   Direct the remote control to the control panel of the evaporative air cooler. If remote control is not working, first check the batteries. Replace them if needed.
   If you are not going to use it for a long time, take out the batteries to prevent damages that may occur due to battery leakage.

Operating the water tank

Check the level of water in the tank frequently. Be sure that water level is not below the “MIN” marking which is located on the water tank. Activating the “Cool” function with insufficient amount of water may cause malfunction of the water pump and warranty of your product will be void.
Before refilling water, turn your unit to “Off” position by pressing the switch located at the back panel and unplug the power cord.
Please see page 7 “water filling” article for refilling with water.

Using the ice boxes

In order to increase the cooling effect of your fan, you can use ice boxes which are included with the unit. Before using, place them in the freezing compartment of your refrigerator for a few hours. Then place them into the large section of the tank and add water reaching “MAX” level. Utilizing ice boxes drops the temperature of the air flow which will create more effective cooling effect.

Safety Precautions

1. Make sure this appliance and the power cord is not damaged before operating. In case of damage, please consult your authorized technical service.
2. Unplug the power cord plug before taking out the water tank.
3. Do not insert any objects to the ventilation or exhaust opening for this may damage the product and could cause and electrical shock or fire.
4. Do not operate your unit with a cover on it as this may result to overheat and

motor damage.
5. The plug must be removed from the electrical outlet when not in use and before moving, installing, uninstalling and cleaning.
6. Do not add any chemical or metal ingredients into the water tank. These materials are dangerous and may cause problems.
7. Be careful not to expose infant and elder directly to the air cooler for a long time.
8. This appliance should be used under the rated voltage and frequency as indicated in rating label.
9. This appliance is not intended for use of persons (including children) with reduced physical, sensory or mental capabilities, or lack of experience and knowledge, unless they have been given supervision or instruction concerning use of the appliance.
10. Do not use your air cooler in or around water may cause electric shock and risk of fire.
11. Do not pull while the power is on. Always ensure that the plug is fully inserted into the electrical outlet before operating.
12. Do not attempt to disassemble, repair or modify this appliance for the warranty will be void if repair is carried out by unauthorized person/services.
13. Do not leave your unit under direct sunlight for a long time.
14. Before using the evaporative air cooler, always ensure that it contains water. Clean the tank with fresh tap water every two weeks.

Cleaning and Maintenance

Dusts may accumulate in the dust filter or cooling pad after some time and may affect the cooler’s function. Therefore it is recommended to clean your evaporative cooler regularly. Below are written steps on how to clean this unit：
Turn off the air cooler and unplug the power cord before beginning to clean.
1. Dust Filter
To remove the dust filter, Use mild cleaning agent and soft brush in removing the dust and dirt on the filter. When done, first attach the bottom part of filter then push the upper part to secure it.
2. Cooling Pad
After removing the dust filter you can see the cooling pad. Press the lock in the middle and gently pull out the pad. Use a clean cloth or soft brush to remove dust and dirt from the pad. Rinse with clean water if needed and leave open air dry. Never use any harmful chemical solution for may cause damage to the pad.
Your cooler takes water from narrow section of the tank and pumps it on the cooling pad. The water flowing through the cooling pad goes down to the large section of the tank. The cycle results to absorption of dust and dirt in the air which makes the air safer and fresher to breathe. The filter that is located at the middle portion of the tank cleanses the water that passes through it and should be attached to its place upon use of the unit.

Troubleshooting Guide

Problem	Possible Cause	Solution
1.Fan does not work	1. Power cord is not plugged or not properly. 2. On/Off button at the back panel is not turned to ON position 3. The “On” button on the control panel is not activated.	1. Plug the power cord properly 2. Press the On/Off button at the back panel to on position 3. Press the “On” button on the control panel.
2. The temperature of air being expelled by the cooler is not cold enough.	1.Dust accumulates on the dust filter and cooling pad 2. Water level in the tank is below“MIN” level.	1. Follow the steps in cleaning the dust filter and cooling pad. 2. Turn off the unit, refill the tank with clean tap water, turn the power position and cool to on.
3.Press the Off bottom,the machine continual working	If you use the heating function,the machine need cooling down to avoid over-head	The machine will Off in 30 seconds