ASSEMBLY INSTRUCTION

SUNBED

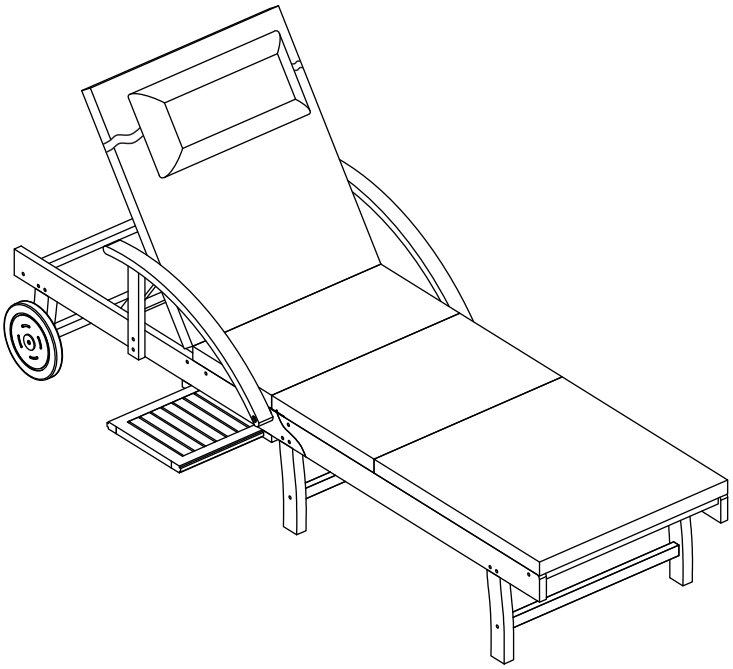

Notice

1. **50% Tighten before fixings all screws, Allen wrench is recommended instead of an electric drill.**
2. **Place the item on a flat ground to adjust and make sure it remains stable.**
3. **Tighten up all screws with tools gradually.**
4. **If the screws are not aligned with holes during assembly, please loosen all all the other screws to 50% and continue the assembly process.**
5. **If the item is not stable, please loosen all the screws, adjust it on a flat ground and tighten up all screws again.**
6. **Note: If one or more screws are fully tightened during assembly, chances are the others will not be aligned with holes. In addition, all the holes are disigned to be relatively larger to provide more space for the adjustment of the screws.**

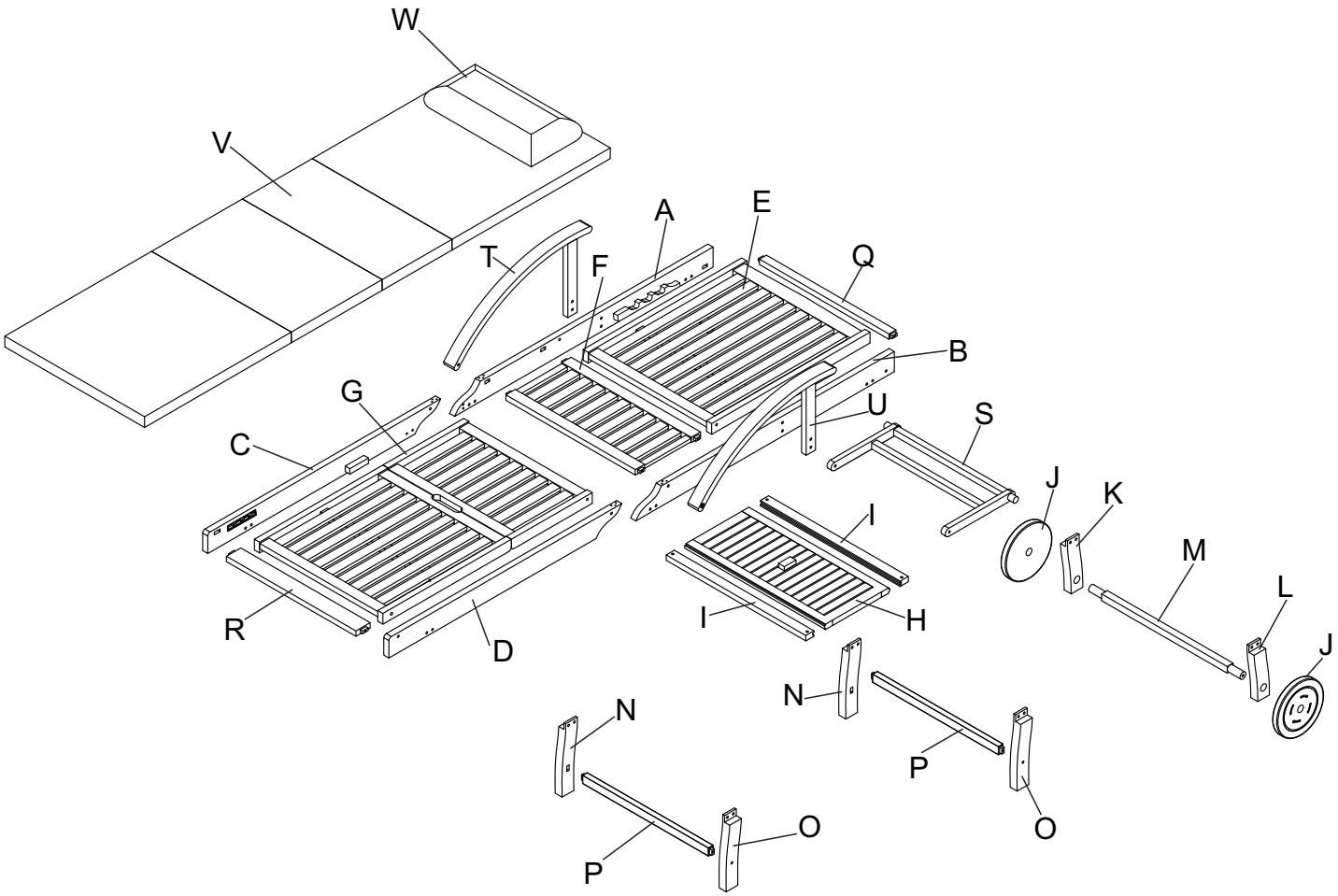
W
V
A
E
T
F
Q
B
G
U
S
C
J
K
I
M
L
R
I
H
D
J
N
N
P
O
P
O

A 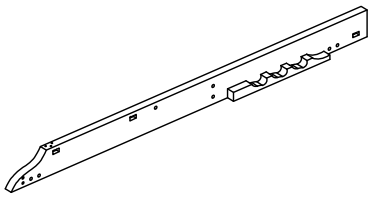 1 pc	B 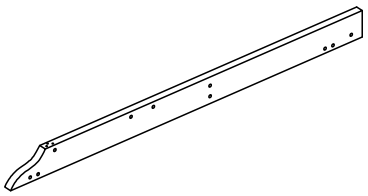 1 pc	C 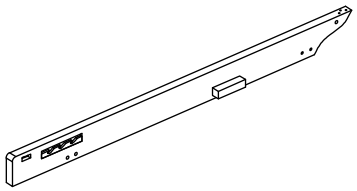 1 pc
D 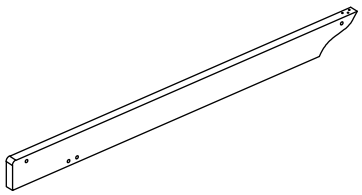 1 pc	E 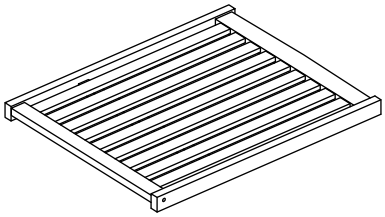 1 pc	F 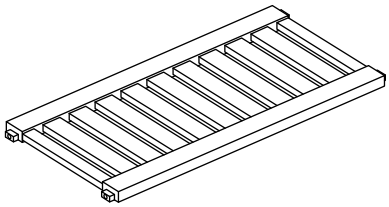 1 pc
G 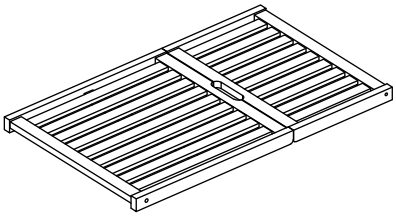 1 pc	H 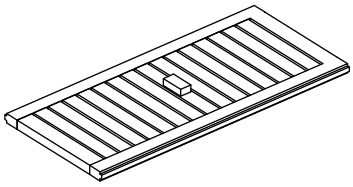 1 pc	I 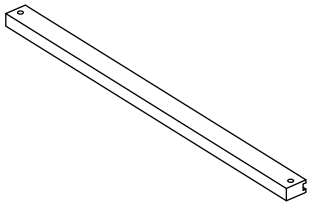 2 pcs
J  2 pcs	K  1 pc	L  1 pc
M 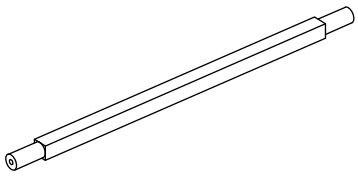 1 pc	N  2 pcs	O  2 pcs
P 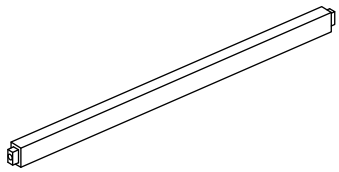 2 pcs	Q 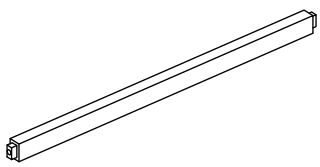 1 pc	R 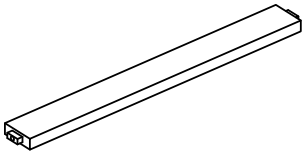 1 pc

S 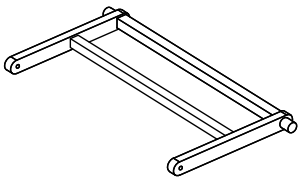 1 pc	T 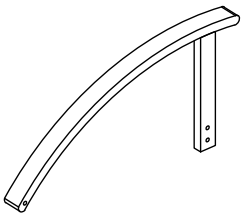 1 pc	U 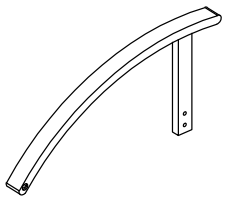 1 pc
V 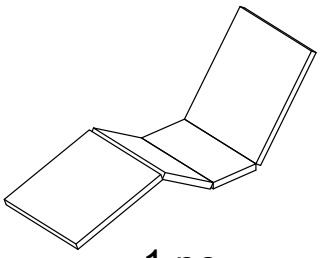 1 pc	W 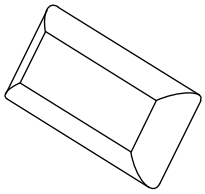 1 pc	
1  **Screw M4x12 mm (20 pcs)+extra 1 pcs**	2 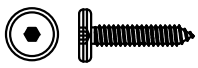 **Screw M6x30 mm (2 pcs)+extra 1 pcs**	3 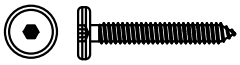 **Screw M6x50 mm (18 pcs)+extra 1 pcs**
4 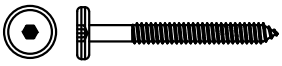 **Screw M6x80 mm (2 pcs)+extra 1 pcs**	5 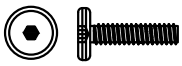 **Bolt M6x25 mm (12 pcs)+extra 1 pcs**	6 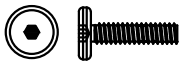 **Bolt M6x35 mm (2 pcs)+extra 1 pcs**
7 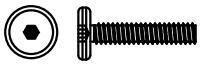 **Bolt M6x40 mm (4 pcs)+extra 1 pcs**	8 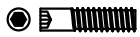 **Bolt M8x25 mm (2 pcs)+extra 1 pcs**	9  **Sleeve nut M6x15 mm (12 pcs)+extra 1 pcs**
10  **Steel washers 25/40x2 mm (2 pcs)+extra 1 pcs**	11  **Steel washers 6/40x2 mm (2 pcs)+extra 1 pcs**	12  **Plastic washers 6/20x1 mm (2 pcs)+extra 1 pcs**
13  **Plastic washers 6/20x2 mm (4 pcs)+extra 1 pcs**	14  **Plastic washers 6/20x4 mm (6 pcs)+extra 1 pcs**	15 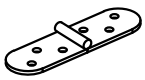 **Hinges 2 pcs**
16 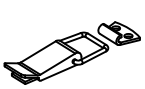 **Lock 2 pcs**	17  **Allen Wrench 2 pcs**	18 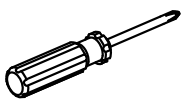 **Screwdriver (Not provided)**

Step 1

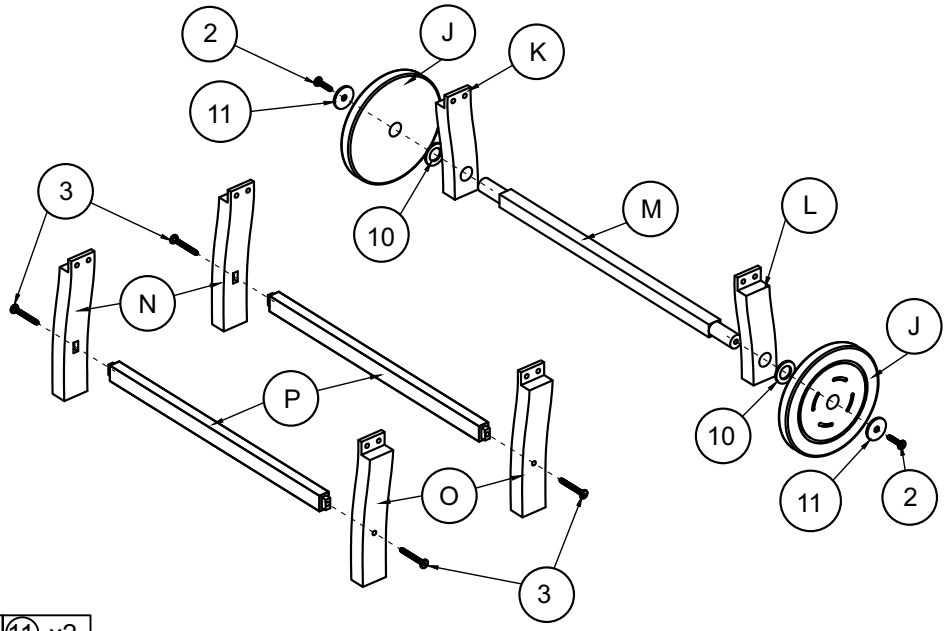

② x2	③ x4	⑩ x2	⑪ x2

Step 2

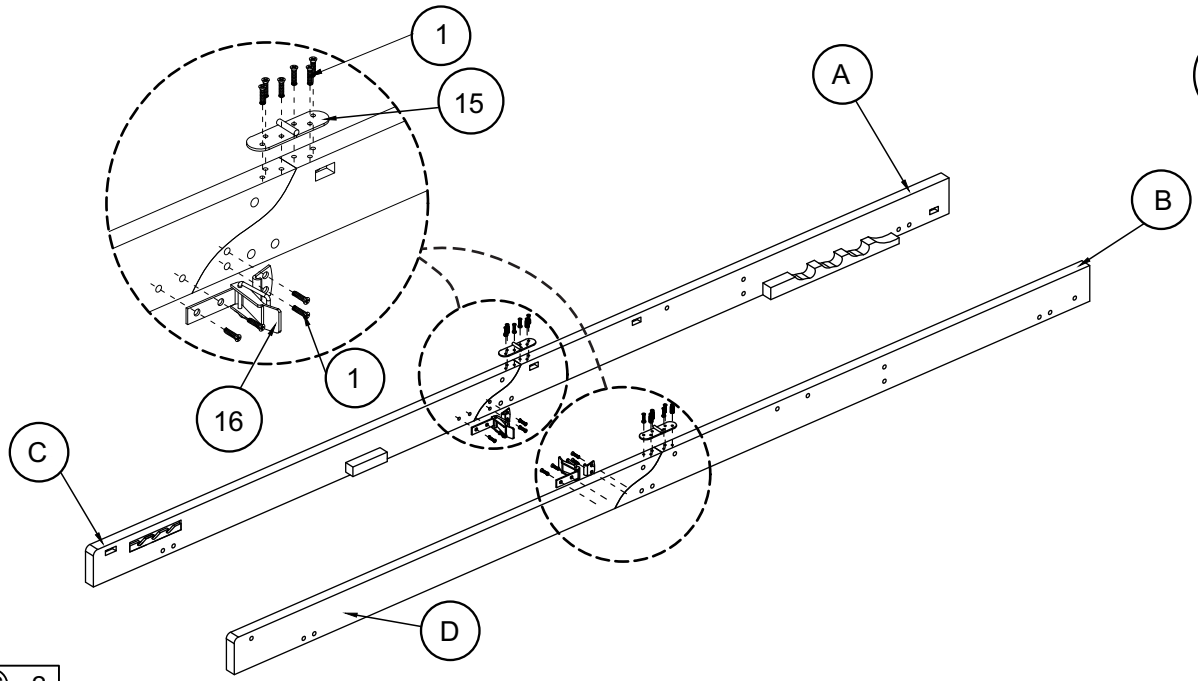

① x20	⑮ x2	⑯ x2

Step 3

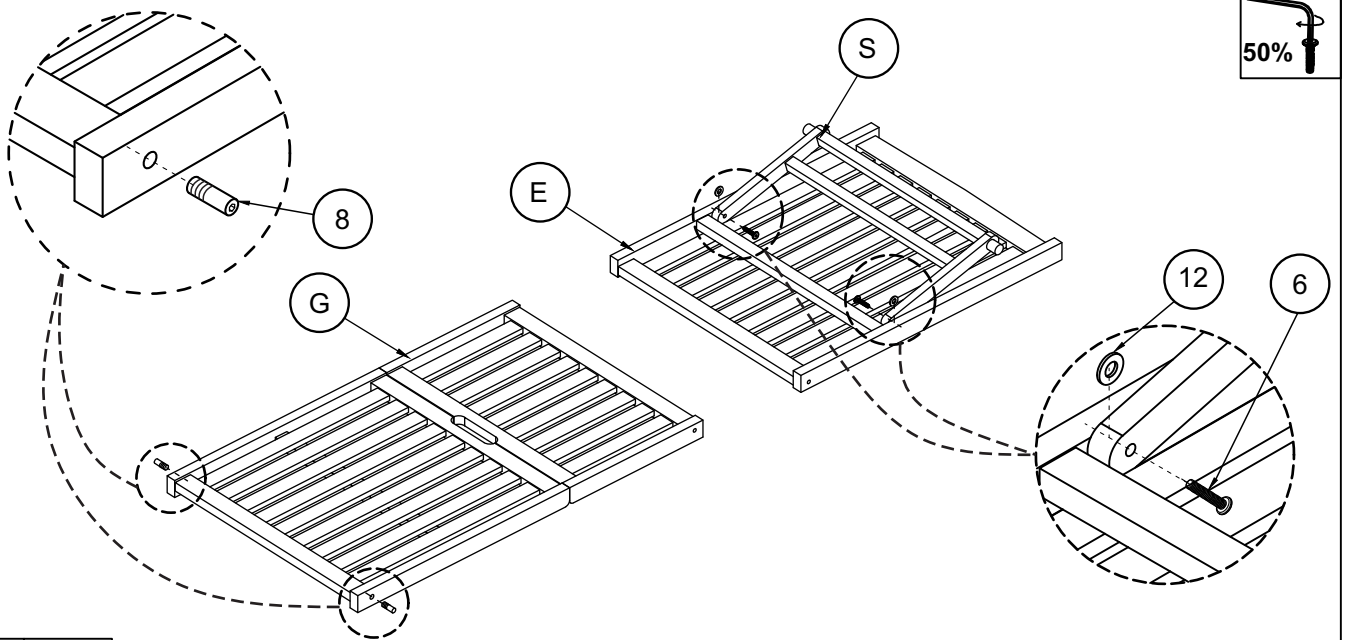

⑥ x2	⑧ x2	⑫ x2

Step 4

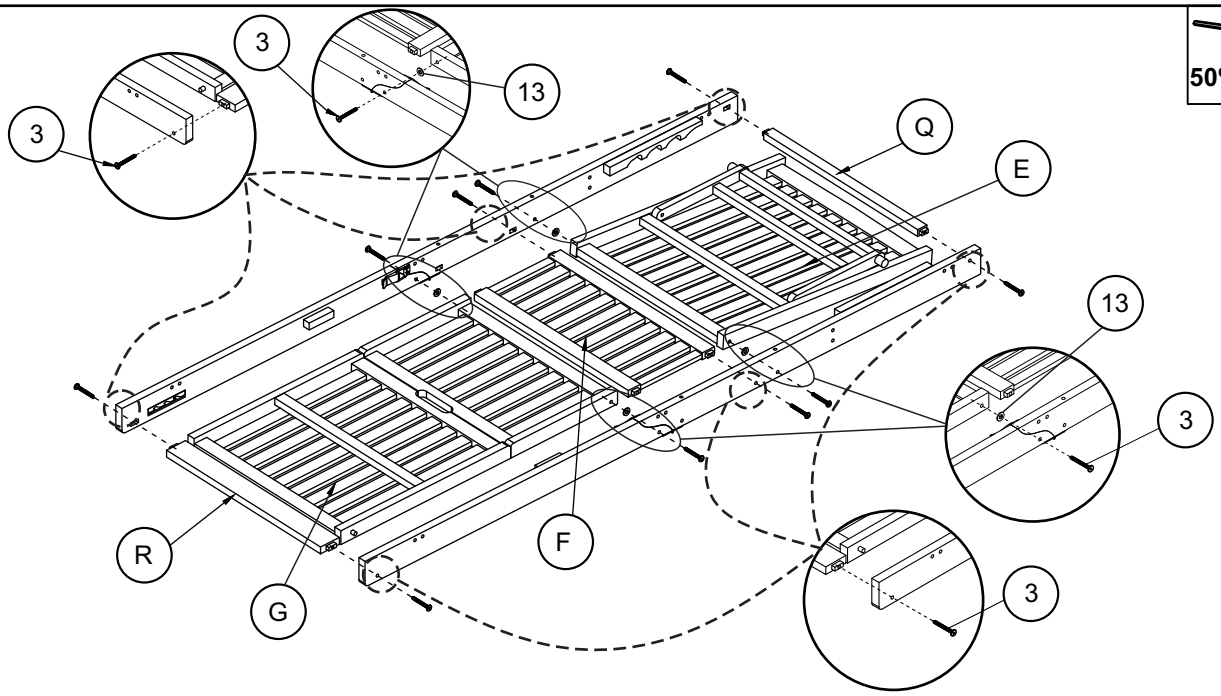

50%

③x10 ⑬ x4

Step 5

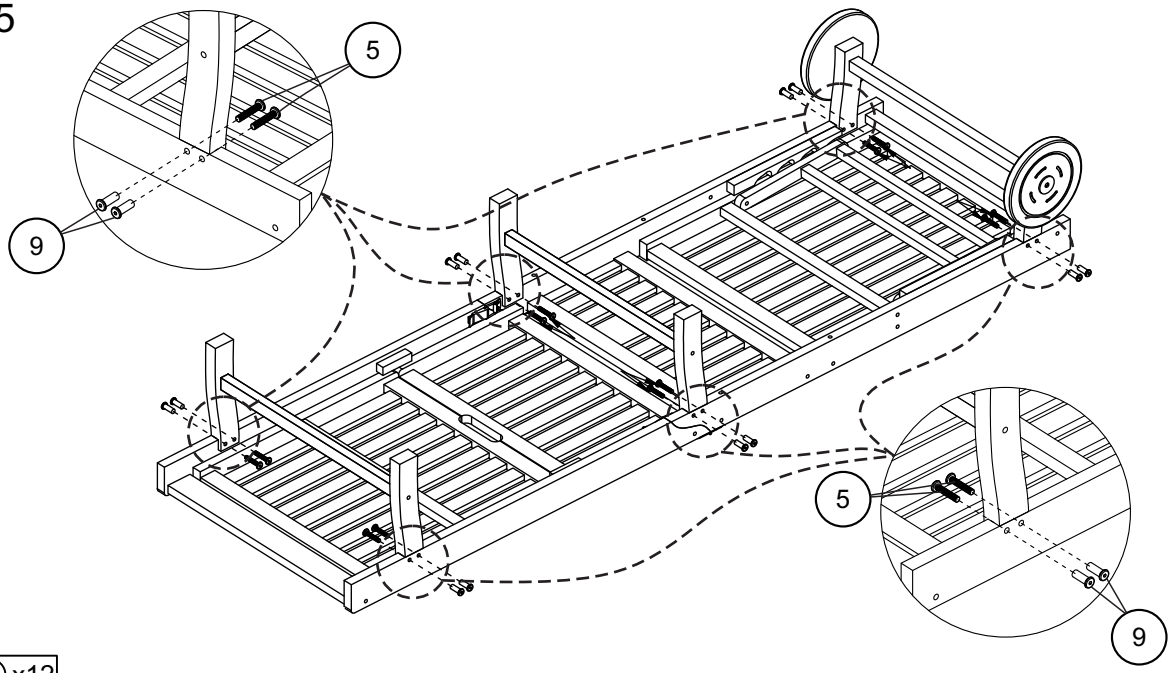

50%

⑤x12 ⑨ x12

Step 6

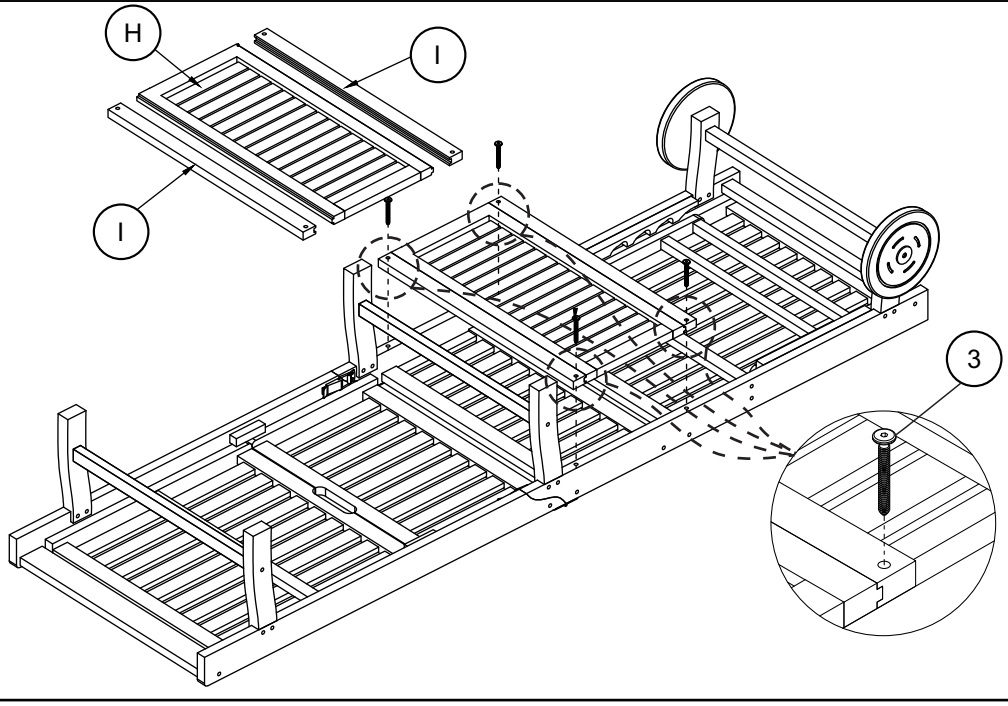

50%

③x4

Step 7

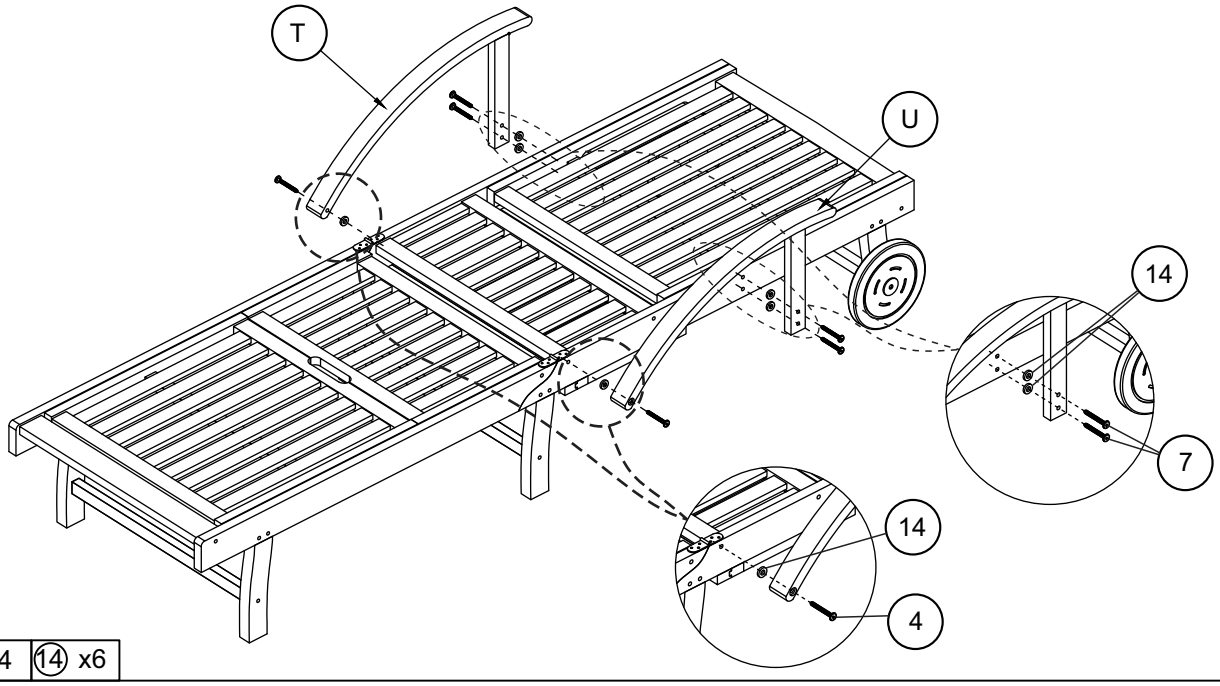

④ x2	⑦ x4	⑭ x6

Step 8

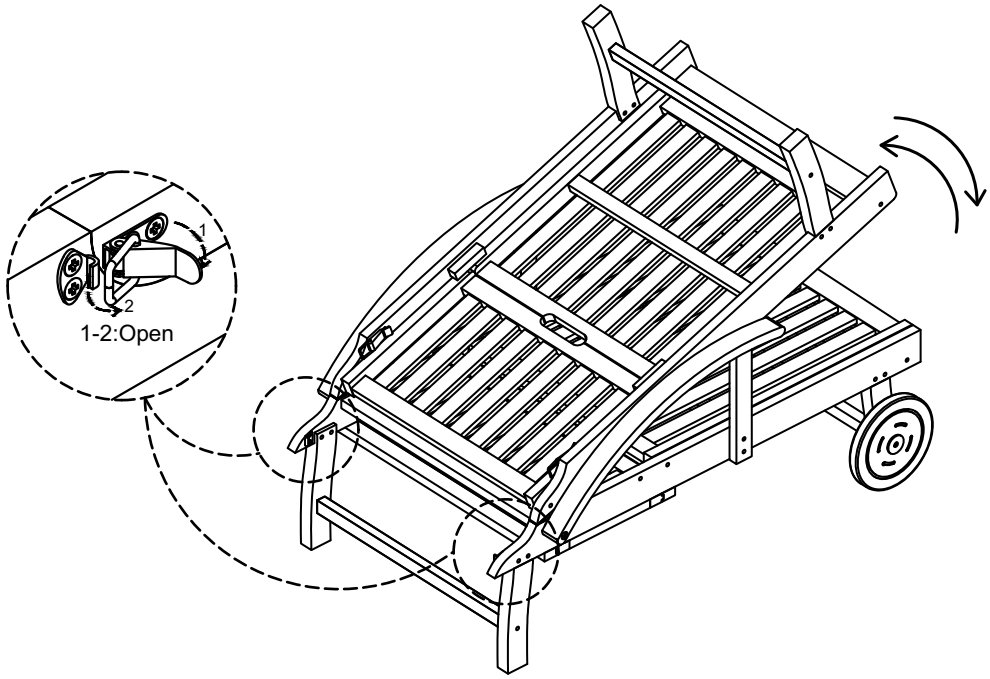

Step 9

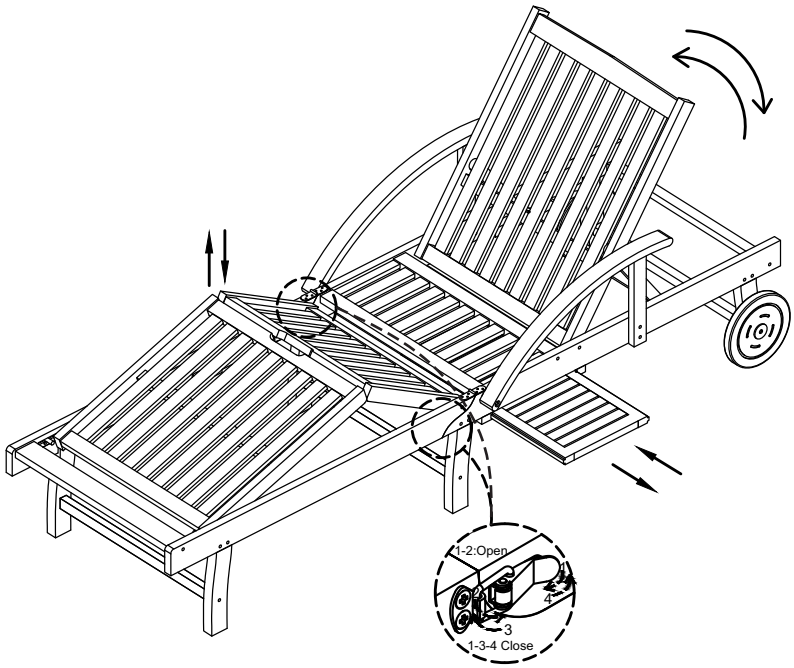

Step 10

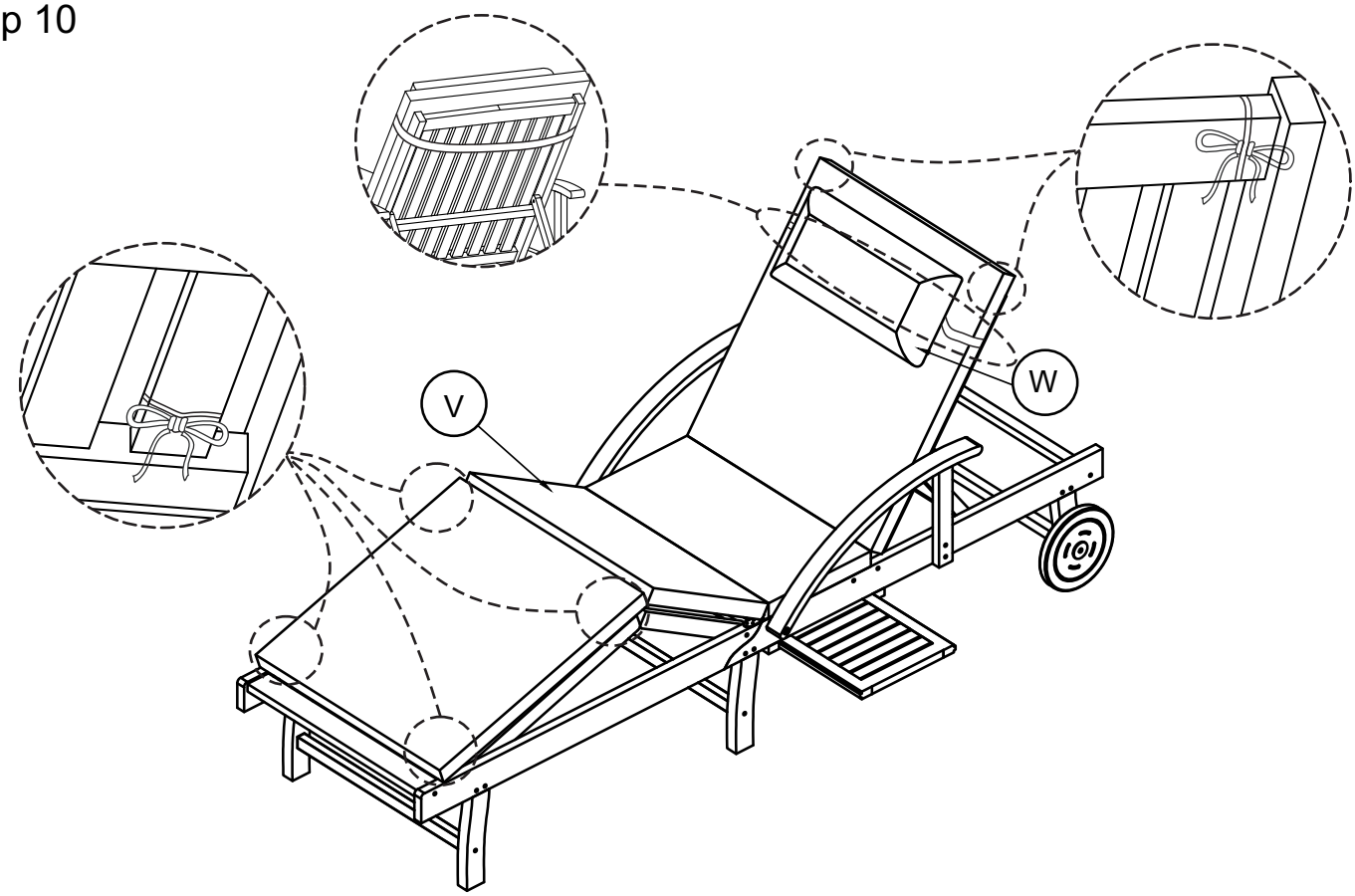

Step 11

