Assembly Instruction

Thank you for purchasing this quality product! Make sure all components and small hardware parts are included in the package before you start to assemble the product.

MODEL:1224-3PC-1PWR-L-SEC-CHS-LAF

Components List

C	F	I
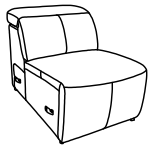 X1	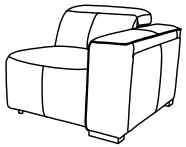 X1	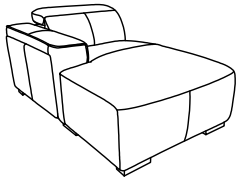 X1

Step 1 Assemble hooks

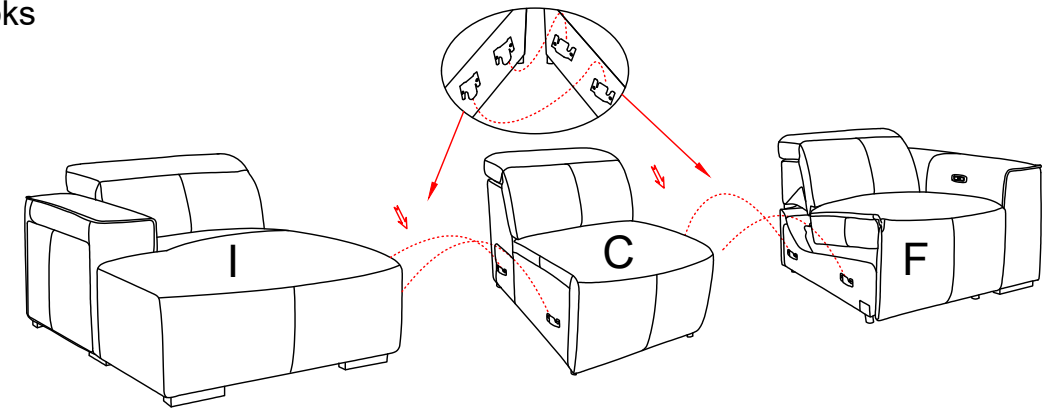

Step 2 Finished

