TV Stand

Assembly Instruction – Please keep properly for future reference.

If you find any missing boxes, damaged parts, or accessory shortages, please contact the customer service team of your purchasing channel immediately. We will resolve the issue as quickly as possible.

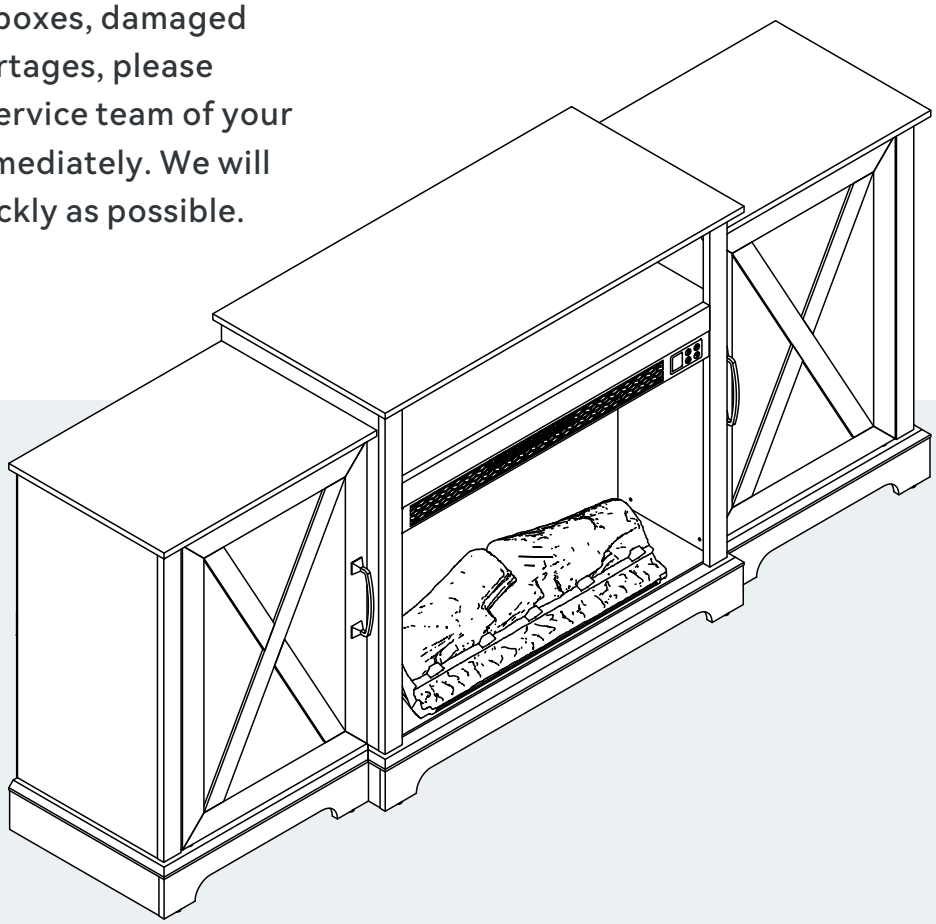

Arrive in 2 separate boxes and may not be part of the same shipment; Please install the product after receiving all the packages.

CONTACT US

- In order to receive assistance more quickly, please provide

THE FOLLOWING INFORMATION:

- Order number
- Purchase platform
- Purchase date
- Detailed description of the issue along with photos (if applicable)

Important – Please read these instructions carefully before starting the installation.

EN

Safety and Care Advice

Important – Please read these instructions fully before starting assembly

- Check you have all the components and tools listed on the following pages.
- Remove all fittings from the plastic bags and separate them into their groups.
- Keep children and animals away from the work area, small parts could choke if swallowed.
- Make sure you have enough space to layout the parts before starting.
- During assembly do not stand or put weight on the product, this could cause damage.
- Assemble the item as close to its final position (in the same room) as possible.
- Assemble on a soft level surface to avoid damaging the unit or your floor.
- Parts of the assembly will be easier with 2 people.



- To reduce the likelihood of damaging your product please ensure that
- your power drill is set on a low torque setting.

Care and maintenance

- Only clean using a damp cloth and mild detergent, do not use bleach or abrasive cleaners.
- From time to time check that there are no loose screws on this unit.
- This product should not be discarded with household waste. Take to your local authority waste disposal center.

Handy Hints

- Assemble all parts and bolts loosely during assembly, only once the product is complete should you fully tighten the bolts.
- Regularly check and ensure that all bolts and fittings are tightened properly.

WARNING

In order to help prevent overturning – please follow these instructions

To help prevent product toppling over please follow the below steps:

- Use the anti tip strap or wall fixing method provided (if applicable).
- Do not allow children to climb or hang on the furniture.
- Do not open more than one drawer at a time.
- Do not place heavy items in the top drawers.
- Do not place heavy items on top of the furniture, unless the furniture has been designed for this purpose.
- Please note that only the anti tip strap is provided. You will need to provide wall plugs and screws applicable for your wall type.

CUSTOMER SERVICE GUIDE

Thank you for choosing our product! We are committed to providing you with excellent service. If you find any missing parts, damaged packaging, or product damage after receiving all packages, please follow the steps below to quickly contact our customer service team. We will do our best to resolve your issue.

1. Missing Parts

Verify Parts:

1. Refer to the **"Parts List"** in the manual to verify the name, specifications, and quantity of the missing parts.
2. Take a clear photo of the parts list and mark the missing parts with detailed information, e.g., "Missing 5 pieces of M6X30mm screws."

Contact Us:

· **By Email:**

Send an email with the subject line "Missing Parts Issue." Include the following in the email:

· A description of the missing parts and a photo of the parts list.
· Order details (order number, purchase platform, purchase date).

2. Product or Packaging Damage

If it affects normal use:

Steps:

1. Take clear photos or videos showing the damaged parts and the extent of the damage (multiangle shots are recommended).
2. Email the photos/videos along with order details with the subject line "Product Damage Issue."

Resolution:

After verification, we will arrange for a replacement part, product exchange, or refund as quickly as possible.

If it does not affect normal use:

Steps:

1. Contact our customer service team.
2. Provide a description of the damage and include relevant photos or videos.

Resolution:

We will provide repair guidance or an appropriate compensation plan based on the specific situation.

Helpful Tips

To process your issue efficiently, please prepare the following information:

· Order details (order number, purchase platform, purchase date).
· Clear photos or videos.
· We are committed to providing quick and professional solutions, no matter the size of the issue, to ensure your satisfaction.

Thank you for your trust and support! We hope you enjoy using our product!

Parts List - Panels

Please check you have all the panels listed below

Box 1

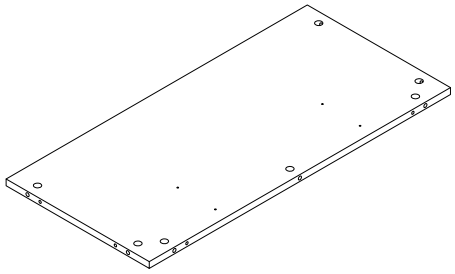

2 (76.8*36.5*1.5cm) X 1

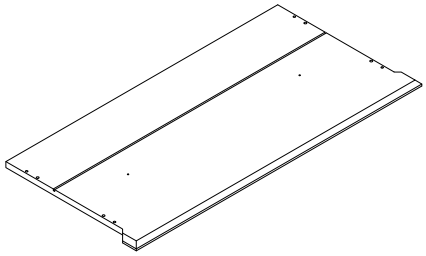

7 (83.2*40*1.5cm) X 1

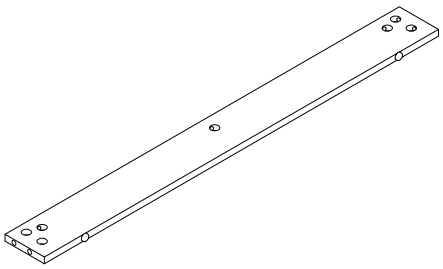

8 (80.4*8*1.2cm) X 1

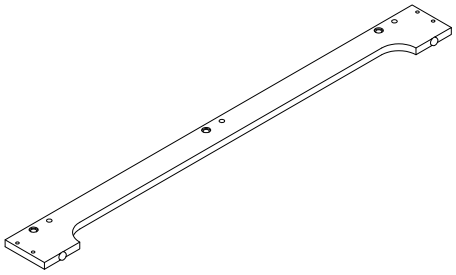

22 (83*8*1.2cm) X 1

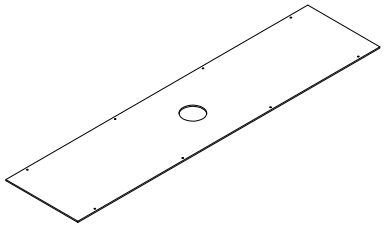

24 (77*18.4*0.3cm) X 1

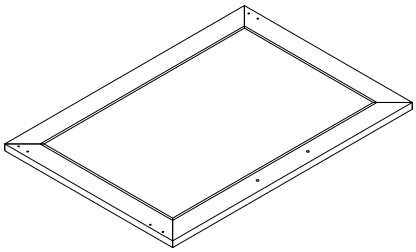

26 (61.1*42.8*1.5cm) X 1

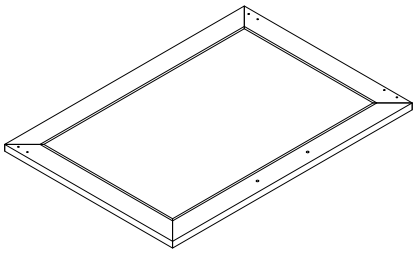

27 (61.1*42.8*1.5cm) X 1

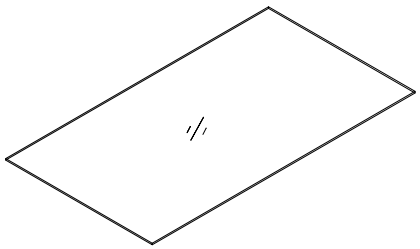

28 (76.6*42.7*0.4cm) X 1

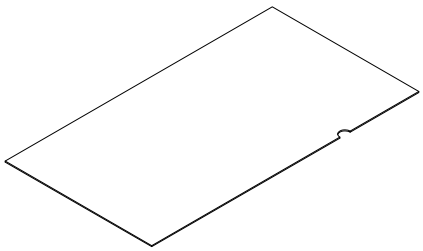

30 (42.7*77.8*0.3cm) X 1

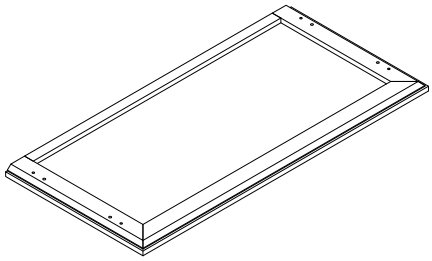

31 (83.2*40*2.4cm) X 1

Parts List - Fireplace

Box 1（Fireplace)

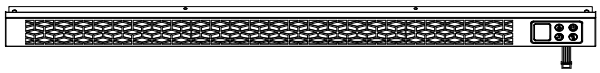

BB x 1

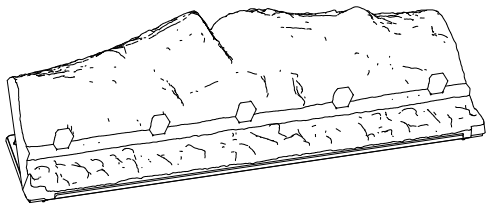

AA x 1

Parts List - Fittings

Please check you have all the fittings listed below

Note: The quantities below are the correct amount to complete the assembly. In some cases more fittings may be supplied than are required.

Ⓐ 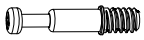

7*34mm Cam Bolt x 74+4

Ⓑ 

Cam Lock x 74+4

Ⓒ 

6*30mm Wooden Dowel x 44+4

Ⓓ 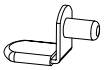

Shelf Pin x 8

Ⓔ 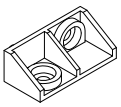

Plastic Connector x 11

Ⓕ 

Ø1/4"x12mm Screw x 22+2

Ⓖ 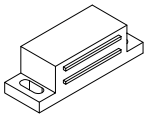

Magnet x 2

Ⓗ 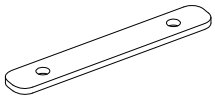

Sheet iron x 2

Ⓘ 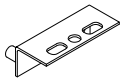

Pivot hinge(Left) x 2

Ⓙ 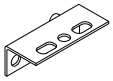

Pivot hinge(Right) x 2

Ⓚ 

Hinge rubber sleeve x 4

Ⓛ 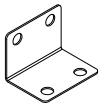

Metal Connector x 4

Ⓜ 

M5×12mm Screw x 6

Ⓝ 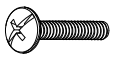

Ø5/32"×19mm Screw x 4

Ⓞ 

Ø2.9*12mm Screw x 16+1

Ⓟ 

Ø3.9*12mm Screw x 16+1

Ⓠ 

Beauty patch x 39+4

Ⓡ 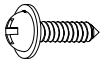

Ø3.5×12mm Screw x 50+4

Ⓢ 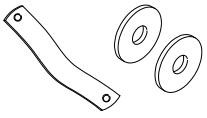

x 2

Ⓣ 

x 2

Ⓤ 

Handle x 2

Parts List - Panels

Please check you have all the panels listed below

Box 2

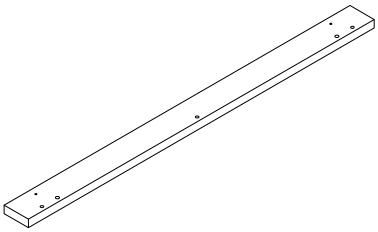

1 (71.3*5*1.5cm) X 1

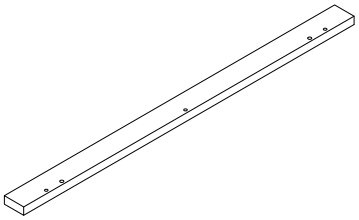

3 (68.1*4*1.5cm) X 2

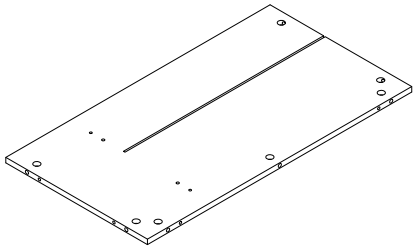

4 (68.1*36.5*1.2cm) X 1

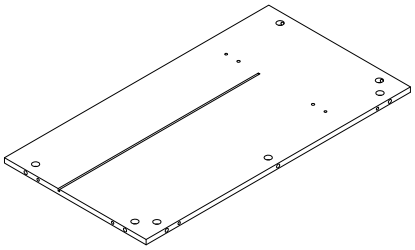

5 (68.1*36.5*1.2cm) X 1

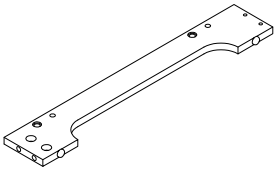

9 (47.4*8*1.2cm) X 1

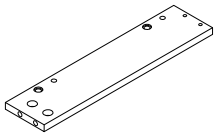

10 (34.7*8*1.2cm) X 1

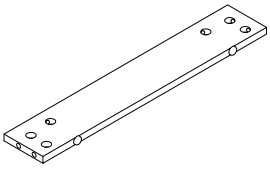

11 (46*8*1.2cm) X 2

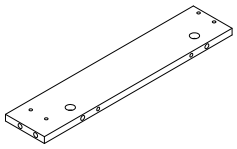

12 (38.7*8*1.2cm) X 1

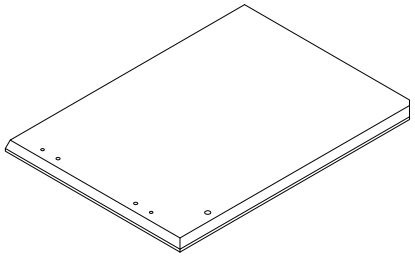

13 (49.3*36*1.5cm) X 1

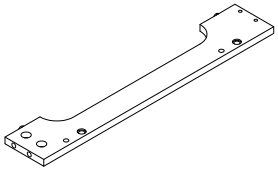

14 (47.4*8*1.2cm) X 1

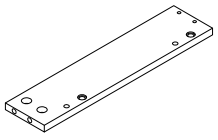

15 (34.7*8*1.2cm) X 1

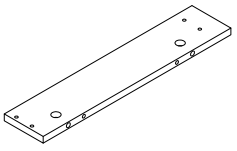

16 (38.7*8*1.2cm) X 1

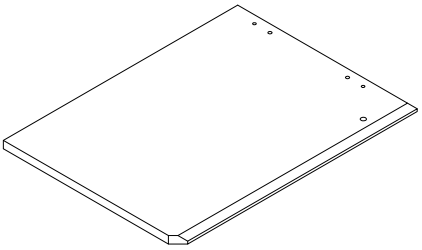

17 (49.3*36*1.5cm) X 1

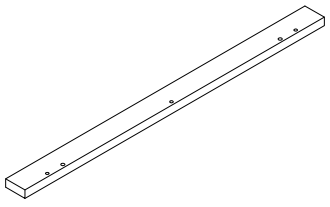

18 (61.7*4*1.5cm) X 2

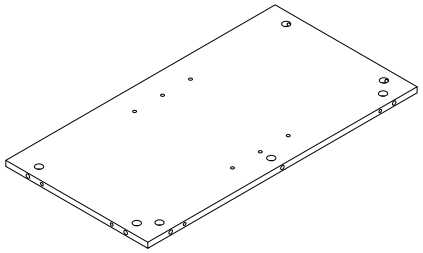

19 (61.7*32.5*1.2cm) X 2

Parts List - Panels

Please check you have all the panels listed below

Box 2

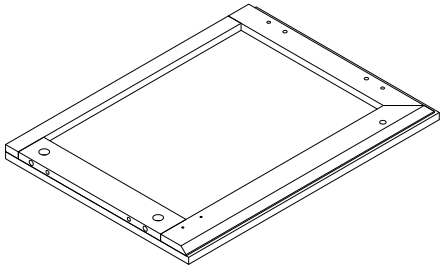

20 (49.2*36*2.4cm) X 1

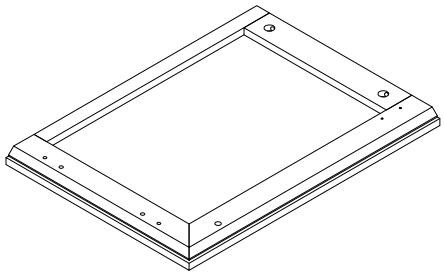

21 (49.2*36*2.4cm) X 1

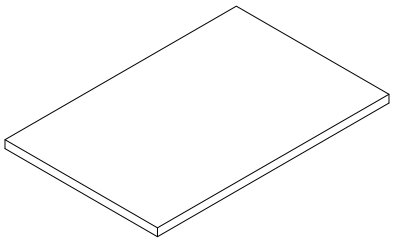

23 (45.5*30*1.5cm) X 2

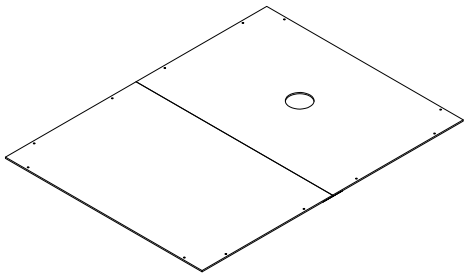

25 (64.2*48.3*1.2cm) X 2

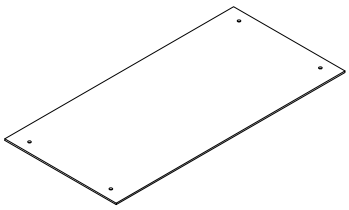

29 (45*22*0.3cm) X 2

Box 2 (Fireplace)

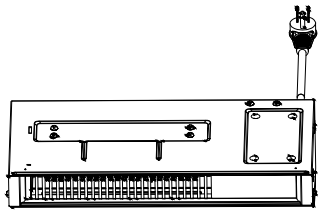

CC x 1



DD x 2

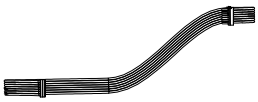

EE x 1

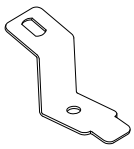

FF x 2

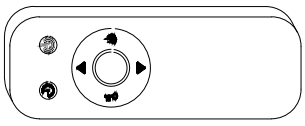

Remote control x 1



Plastic cable tie x 1

Assembly Instructions

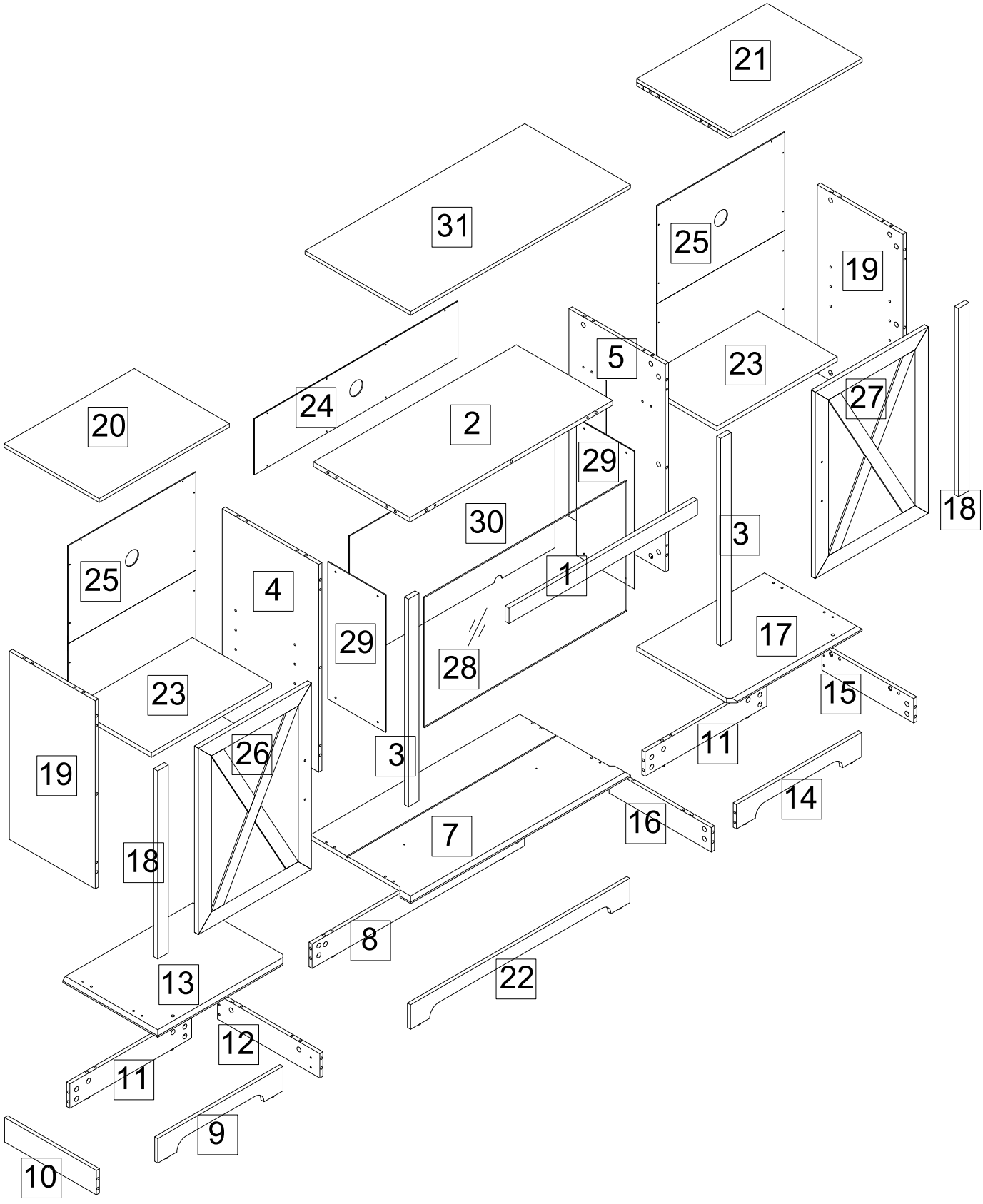

Assembly Instructions

Step 1

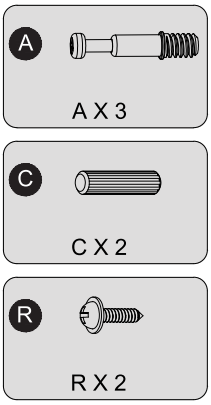

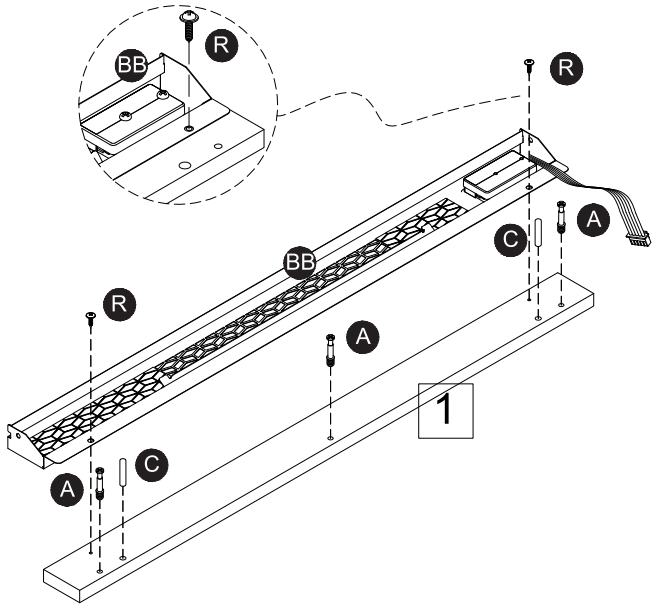

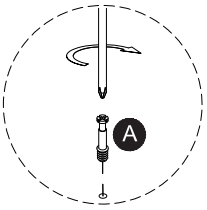

A. Install 3 cam lock screws (A) into the Front Rail (1), then insert 2 wooden dowels (C).
B. Attach the Air Outlet (BB) to the Front Rail (1) using 2 screws (R).

Step 2

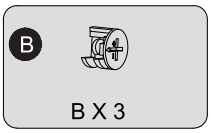

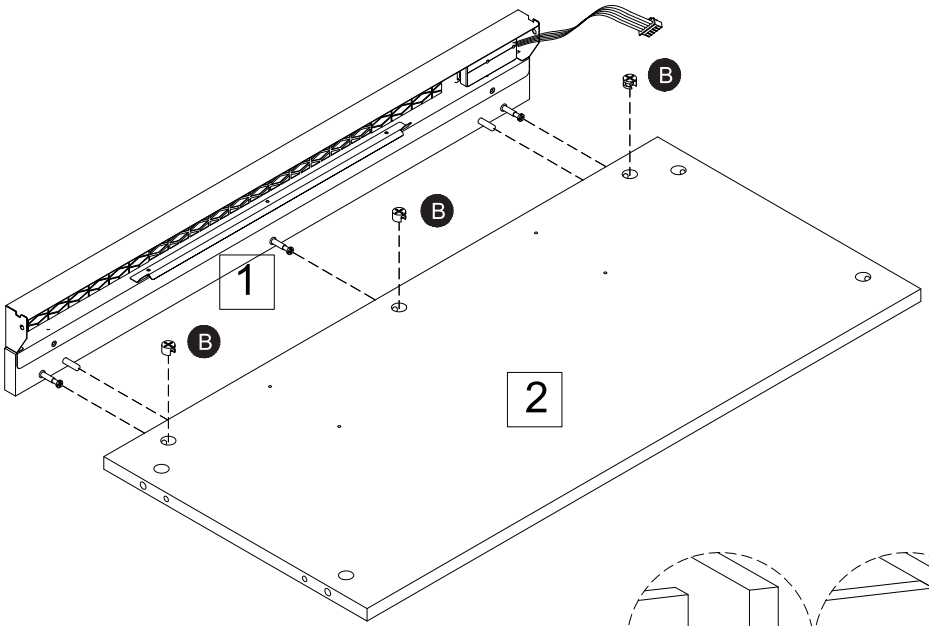

Secure the Front Rail (1) to the Shelf Panel (2) using 3 cam locks (B). Tighten securely.

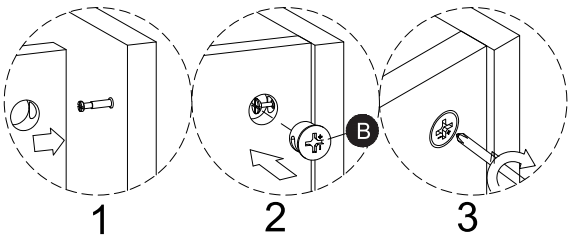

Assembly Instructions

Step 3

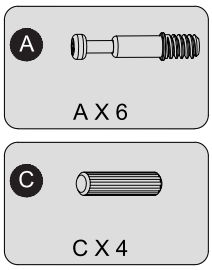

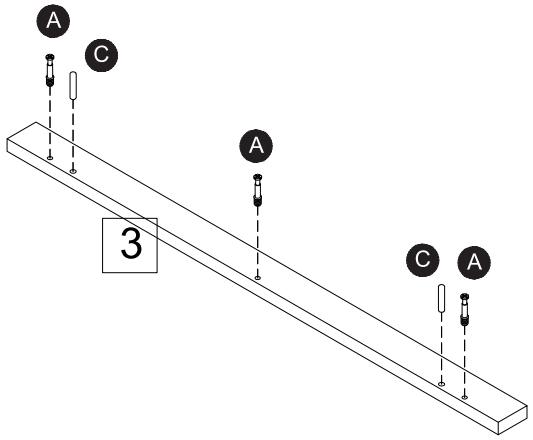

X 2

For each Front Side Rail (3) (2 pieces total), install 3 cam lock screws (A) and insert 2 wooden dowels (C).

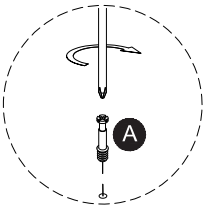

Step 4

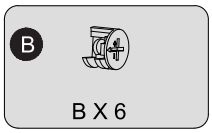

A. Secure one Front Side Rail (3) to Side Panel (4) using 3 cam locks (B). Tighten securely.

B. Secure the other Front Side Rail (3) to Side Panel (5) using 3 cam locks (B). Tighten securely.

Assembly Instructions

Step 5

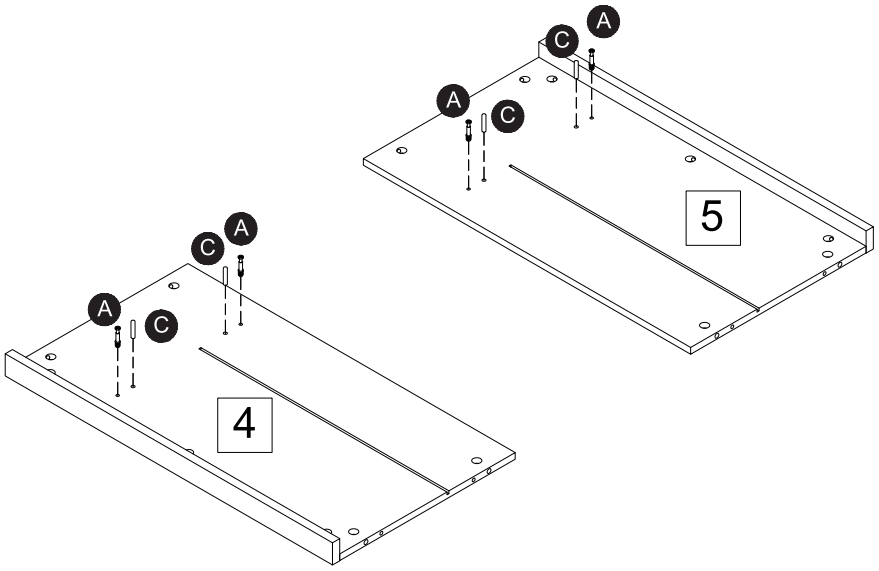

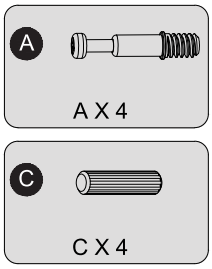

A. Install 2 cam lock screws (A) into Side Panel (4) and insert 2 wooden dowels (C).
B. Install 2 cam lock screws (A) into Side Panel (5) and insert 2 wooden dowels (C).

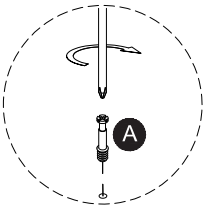

Step 6

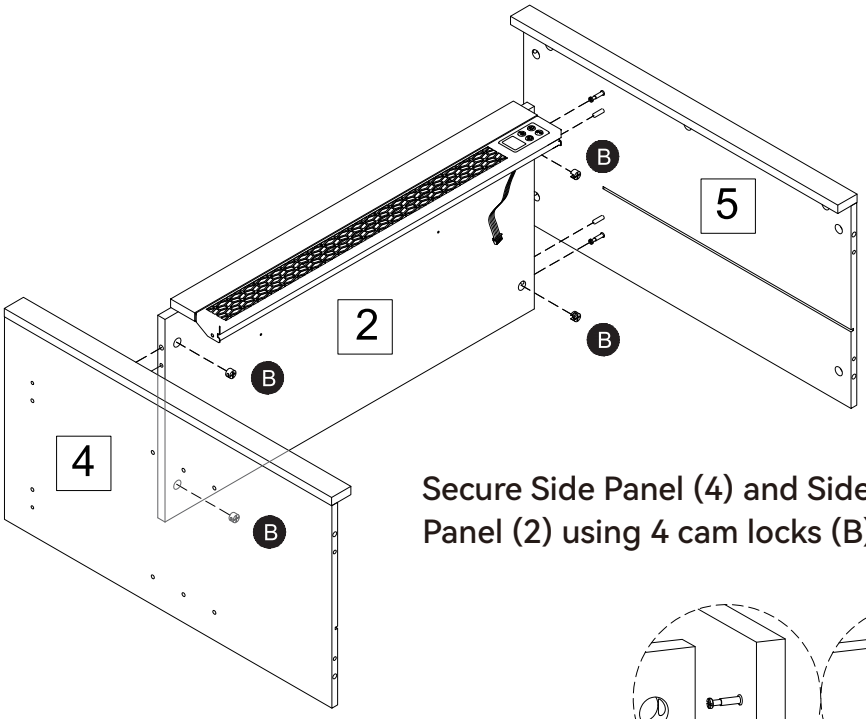

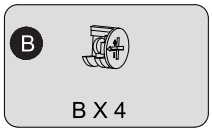

Secure Side Panel (4) and Side Panel (5) to the Shelf Panel (2) using 4 cam locks (B). Tighten securely.

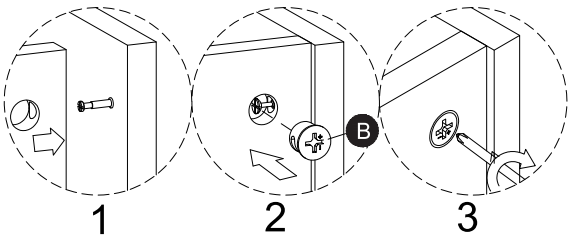

Assembly Instructions

Step 7

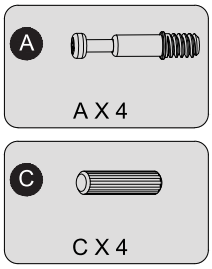

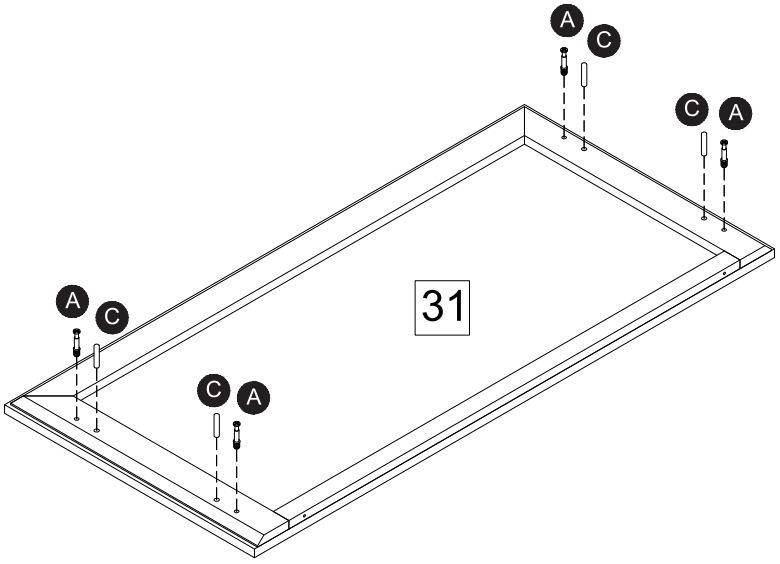

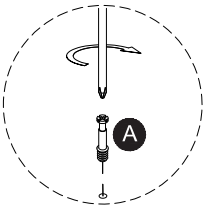

Install 4 cam lock screws (A) into the Top Panel (31), then insert 4 wooden dowels (C).

Step 8

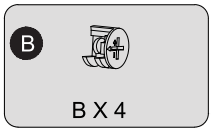

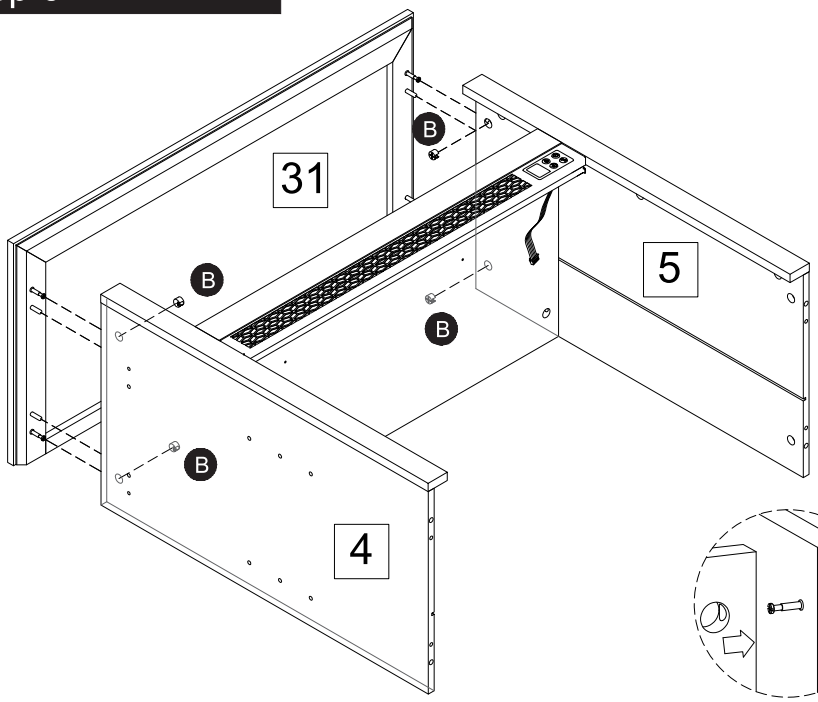

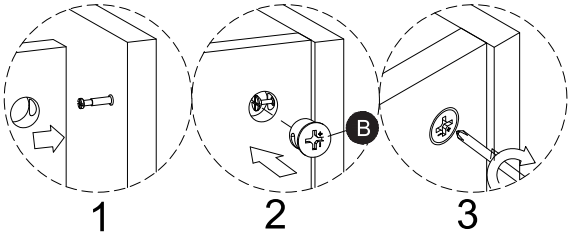

Secure the Top Panel (31) to Side Panel (4) and Side Panel (5) using 4 cam locks (B). Tighten securely.

Assembly Instructions

Step 9

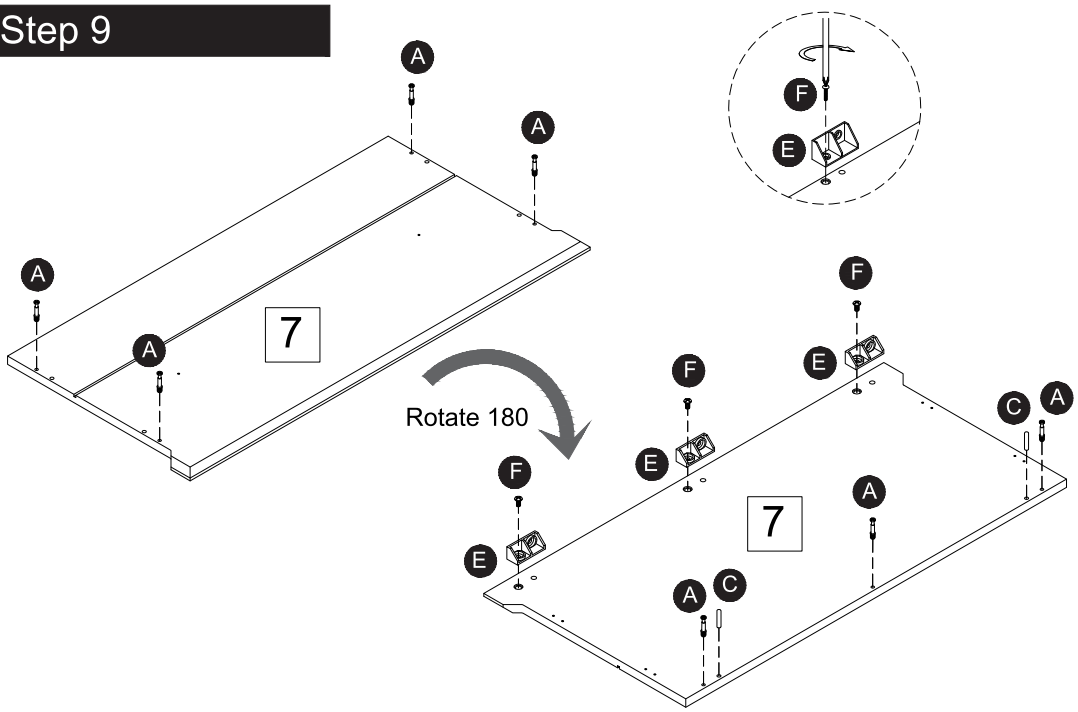

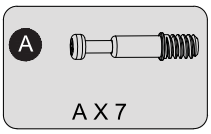

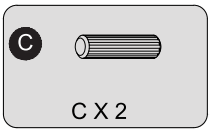

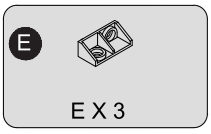

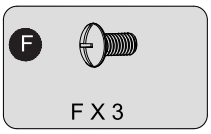

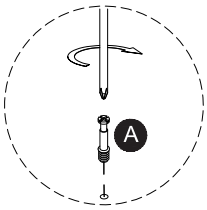

A. Install 4 cam lock screws (A) on one side of the Bottom Panel (7).
B. Turn the Bottom Panel (7) over, then attach 3 plastic fasteners (E) using 3 screws (F) on that side.
C. Install 3 cam lock screws (A) and insert 2 wooden dowels (C).

Step 10

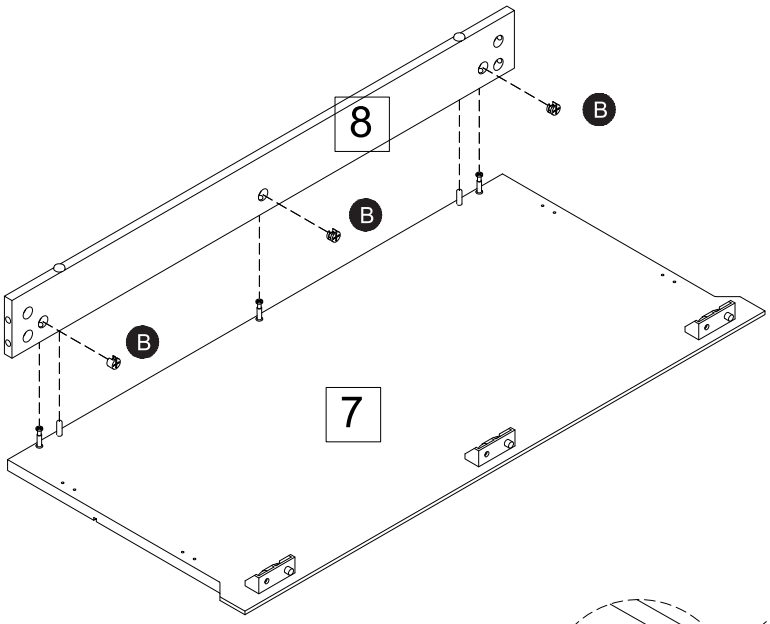

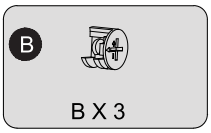

Secure the Back Rail (8) to the Bottom Panel (7) using 3 cam locks (B). Tighten securely.

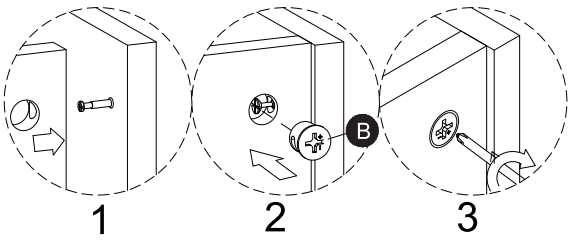

Assembly Instructions

Step 11

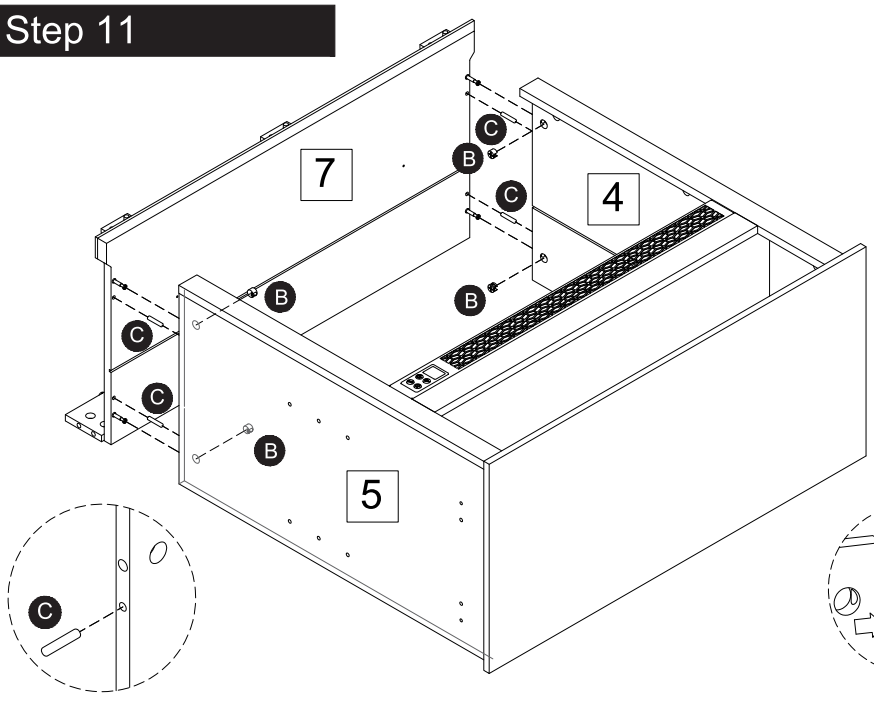

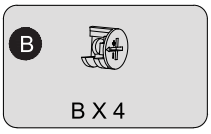

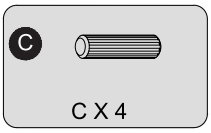

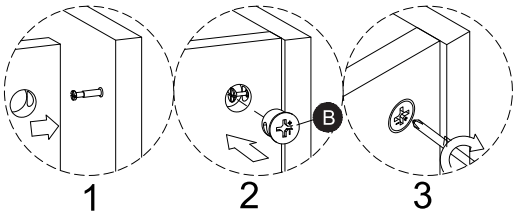

A. Insert 4 wooden dowels (C) into the corresponding holes on Side Panel (4) and Side Panel (5).
B. Secure the Bottom Panel (7) to Side Panel (4) and Side Panel (5) using 4 cam locks (B). Tighten securely.

Step 12

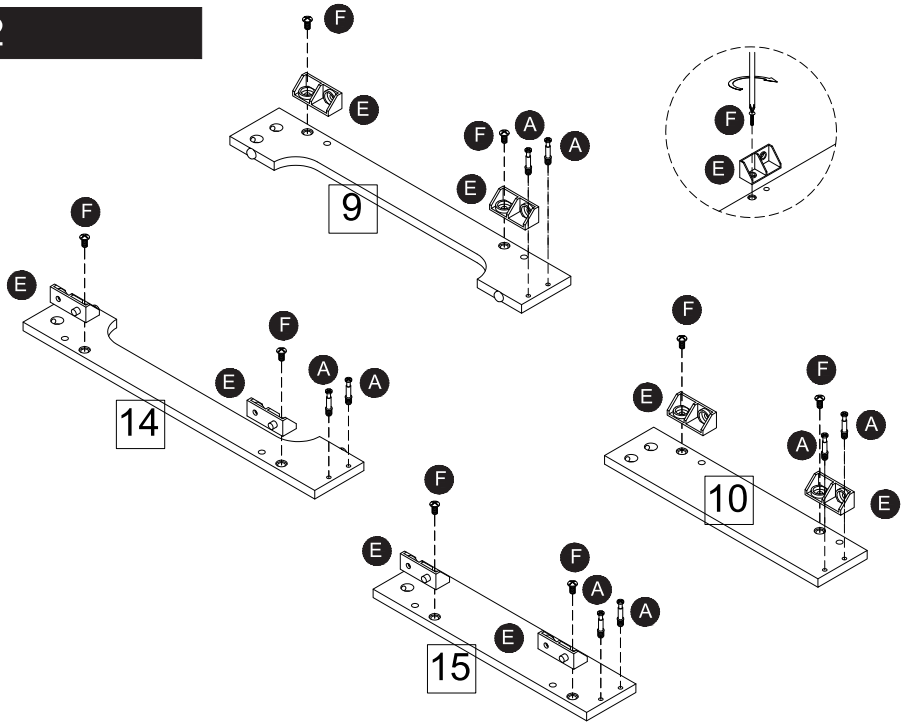

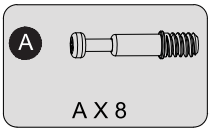

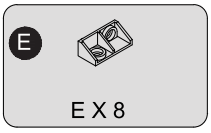

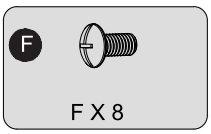

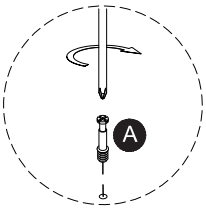

A. Attach 2 plastic fasteners (E) to the Front Support (9) using 2 screws (F), then install 2 cam lock screws (A).
B. Attach 2 plastic fasteners (E) to the Front Support (14) using 2 screws (F), then install 2 cam lock screws (A).
C. Attach 2 plastic fasteners (E) to the Side Support (10) using 2 screws (F), then install 2 cam lock screws (A).
D. Attach 2 plastic fasteners (E) to the Side Support (15) using 2 screws (F), then install 2 cam lock screws (A).

Assembly Instructions

Step 13

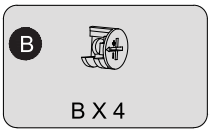

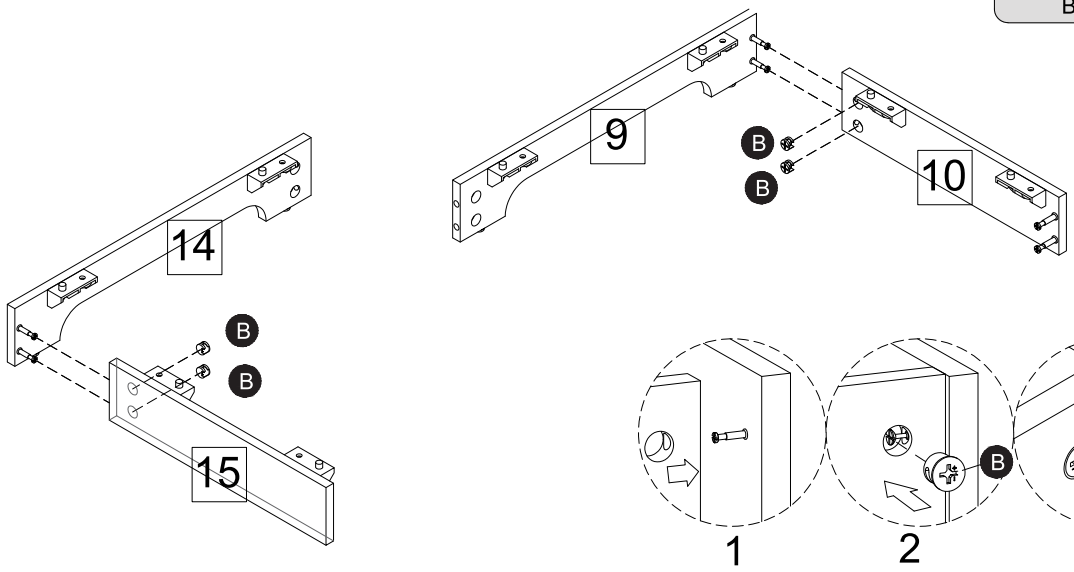

A. Secure the Side Support (10) to the Front Support (9) using 2 cam locks (B). Tighten securely.
B. Secure the Side Support (15) to the Front Support (14) using 2 cam locks (B). Tighten securely.

Step 14

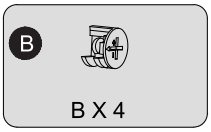

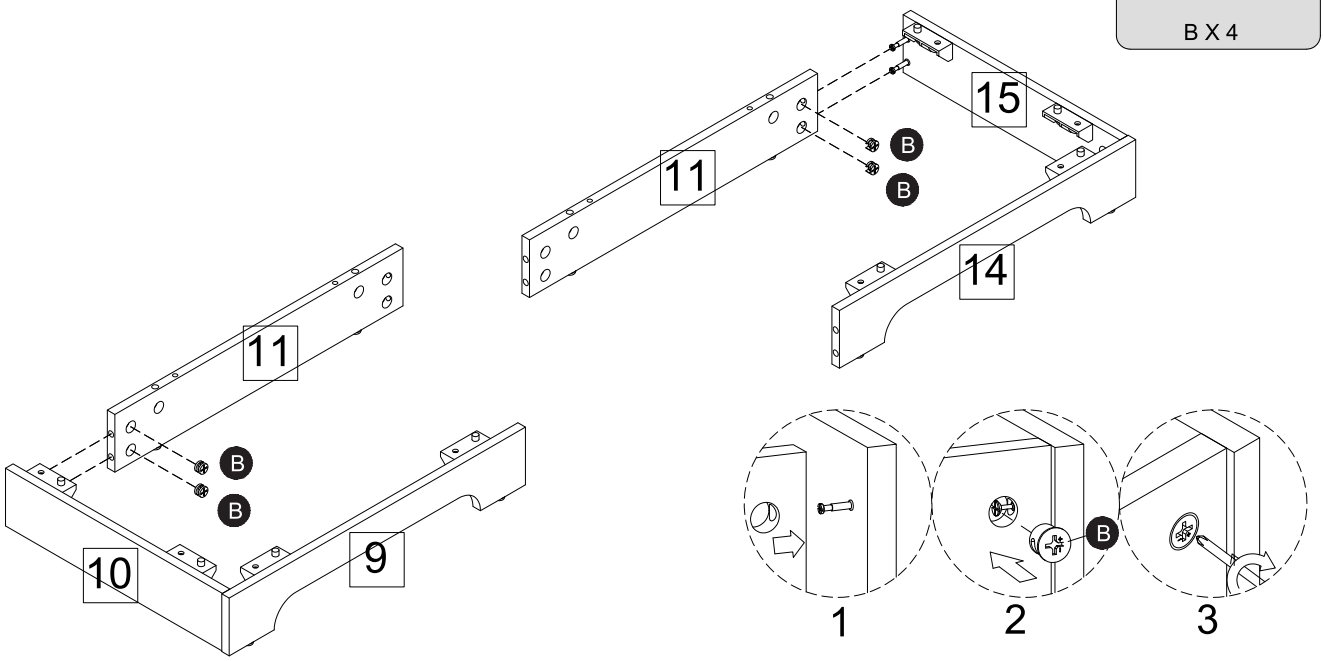

A. Secure the Back Support (11) to the Side Support (10) using 2 cam locks (B). Tighten securely.
B. Secure the Back Support (11) to the Side Support (15) using 2 cam locks (B). Tighten securely.

Assembly Instructions

Step 15

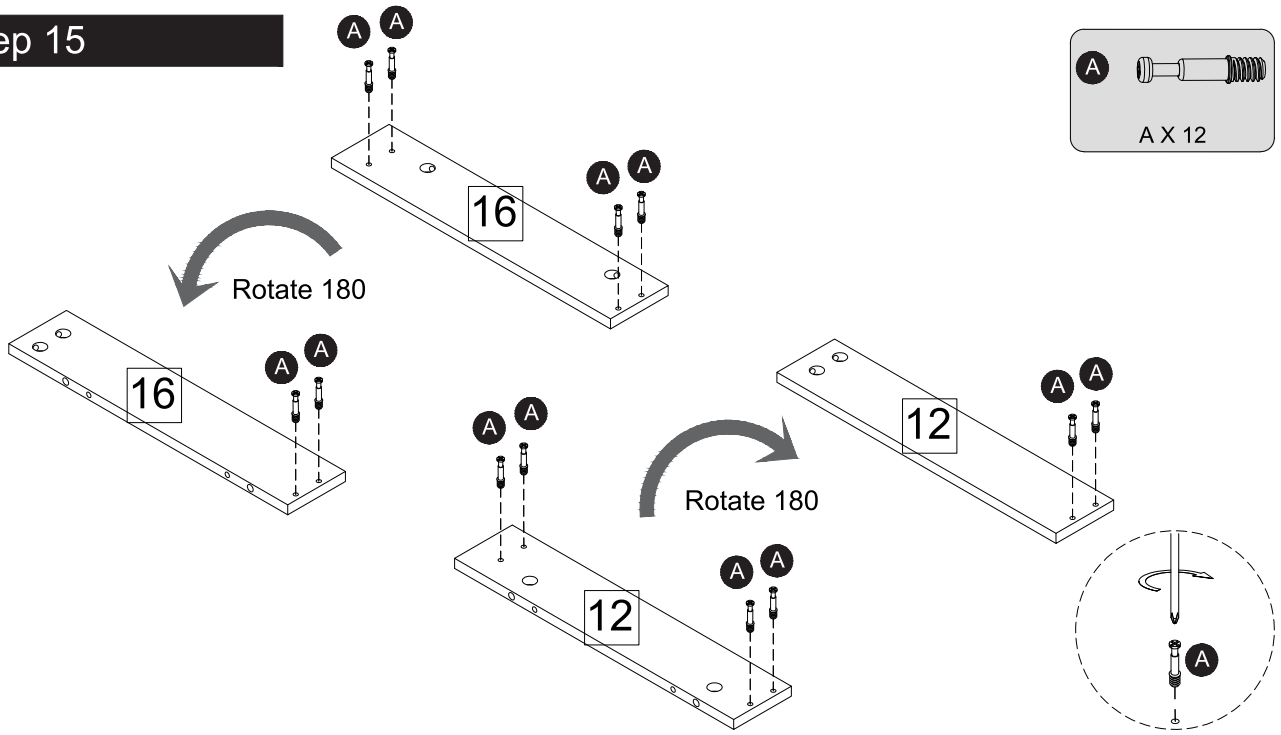

A. Install 4 cam lock screws (A) on one side of the Center Support (16), then turn it over and install 2 cam lock screws (A) on the other side.

B. Install 4 cam lock screws (A) on one side of the Center Support (12), then turn it over and install 2 cam lock screws (A) on the other side.

Step 16

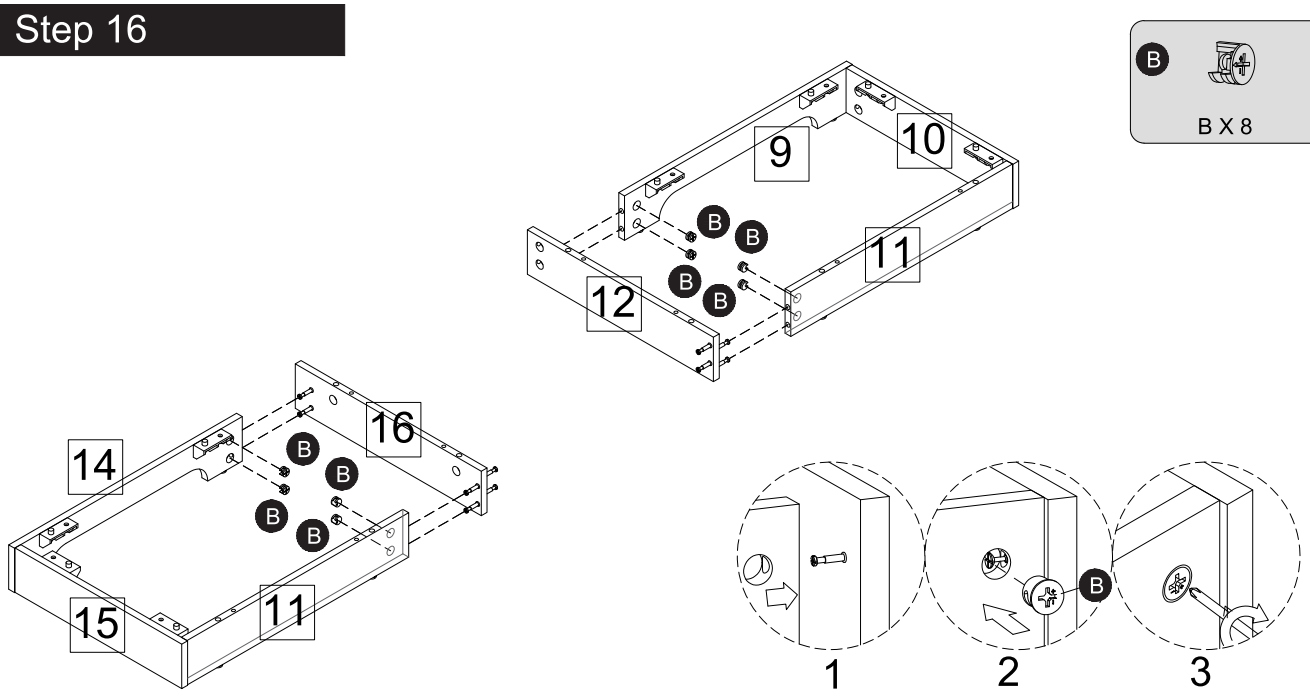

A. Secure the Center Support (12) to the Front Support (9) and Back Support (11) using 4 cam locks (B). Tighten securely.

B. Secure the Center Support (16) to the Front Support (14) and Back Support (11) using 4 cam locks (B). Tighten securely.

Assembly Instructions

Step 17

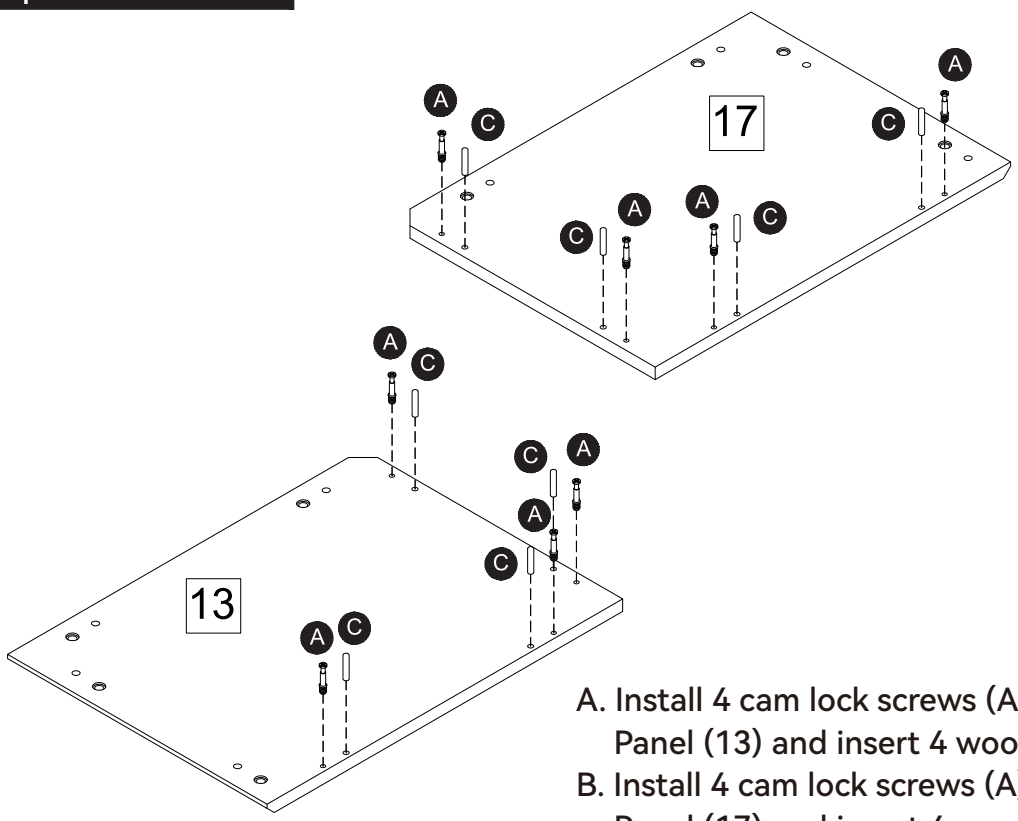

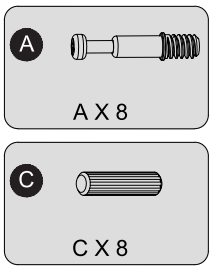

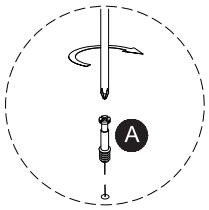

A. Install 4 cam lock screws (A) into the Bottom Panel (13) and insert 4 wooden dowels (C).
B. Install 4 cam lock screws (A) into the Bottom Panel (17) and insert 4 wooden dowels (C).

Step 18

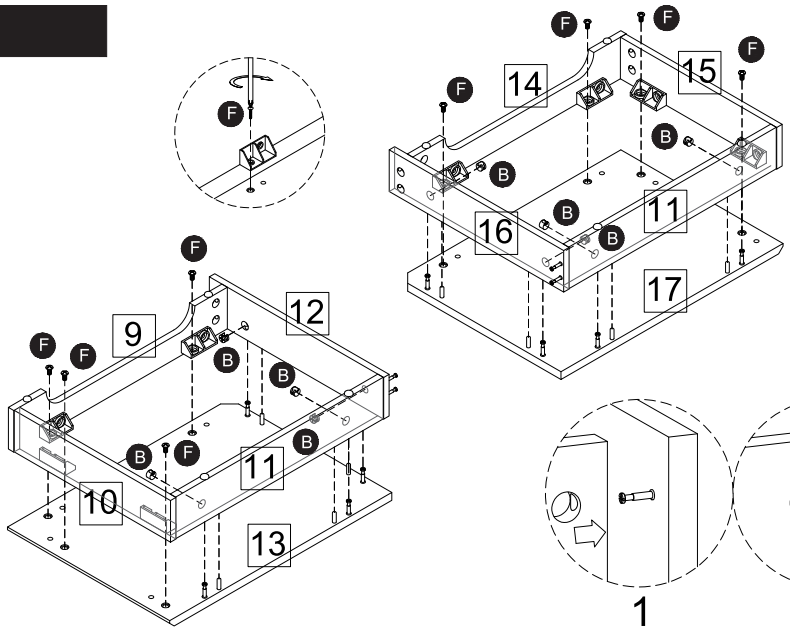

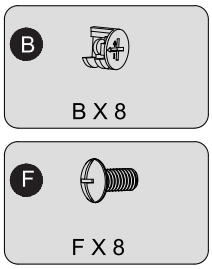

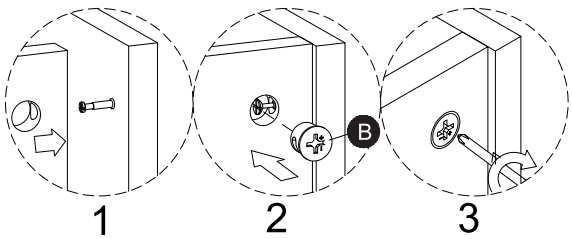

A. Secure Supports (11) and (12) to the Bottom Panel (13) using 4 cam locks (B).
B. Secure the Front Support (9) and Side Support (10) to the Bottom Panel (13) by inserting 4 screws (F) through the plastic fasteners (E).
C. Secure Supports (11) and (16) to the Bottom Panel (17) using 4 cam locks (B).
D. Secure the Front Support (14) and Side Support (15) to the Bottom Panel (17) by inserting 4 screws (F) through the plastic fasteners (E).

Assembly Instructions

Step 19

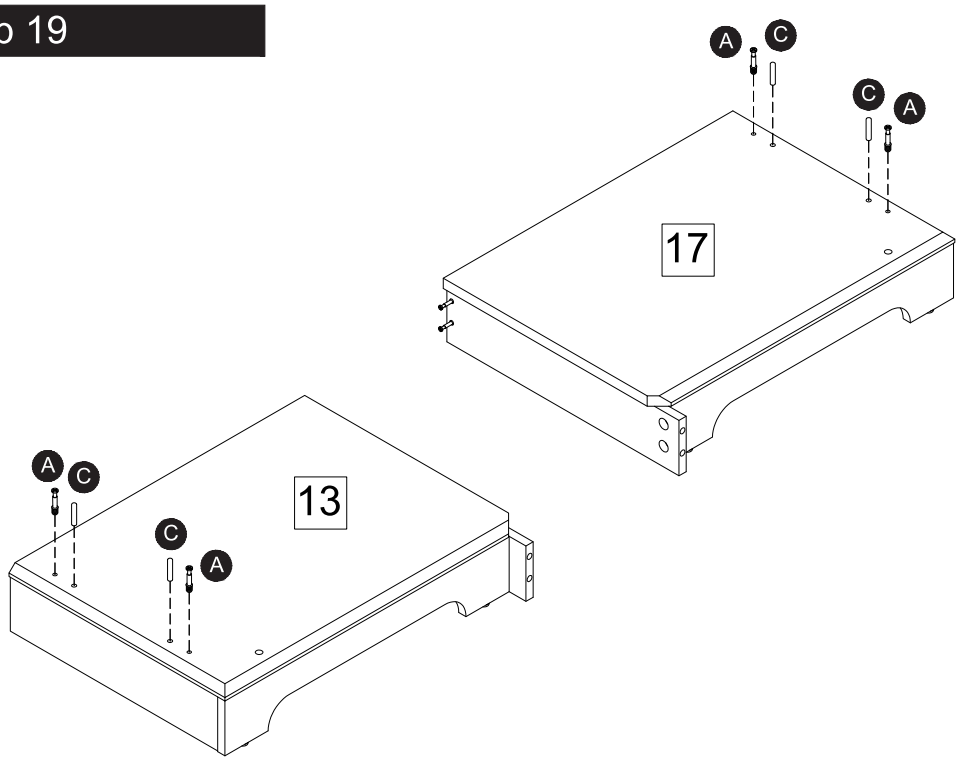

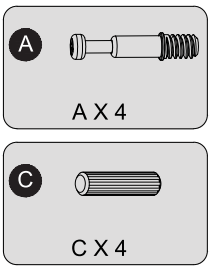

A. Install 2 cam lock screws (A) into the Bottom Panel (13), then insert 2 wooden dowels (C).
B. Install 2 cam lock screws (A) into the Bottom Panel (17), then insert 2 wooden dowels (C).

Step 20

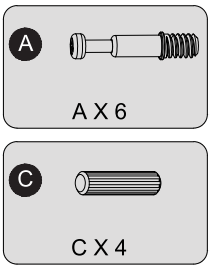

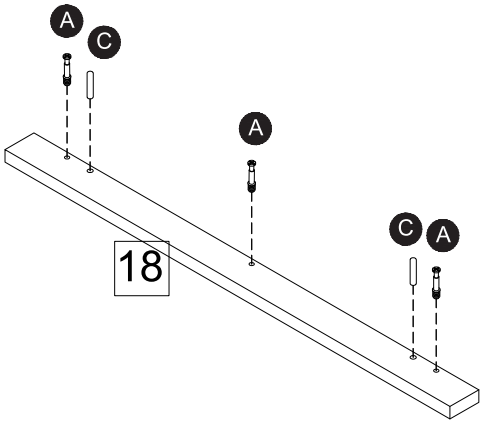

X 2

For each Front Side Rail (18) (2 pieces total), install 3 cam lock screws (A) and insert 2 wooden dowels (C).

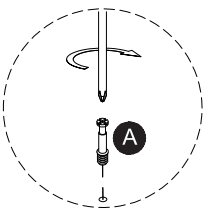

Assembly Instructions

Step 21

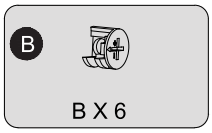

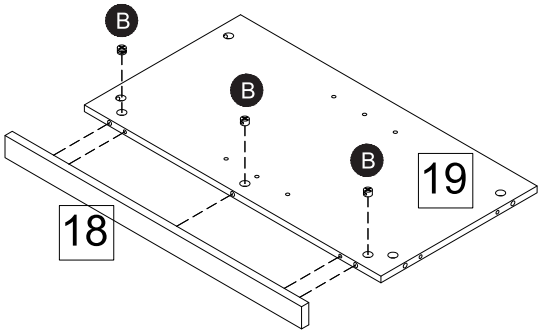

X 2

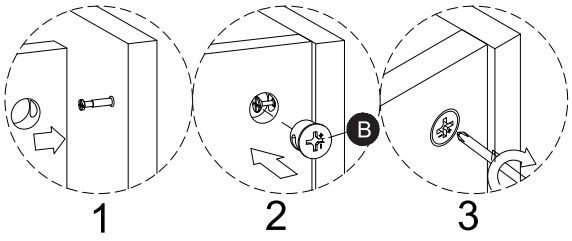

Secure each Front Side Rail (18) to a Side Panel (19) using 3 cam locks (B). Tighten securely. (2 sets total)

Step 22

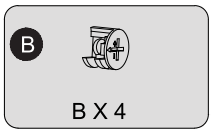

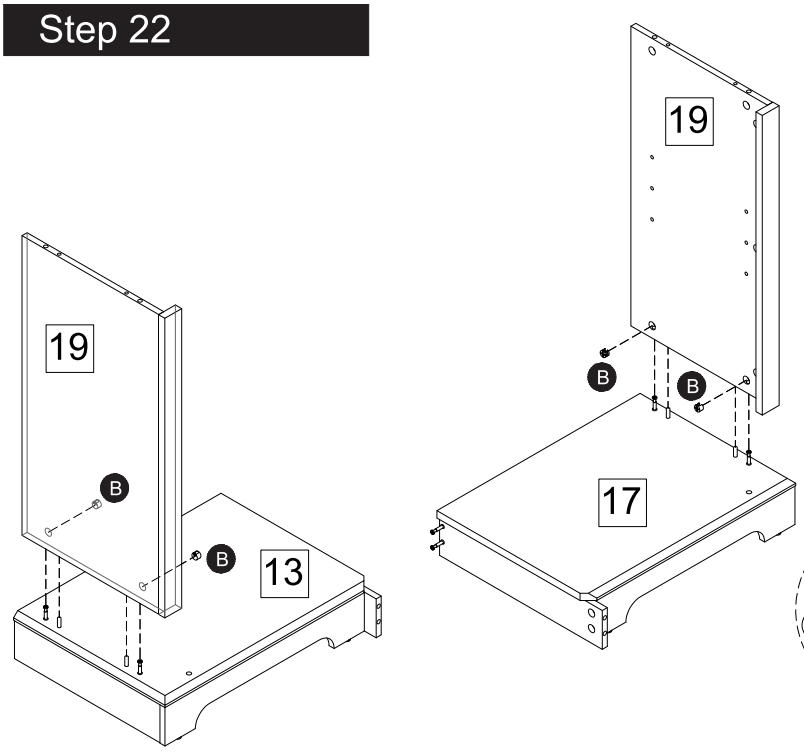

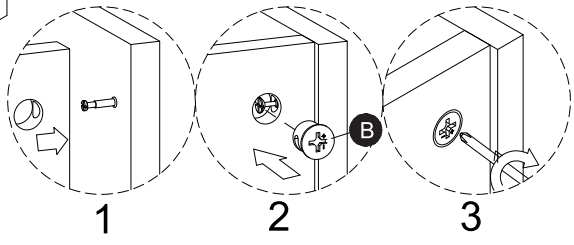

A. Secure one Side Panel (19) to the Bottom Panel (13) using 2 cam locks (B). Tighten securely.
B. Secure the other Side Panel (19) to the Bottom Panel (17) using 2 cam locks (B). Tighten securely.

Assembly Instructions

Step 23

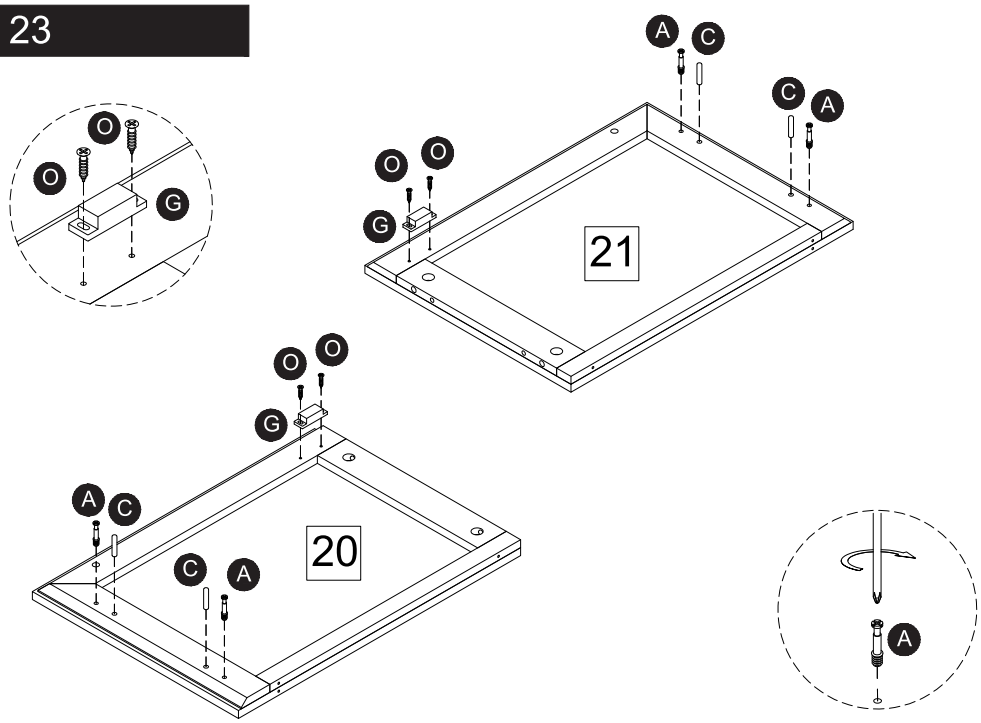

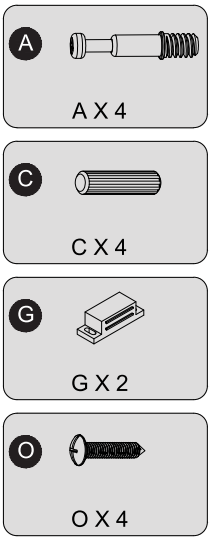

A. Attach 1 magnetic catch (G) to the Panel (20) using 2 screws (O), then install 2 cam lock screws (A) and insert 2 wooden dowels (C).
B. Attach 1 magnetic catch (G) to the Panel (21) using 2 screws (O), then install 2 cam lock screws (A) and insert 2 wooden dowels (C).

Step 24

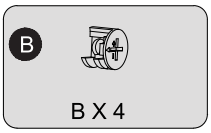

A. Secure the Panel (20) to the Side Panel (19) using 2 cam locks (B). Tighten securely.
B. Secure the Panel (21) to the Side Panel (19) using 2 cam locks (B). Tighten securely.

Assembly Instructions

Step 25

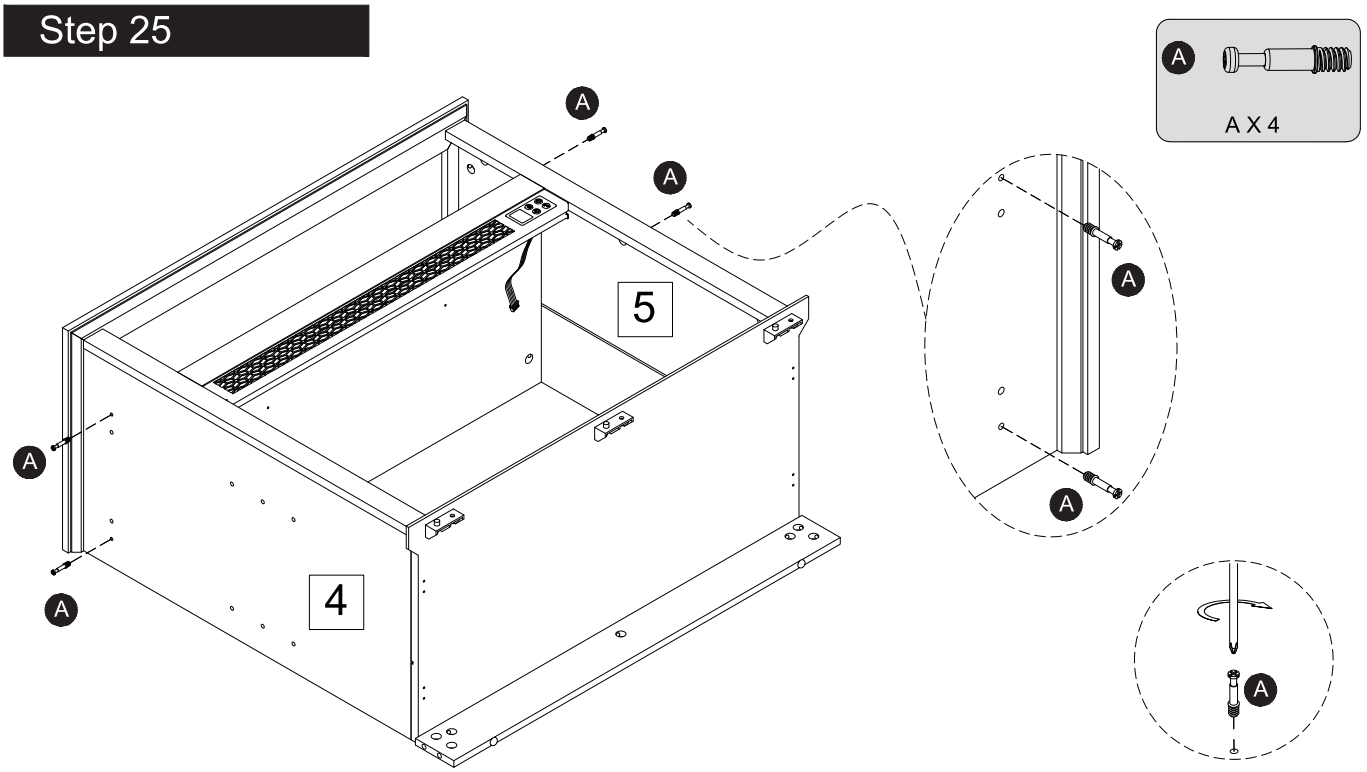

Install 2 cam lock screws (A) into each of the Side Panel (4) and Side Panel (5).

Step 26

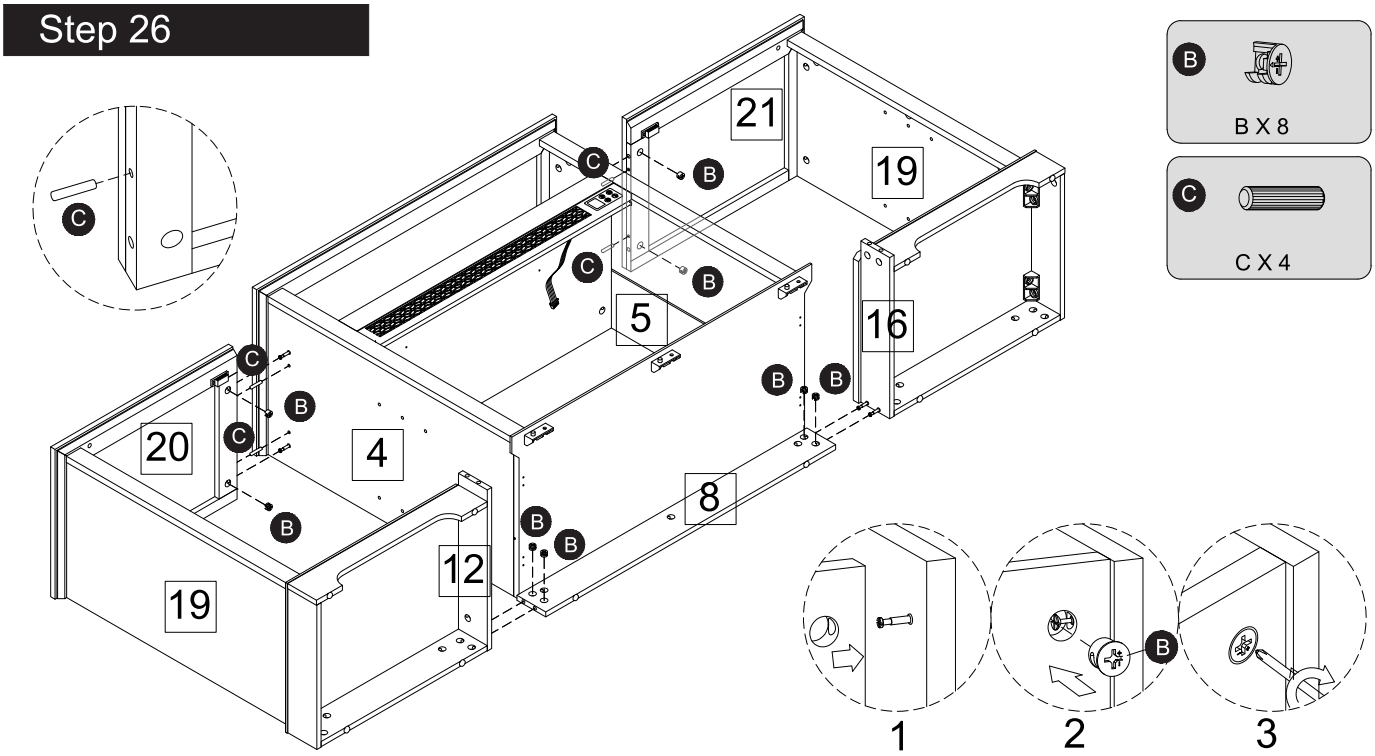

A. Insert 2 wooden dowels (C) into the Panel (20), then secure it to the Side Panel (4) using 2 cam locks (B).
B. Secure the Center Support (12) to the Back Support (8) using 2 cam locks (B).
C. Insert 2 wooden dowels (C) into the Panel (21), then secure it to the Side Panel (5) using 2 cam locks (B).
D. Secure the Center Support (16) to the Back Support (8) using 2 cam locks (B).

Assembly Instructions

Step 27

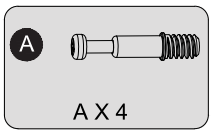

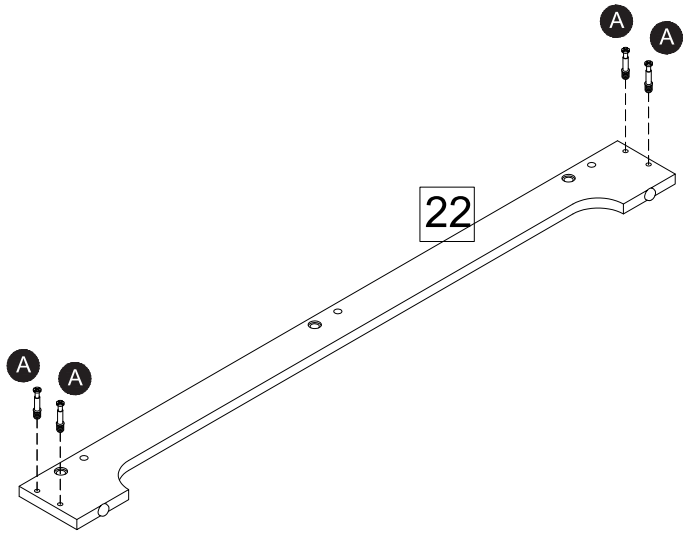

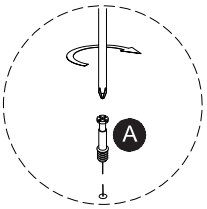

Install 4 cam lock screws (A) into the Front Support (22).

Step 28

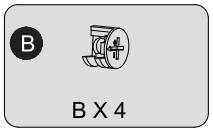

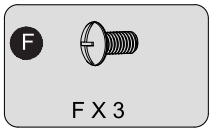

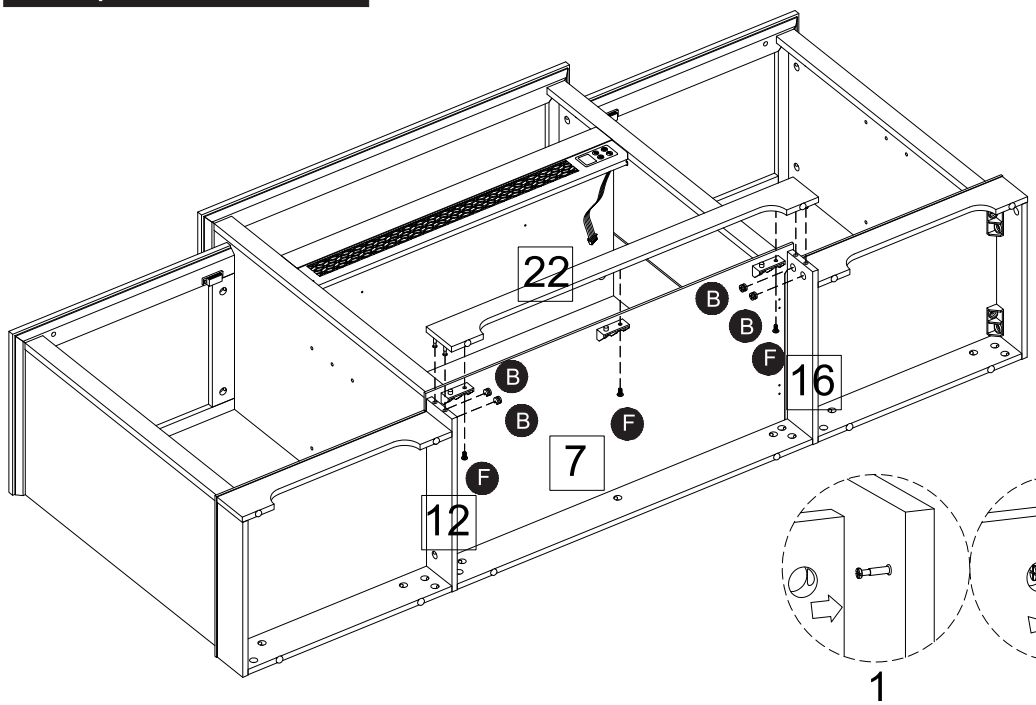

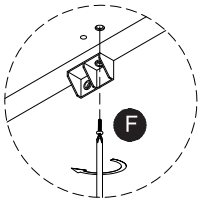

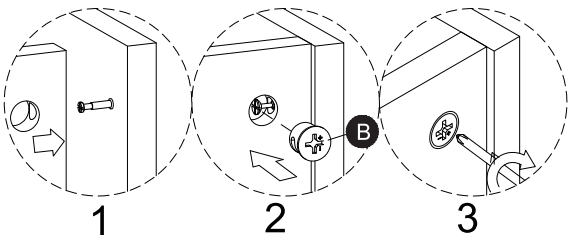

A. Secure the Front Support (22) to the Center Supports (12) and (16) using 4 cam locks (B). Tighten securely.

B. Secure the Front Support (22) by inserting 3 screws (F) through the plastic fasteners (E).

Assembly Instructions

Step 29

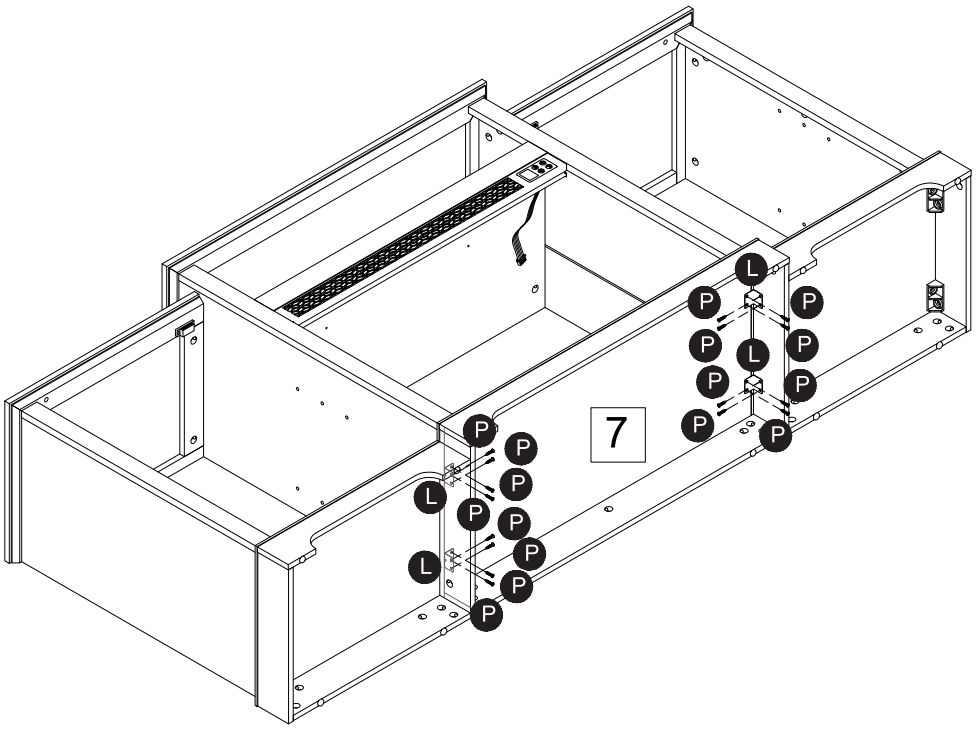

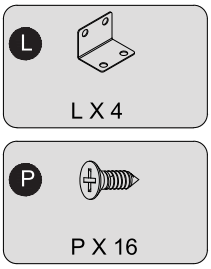

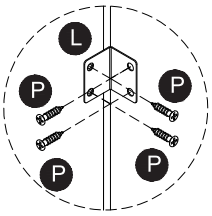

Attach 4 metal brackets (L) to the Bottom Panel (7) and the Center Supports using 16 screws (P).

Step 30

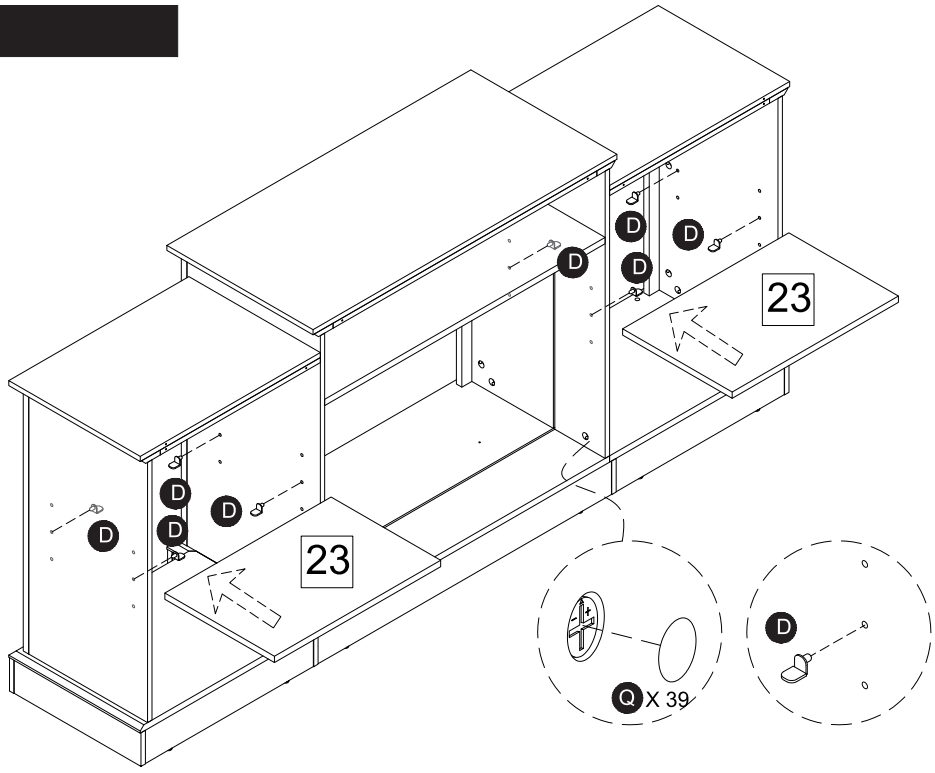

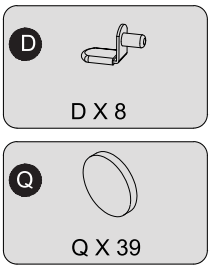

A. Insert 8 shelf pins (D) into Side Panel (4), Side Panel (5), and Side Panel (19), then place 2 shelves (23) on top.
B. Cover the cam lock holes with 39 cover stickers (Q).

Assembly Instructions

Step 31

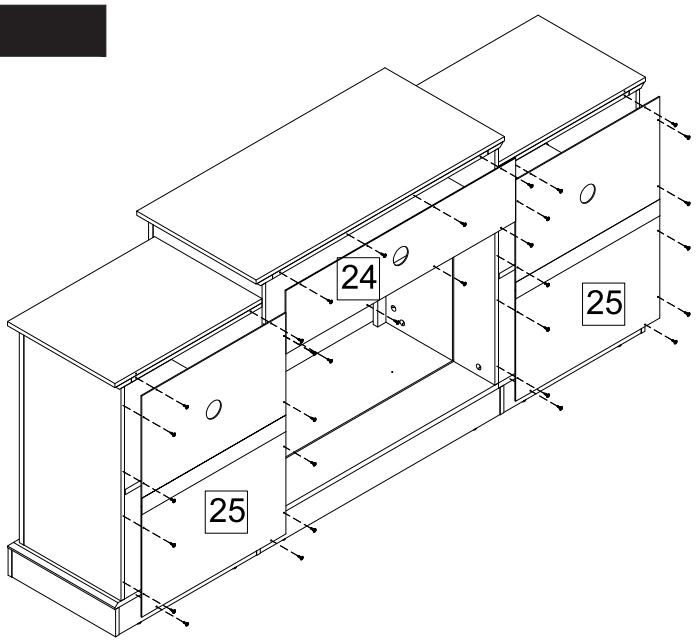

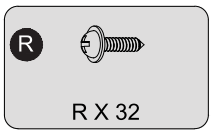

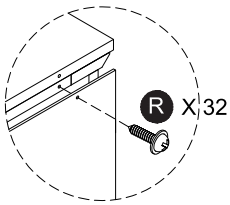

A. Attach the Back Panel (25) to the rear of the cabinet using 12 screws (R), securing it to the corresponding panels, side panels, and bottom panel.
B. Attach the Back Panel (24) to the rear of the cabinet using 8 screws (R), securing it to the corresponding panels, side panels, and shelf.
C. Attach the Back Panel (25) to the rear of the cabinet using 12 screws (R), securing it to the corresponding panels, side panels, and bottom panel.

Step 32

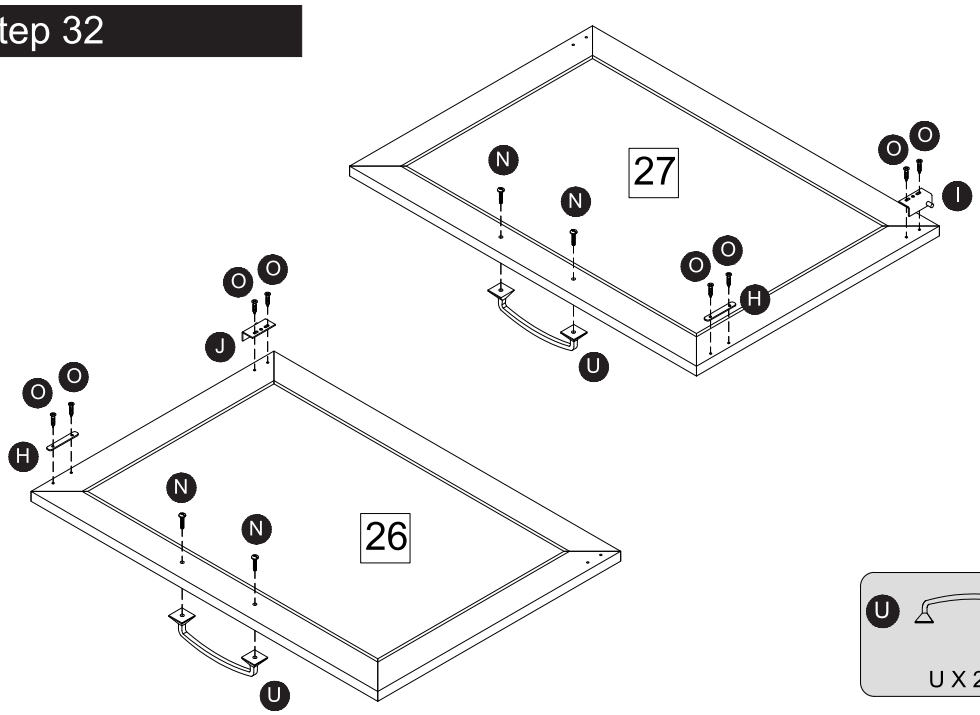

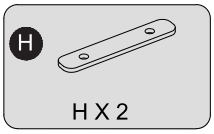

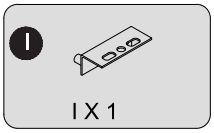

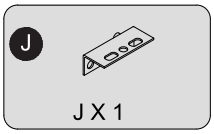

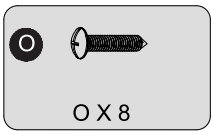

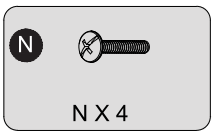

A. Attach the metal plate (H) to the Door Panel (26) using 2 screws (O), then attach the pivot hinge (J) using 2 screws (O), and attach the handle (U) using 2 screws (N).
B. Attach the metal plate (H) to the Door Panel (27) using 2 screws (O), then attach the pivot hinge (I) using 2 screws (O), and attach the handle (U) using 2 screws (N).

Assembly Instructions

Step 33

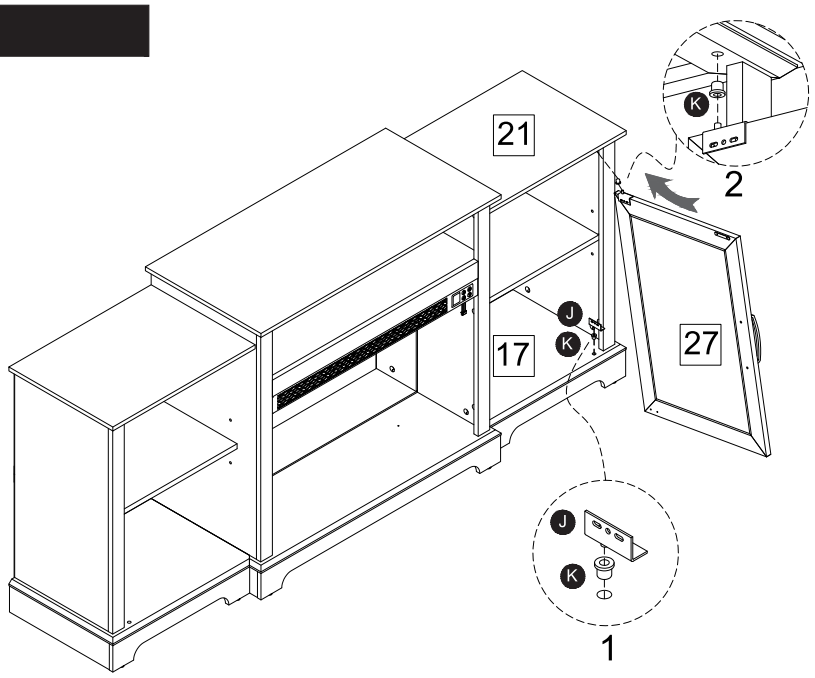

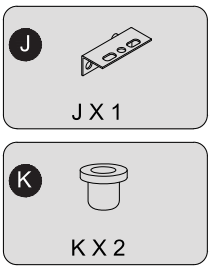

A. Insert 1 pivot sleeve (K) into the pre-drilled hole on the Bottom Panel (17), then align and insert the pivot of hinge (J) into the sleeve.
B. Insert 1 pivot sleeve (K) into the hinge on the Door Panel (27), then align the pivot end with the hole on Panel (21) and insert it into place.
C. Position the bottom of the Door Panel (27) onto the pivot hinge (J) on the bottom panel.

Step 34

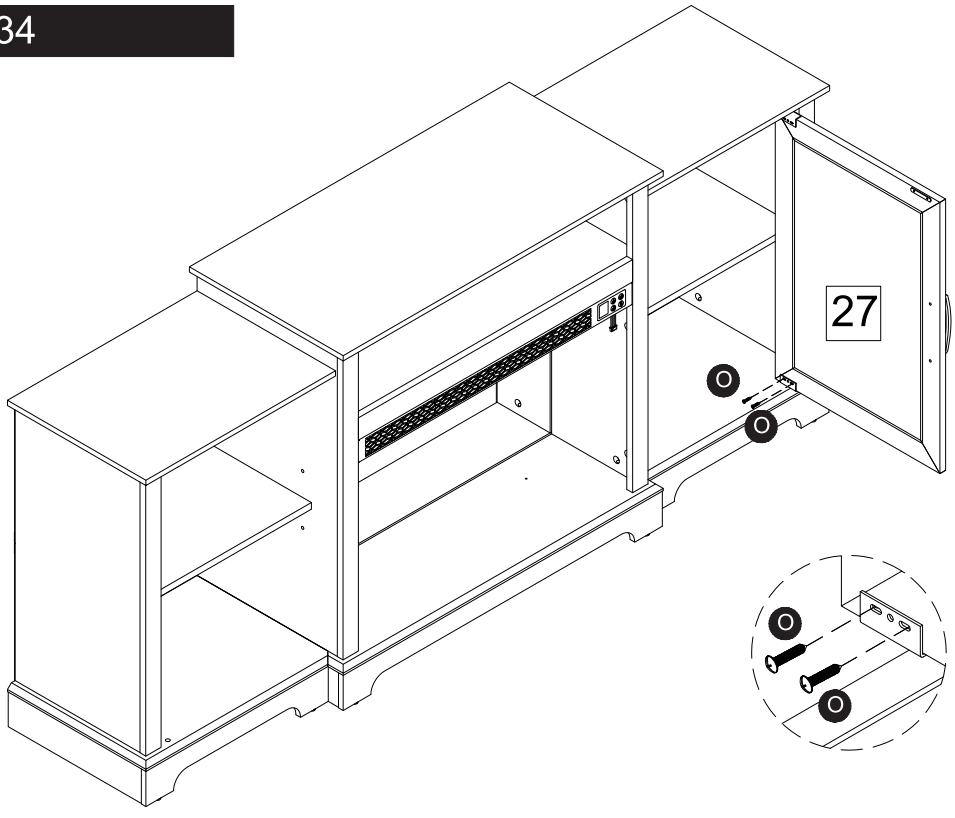

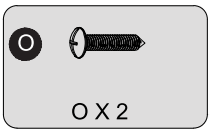

Attach the pivot hinge (J) to the Door Panel (27) using 2 screws (O).

Assembly Instructions

Step 35

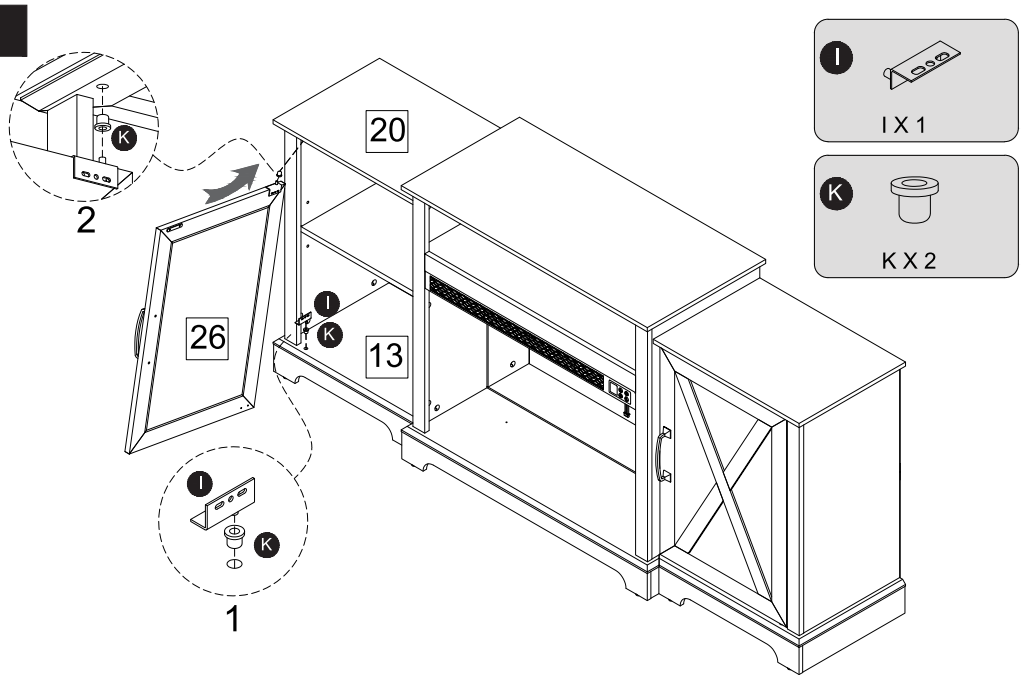

A. Insert 1 pivot sleeve (K) into the pre-drilled hole on the Bottom Panel (13), then align and insert the pivot of hinge (I) into the sleeve.
B. Insert 1 pivot sleeve (K) into the hinge on the Door Panel (26), then align the pivot end with the hole on Panel (20) and insert it into place.
C. Position the bottom of the Door Panel (26) onto the pivot hinge (I) on the bottom panel.

Step 36

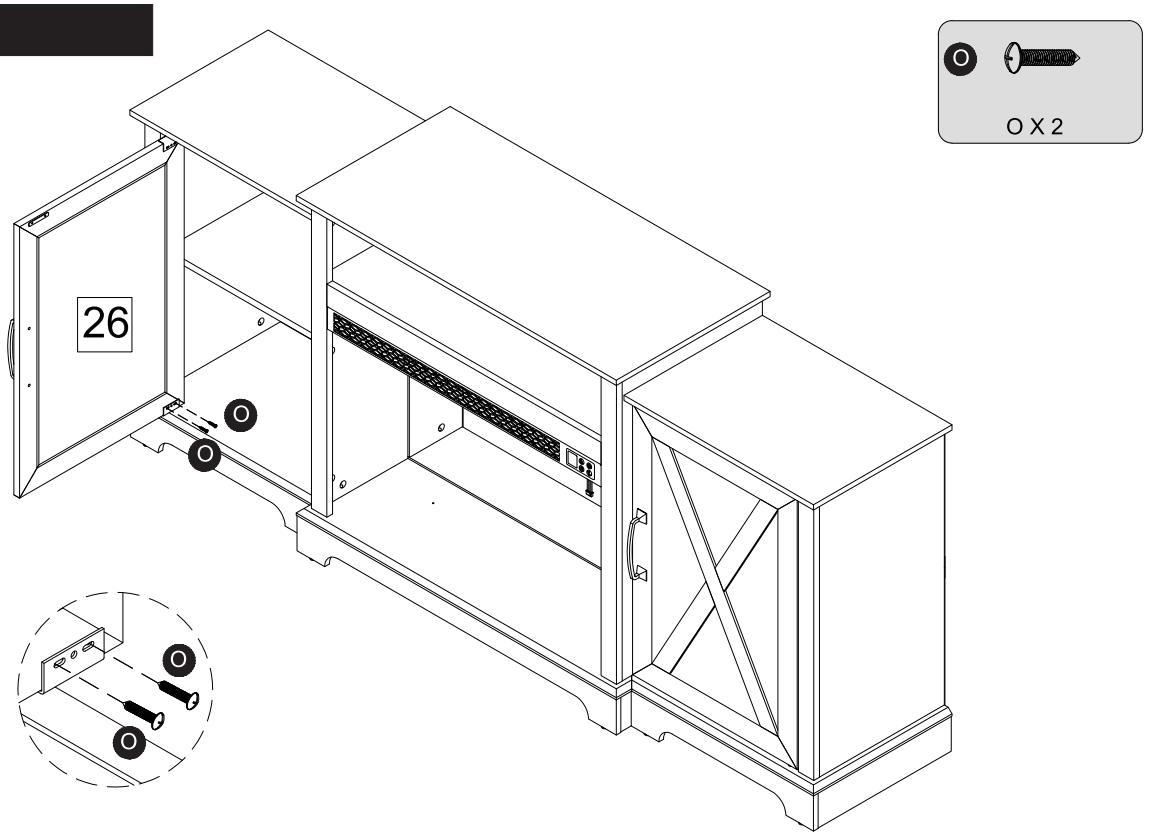

Attach the pivot hinge (I) to the Door Panel (26) using 2 screws (O).

Assembly Instructions

Step 37

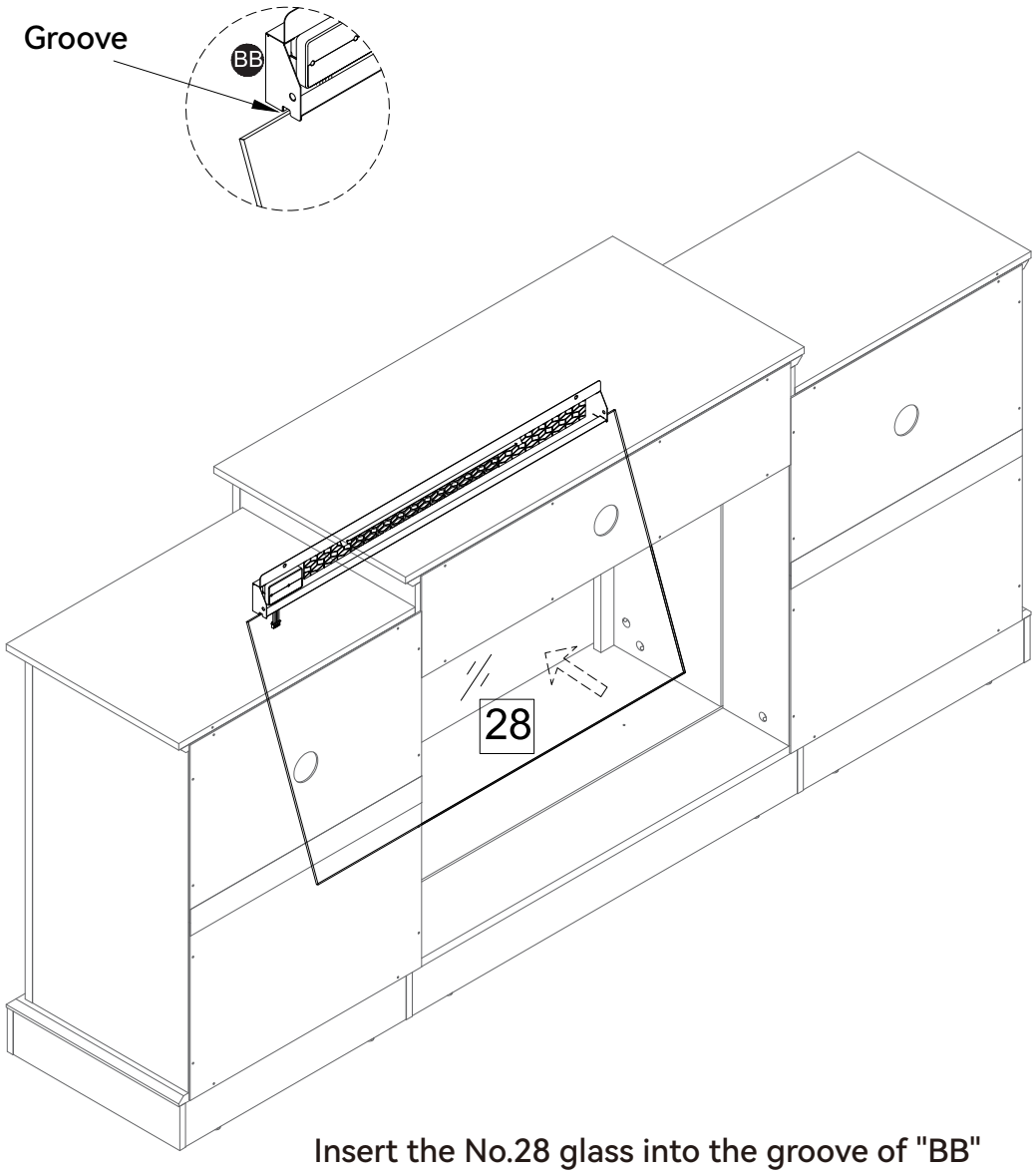

Insert the No.28 glass into the groove of "BB" and push it forward

Assembly Instructions

Step 38

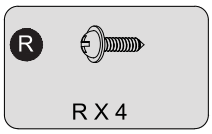

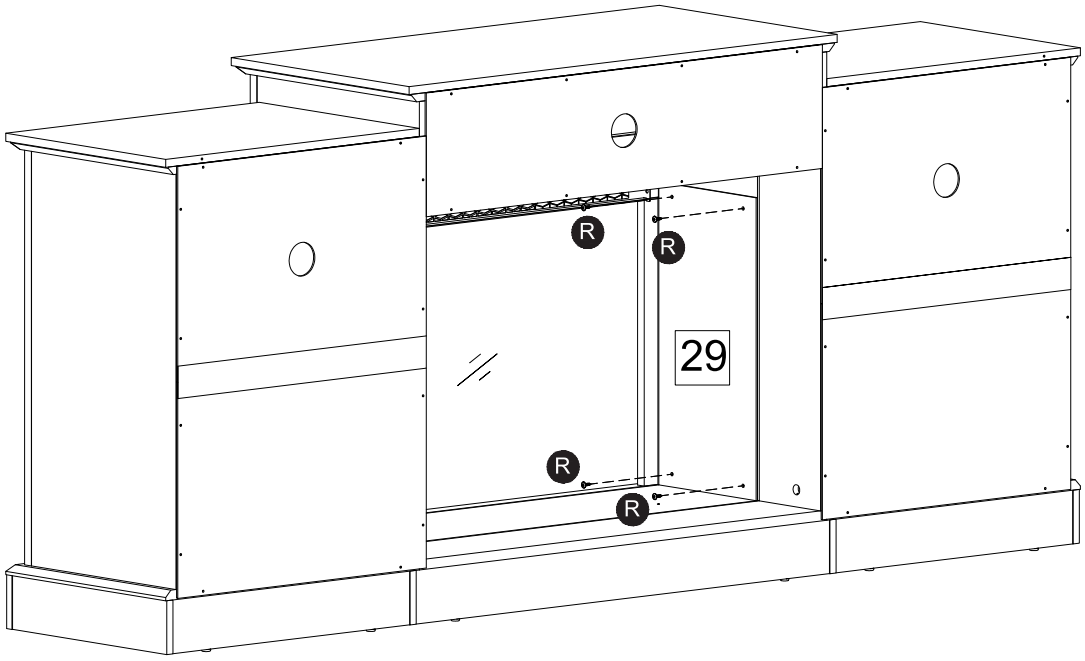

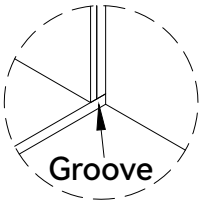

Position one side of the Fireplace Side Panel (29) against the Glass Panel (28), align the other side with the groove, then secure it to the Center Side Panel using 4 screws (R).

Step 39

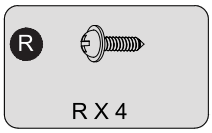

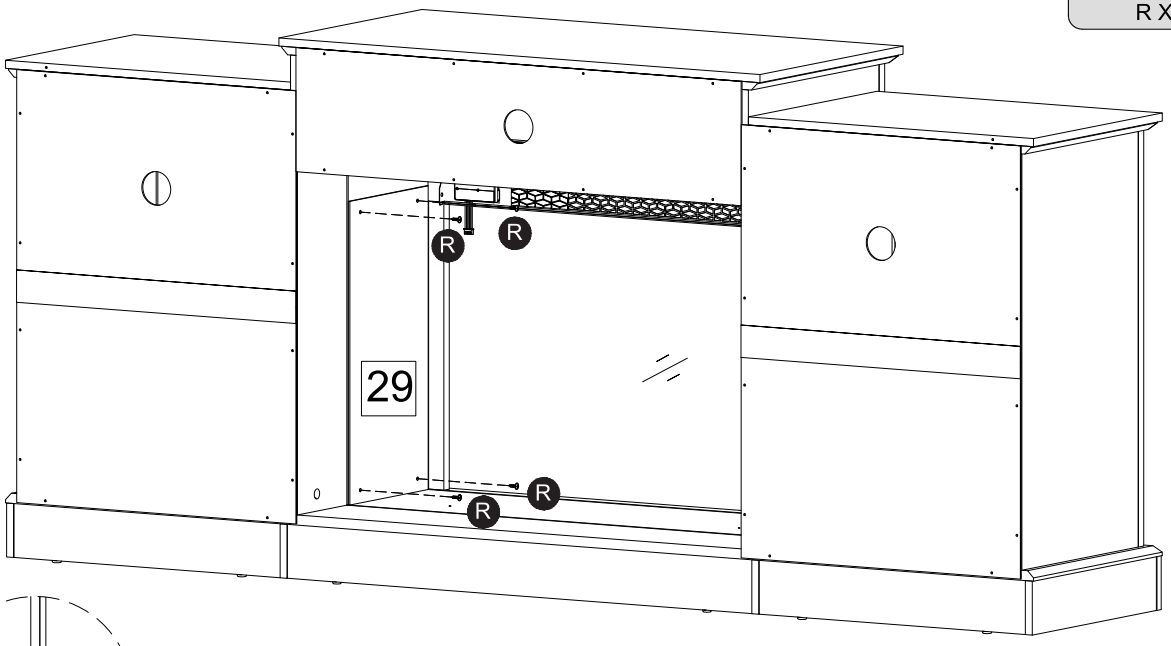

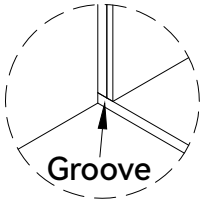

Align one side of the burner side panel (29) against the glass panel (28), and align the other side flush with the groove; then secure the burner side panel (29) to the center side panel using four screws (R).

Assembly Instructions

Step 40

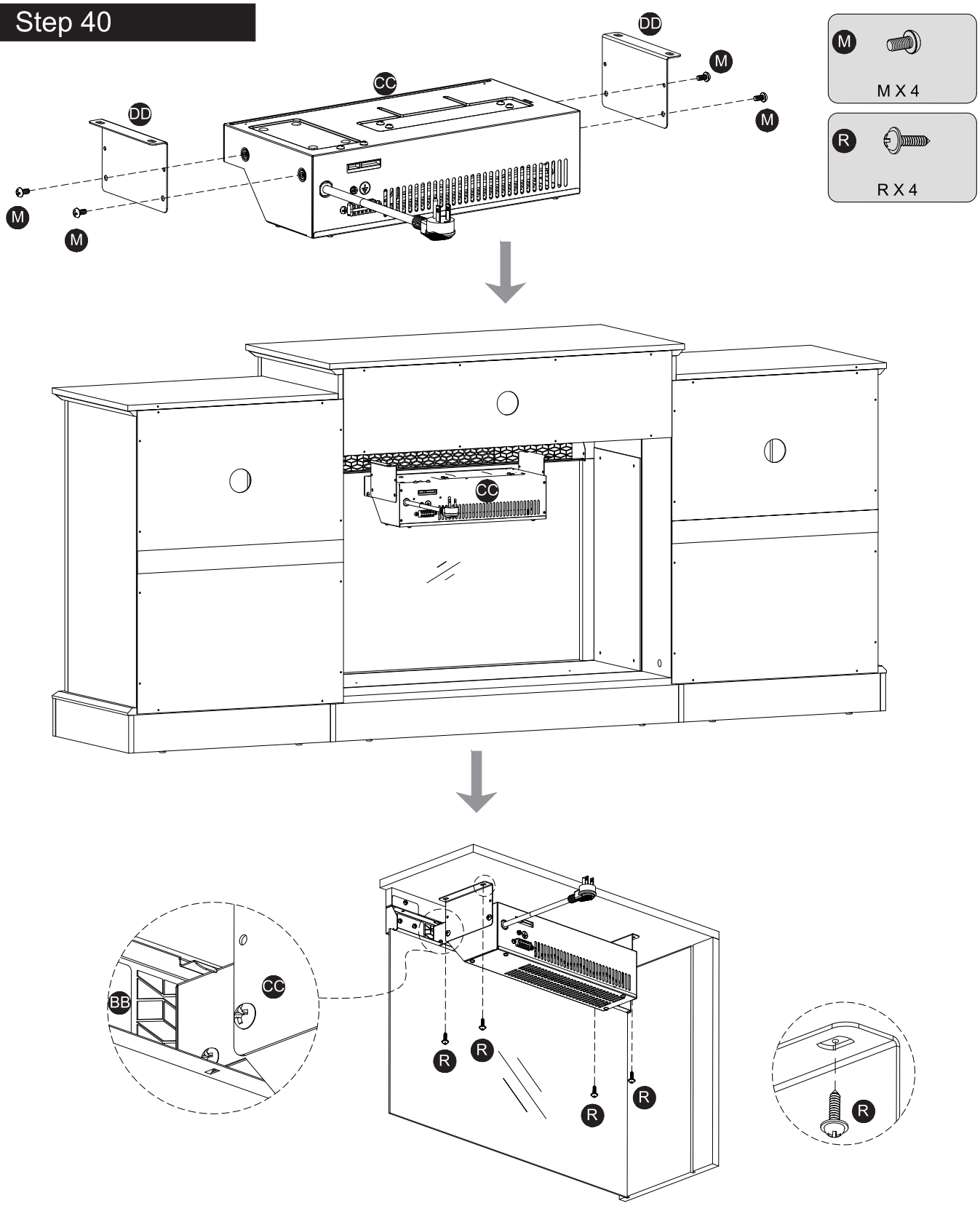

A. Attach the mounting brackets (DD) to the Fireplace Insert (CC) using 4 screws (M).
B. Insert the front air outlet of the Fireplace Insert (CC) into the Fireplace Front Frame (BB), then secure it with 4 screws (R).

Assembly Instructions

Step 41

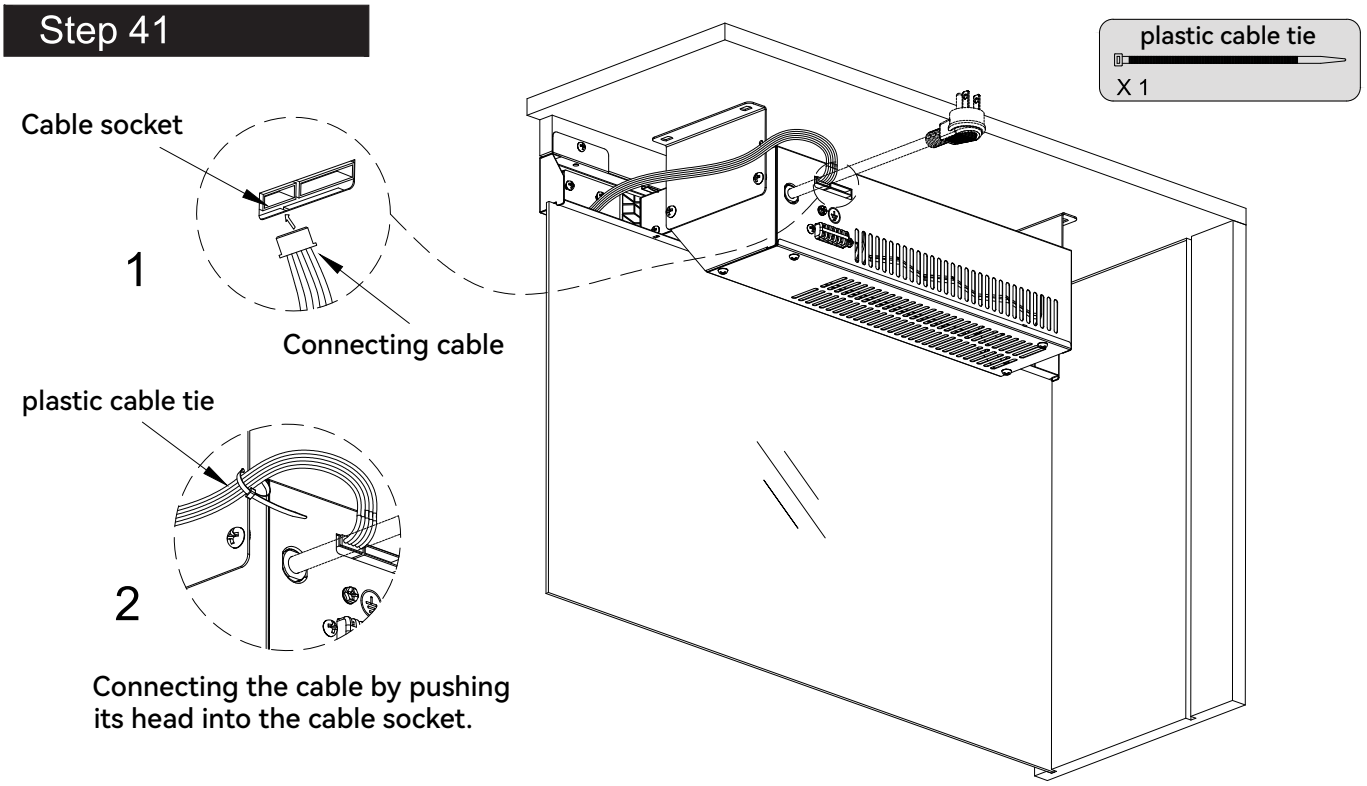

Connect the control panel wire from the Fireplace Front Frame (BB) to the socket on the Fireplace Insert (CC), and secure it to the mounting bracket (DD) using a cable tie.

Step 42

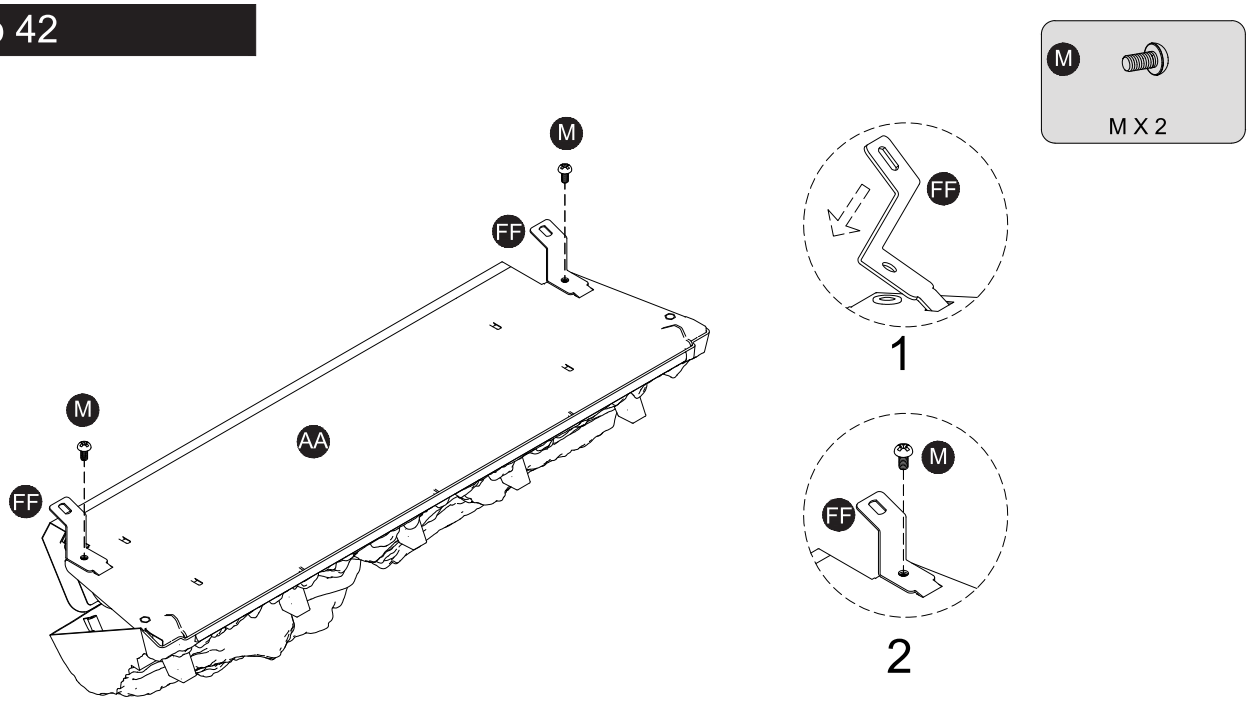

Insert 2 metal plates (FF) into the holes of the Logset Assembly (AA) and secure them using 2 screws (M).

Assembly Instructions

Step 43

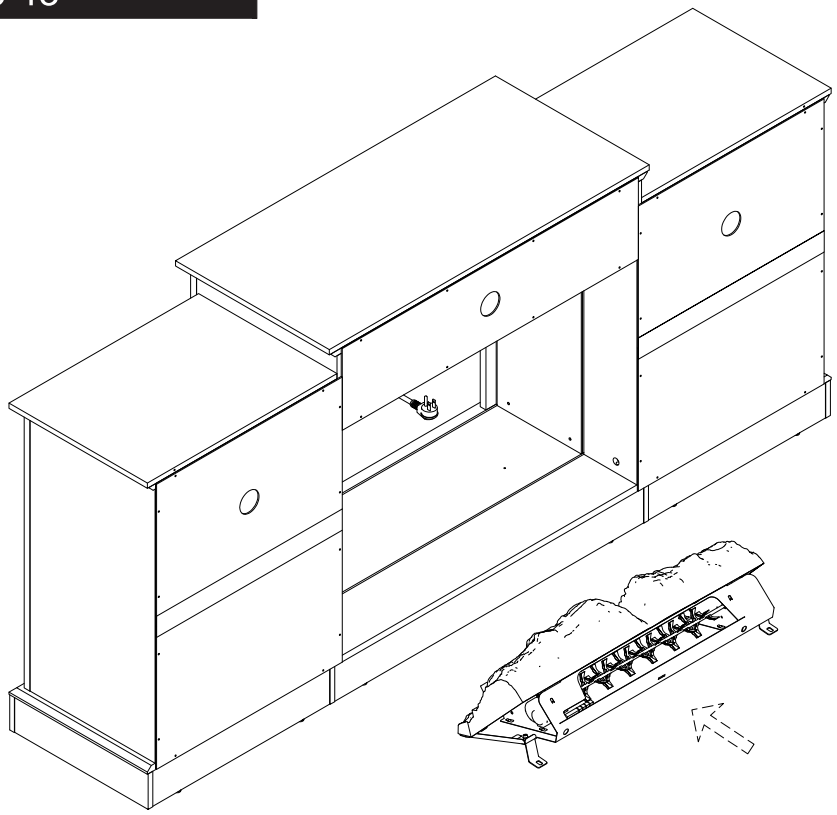

Place the Logset Assembly (AA) with the front side positioned against the glass.

Step 44

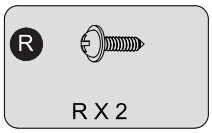

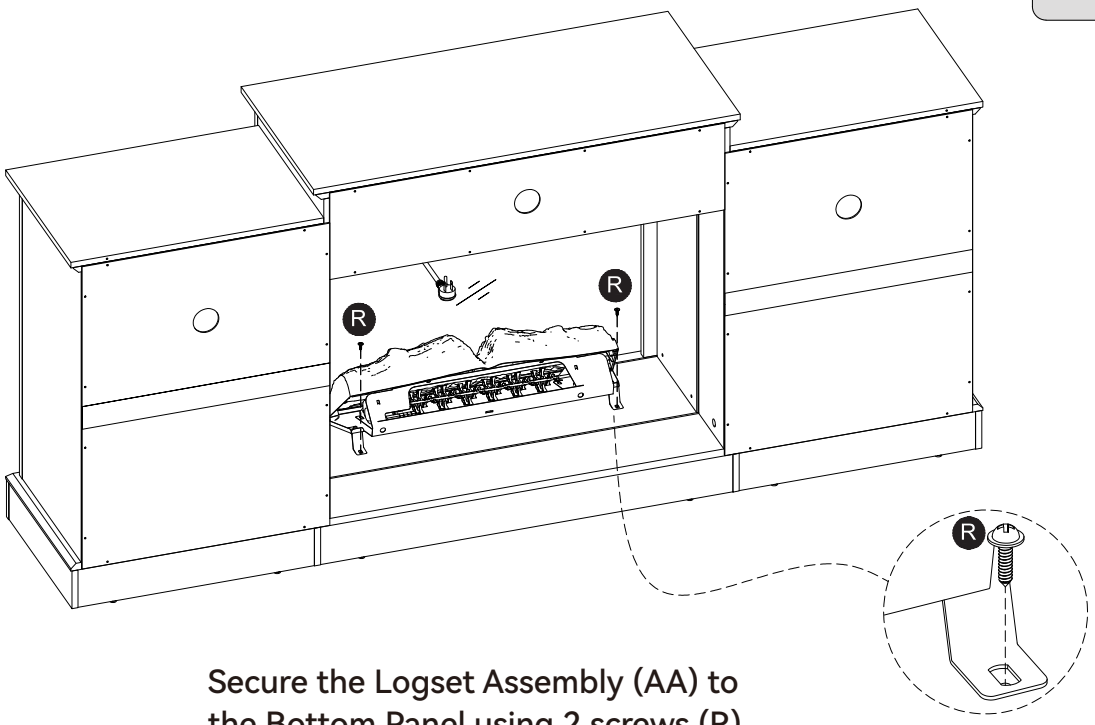

Secure the Logset Assembly (AA) to
the Bottom Panel using 2 screws (R).

Assembly Instructions

Step 45

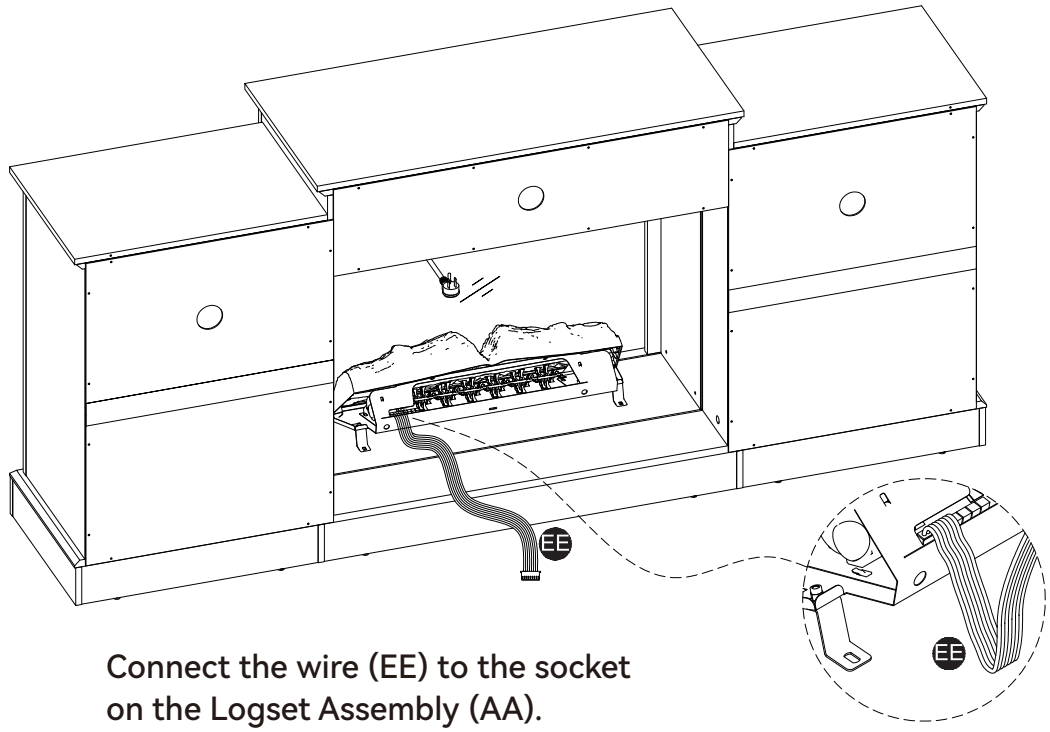

Connect the wire (EE) to the socket on the Logset Assembly (AA).

Step 46

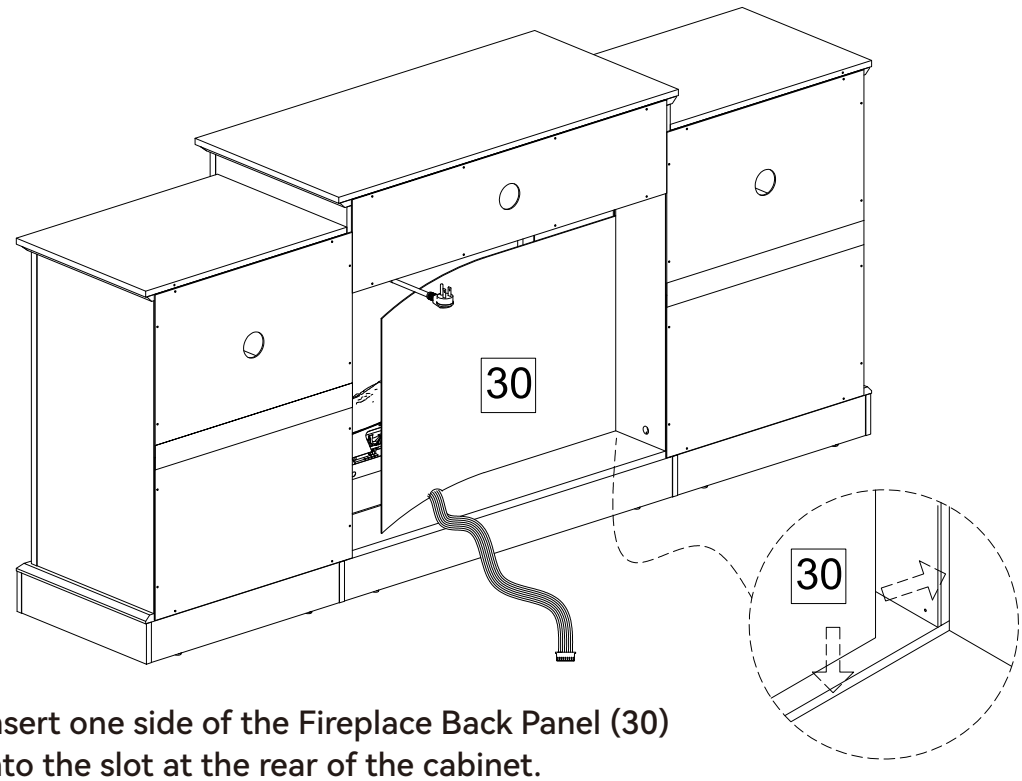

Insert one side of the Fireplace Back Panel (30) into the slot at the rear of the cabinet.

Assembly Instructions

Step 47

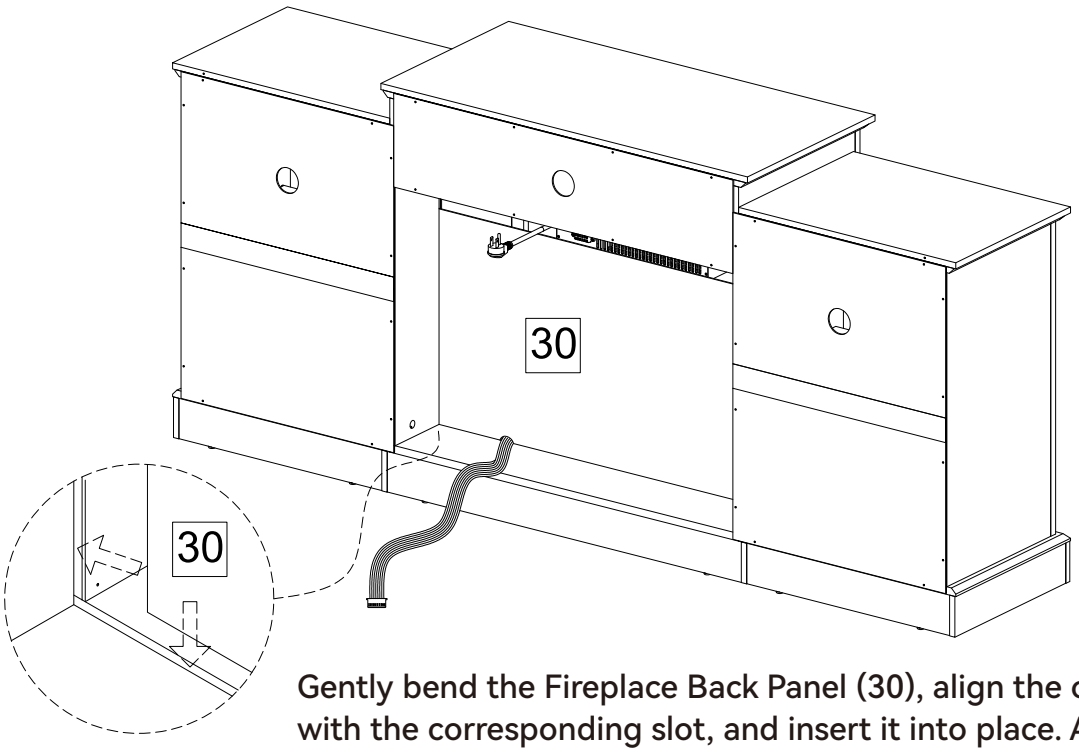

Gently bend the Fireplace Back Panel (30), align the other side with the corresponding slot, and insert it into place. Adjust as needed to ensure the edges are fully seated in the grooves.

Step 48

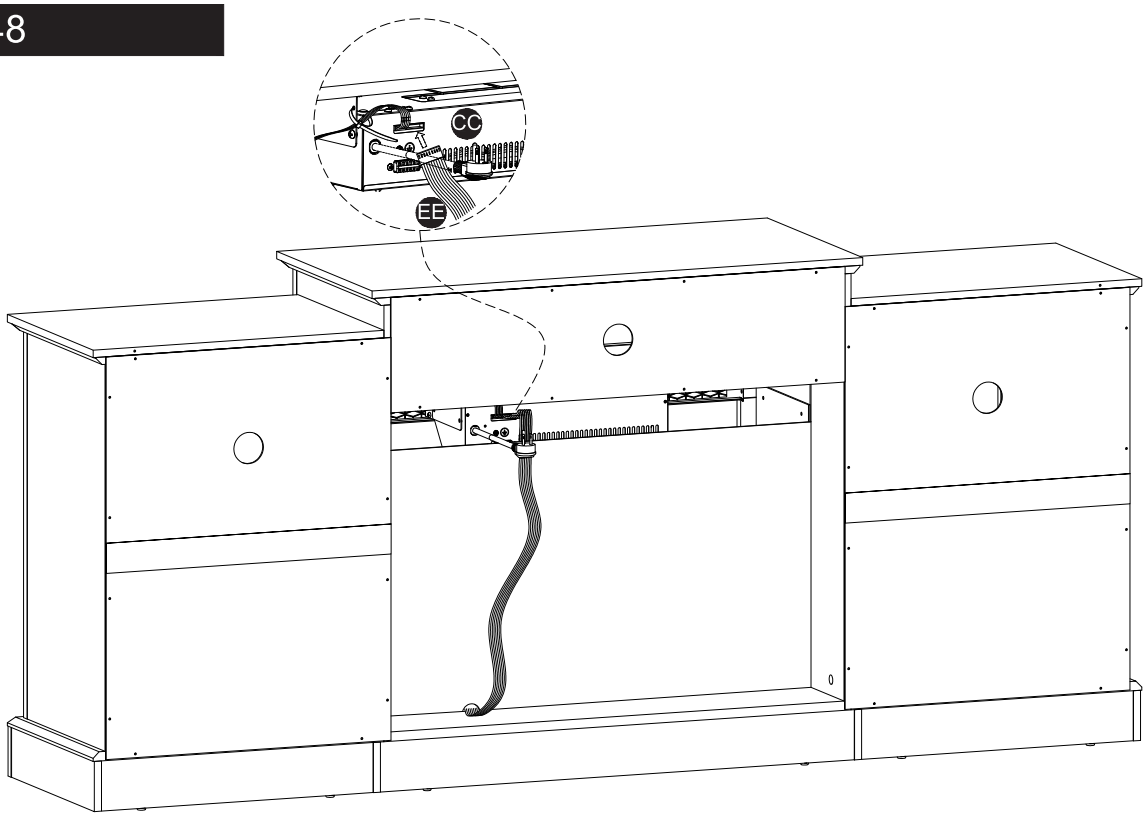

Connect the wire (EE) to the socket on the Fireplace Insert (CC).

Assembly Instructions

Step 49

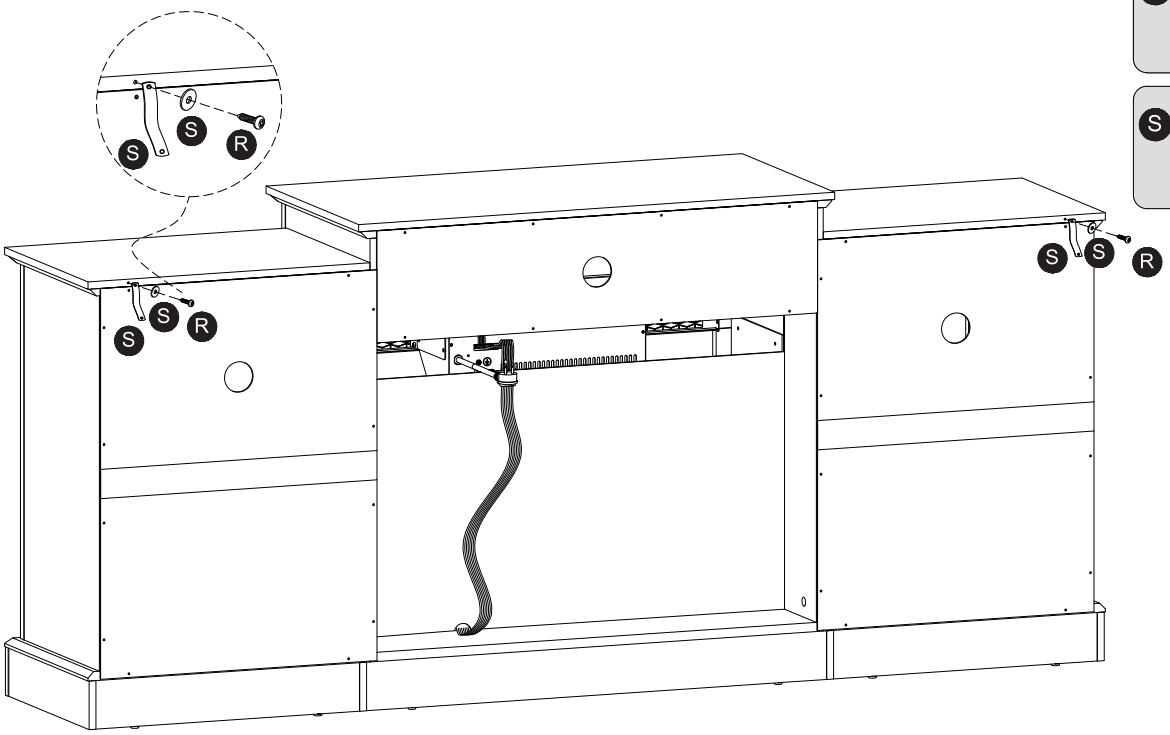

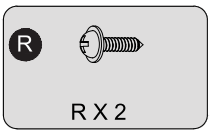

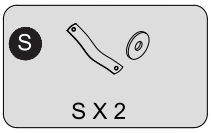

Secure the anti-tip strap (S) to the back of the panel by inserting 2 screws (R) through the washers (S).

Step 50

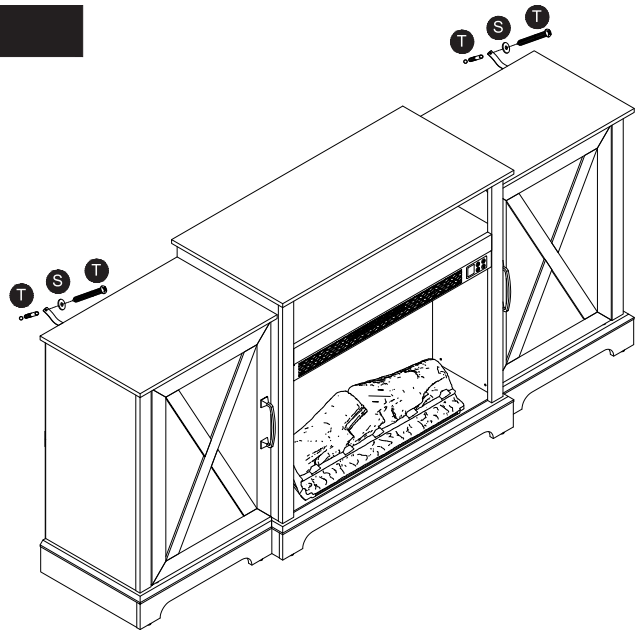

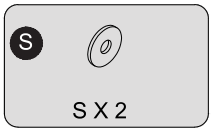

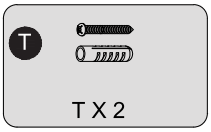

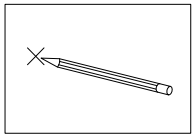

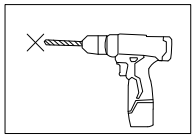

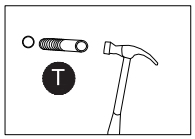

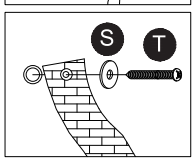

A. Move the cabinet to its desired location and mark the wall at the mounting holes of the anti-tip strap (S).
B. Drill two holes (Ø8 mm, 40 mm deep) at the marked positions.
C. Insert the wall anchors (T) into the holes.
D. Secure the anti-tip strap (S) to the wall using 2 screws (T) with washers (S) to prevent tipping.

USER MANUAL
Electric Fireplace

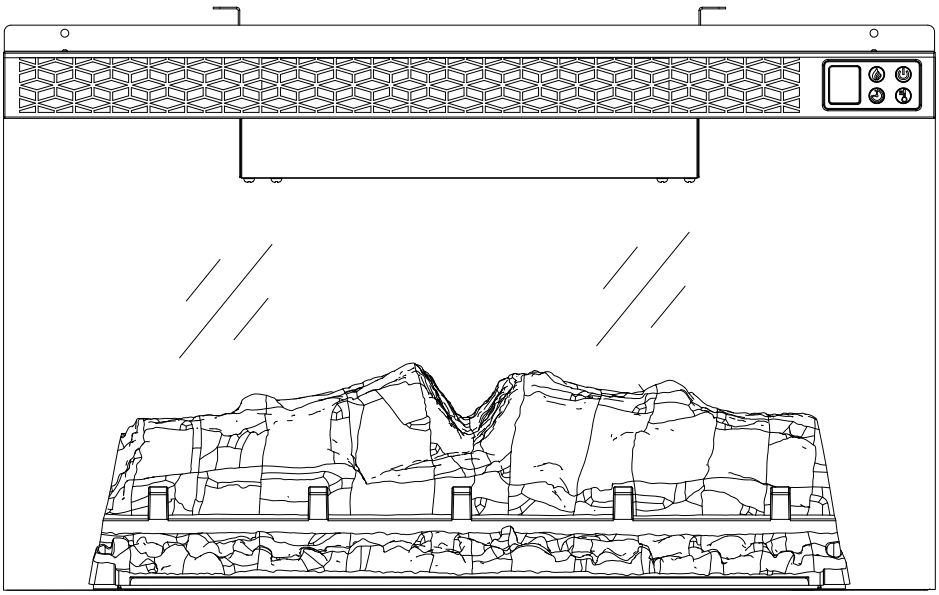

THIS INSTRUCTION BOOKLET CONTAINS IMPORTANT SAFETY INFORMATION.
PLEASE READ AND KEEP FOR FUTURE REFERENCE.

Safety Information

IMPORTANT SAFETY INFORMATION

PLEASE READ ALL OF THE INFORMATION IN THIS OPERATING MANUAL, INCLUDING ALL SAFETY, OPERATING, AND MAINTENANCE INFORMATION. TO AVOID THE POTENTIAL RISK OF FIRE, ELECTRIC SHOCK, OR INJURY TO PERSONS, USERS SHOULD FOLLOW THE DIRECTIONS AND WARNINGS IN THIS MANUAL

Read all instructions before using this heater.

Do not use this heater outdoors.

This heater is not intended for use in bathrooms, laundry areas and similar indoor locations. Never locate the heater where it may fall into a bathtub or other water container.

Do not run the power cord under carpeting. Do not cover the power cord with throw rugs, runners, or the like.

Arrange the power cord away from traffic areas and where it will not be tripped over.

To disconnect the heater, turn controls to off , then remove the plug from the outlet.

Connect to properly grounded outlets only. Always plug heaters directly into a wall outlet/receptacle. Never use with an extension cord or relocatable power tap (outlet/power strip).

To prevent a possible fire, do not block firebox air intakes or the exhaust in any manner. Do not operate the firebox on soft surfaces, like a bed, where openings may become blocked.

There is a thermostat limiter inside the heater. When the inner temperature over heats or abnormal heating occurs, the thermostat protective device cuts off the power supply to avoid fireplace damaged or risk of fire.

Use this heater only as described in this manual. Any other use not recommended by the manufacturer may cause fire, electrical shock, or injury to persons.

SAVE THESE INSTRUCTIONS

⚠ WARNING	There are no user serviceable parts inside the fireplace / heater, If the unit appears to malfunction, turn the unit off and unplug the unit from the wall immediately, and contact Customer.
⚠ WARNING	This heater is hot when in use.To avoid burns, do not let bare skin touch hot surfaces. If provided ,use handles when moving this heater, Keep combustible material, such as furniture, pillows, bedding, papers, clothes and curtains at least 3 f.t (0.9 meters) from the front of the heater and keep them away from the sides and rear.
⚠ WARNING	Extreme caution is necessary when any heater is used by or near children or invalids and whenever the heater is left operating and unattended.
⚠ WARNING	Always unplug the heater when not in use.
⚠ WARNING	Do not operate any heater with a damaged cord or plug or after the heater malfunctions, has been dropped or damaged in any manner. Return the heater to an authorized service facility for examination, electrical or mechanical adjustment, or repair.
⚠ WARNING	Do not insert or allow foreign objects to enter any ventilation or exhaust openings as this may cause an electric shock or fire, or damage the heater.
⚠ WARNING	Heater has hot and arching or sparking parts inside. Do not use in areas where gasoline, paint, or flammable liquids are used or stored.
⚠ CAUTION	While the heater is in use, the top center of the fireplace can get hot to the touch, and may cause serious injury or burns. Always supervise small children around the fireplace / heater. Do not place any cloth or decorations over the heater outlet of the fireplace, or otherwise obstruct the heater outlet of the fireplace, as this may cause a fire and serious injury may result,

Safety Information (continued)

GROUNDING INSTRUCTIONS

DANGER

Improper connection of the equipment-grounding conductor can result in a risk of electric shock. Check with a qualified electrician or serviceman if you are in doubt as to whether the product is properly grounded. Do not modify the plug provided with the product. If it will not fit the outlet, have a proper outlet installed by a qualified electrician.

This product must be grounded. If it should malfunction or breakdown, grounding provides a path of least resistance for electric current to reduce the risk of electric shock, This product is equipped with a cord having an equipment-grounding conductor and a grounding plug. The plug must be plugged into an appropriate outlet that is properly installed and grounded in accordance with all local codes and ordinances.

This heater is for use on 120-volt circuits and has a grounded plug. An adapter is available from your local electronics store or online supplier for connecting three-blade grounding-type plugs to two-slot receptacles. The green grounding lug extending from the adapter must be connected to a permanent ground such as a properly grounded outlet box. The adapter should not be used if a three-slot grounded receptacle is available.

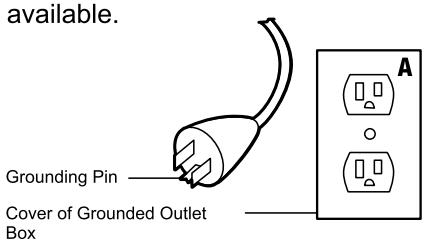

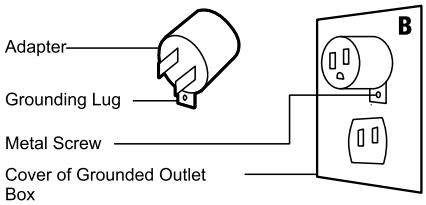

Pre-installation

TECHNICAL SPECIFICATION

Power Rating	1400W
Voltage	120V
Frequency	60Hz

Operation

Identifying the control panel

•The control panel is located on the top right corner of the fireplace/heater unit.
•The control panel contains the display unit (1), function indicator (2), timer function (3),heater control (4), flames control (5), and main power(6).
•The display unit (1) displays information about the flame level, time, and current temperature.

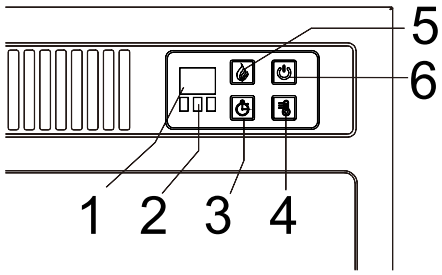

Understanding the function indicator

•The function indicator (2) has three square LEDS -
red, green,and blue.The red LED indicates that the Fahrenheit
temperature heating function is running, the green LED indicates that the Celsius temperature heating function is running, and the blue LED indicates that the timer function is engaged.
•To the bottom of the three LEDS, is the infrared receiver module which communicates with the remote control to control the heater.

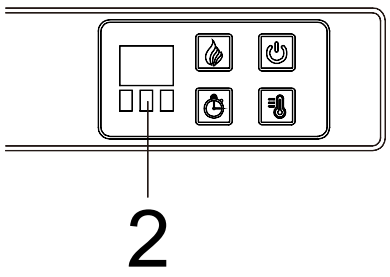

Operation

Using the timer function

The timer button (3) allows you to set the amount of time you want the fireplace / heater to run. The timer button (3) operates both the flames and the heater function. if the heater is operating when the timer is set, then the heater is on the timer. if the flames are operating, then the timer will control the flames. if both the heater and flamese operating with the timer set ,then the timer controls both the flames and the heater. Pressing the button in sequence will set the timer for a set interval. This interval period is shown in the display (1), in blue. The set intervals are displayed in this table. The timer interval is set from the time the interval is selected.There is no clock function for turning the heater or flames on or off at a specific time.

Button Press	Timer Interval
1st press	30 Minutes
2nd press	1 Hour
3rd press	2 Hours
4th press	3 Hours
5th press	4 Hours
6th press	5 Hours
7th press	6 Hours
8th press	OFF

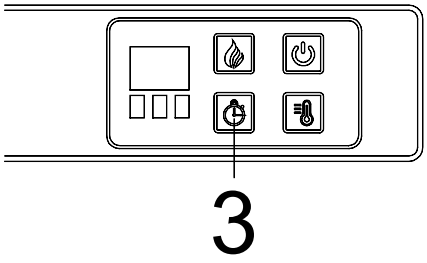

Using the heater control

1.Press the heater on/off button(4) to turn on the heating function. When turn it on, the heater will keep in “ON" mode automatically.
2. When the heater is on, long press the heater button for 5 seconds to enter the temperature setting adjustment. The LCD screen(1) will start flashing.
3. Press the heater button to cycle through the temperature level.
4. After choosing your heat level, wait for the LCD screen(1) to flash 2 times. Your temperature is now set.
5.With the heater on, gently press and hold the main power button for 5 seconds to enter temperature converting mode,Conversion between Fahrenheit and Celsius.

Note: The heater will automatically pause afer reaching the set temperature in your room, If the heater control is set to "oN" the heater will work nonstop until you shut it off manually.

Botton Press	Celsius Temperature
1	17℃
2	18℃
3	...
...	21℃
6	22℃
7	23℃
8	...
...	26℃
11	27℃
12	ON

Botton Press	Fahrenheit Temperature
1	62℉
2	63℉
3	64℉
...	...
11	72℉
12	73℉
13	74℉
...	...
20	81℉
21	82℉
22	ON

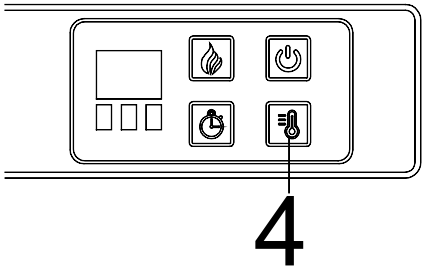

Operation

Using the flame contol

Press the flame control button (5) manually set flame color,. The flame color settings are as follows:

Button Press	Display Value	Flame Appearance	Button Press	Display Value	Flame Appearance
1st press	L1	Orange	5th Press	L5	Red&Orange
2nd press	L2	Blue	6th Press	L6	Red&Orange&Blue
3rd press	L3	Red	7th Press	L7	Cycle
4th press	L4	Red&Blue			

Brightness Control

Long press the flame button(5) for approximate 3 seconds to control the brightness of the flame display.
The brightness settingare as follows:

Display	Actual Brighiness
b5	Brightest
b4	Bright
b3	Medium
b2	Slightly Darker
b1	Darker

NOTE: Flame brightness is set to 100% by default.

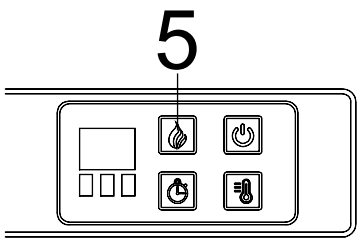

Using the main power button

•Press the power button(6) to turn the fireplace / heater unit on and off.
Press the power button (6) once to turn the unit on. Press again to turn the unit off.

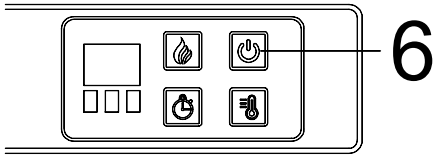

Using the Remote Control

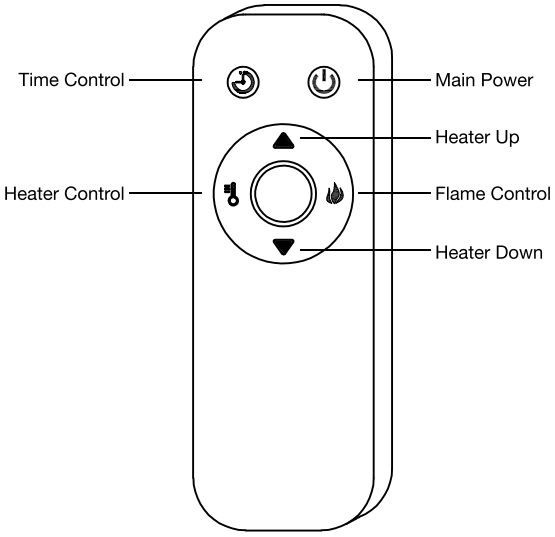

Using the Remote control
The operation of the remote control buttons work the same as button on the control panel.

NOTE: The remote control cannot be used to switch between degree Fahrenheit and degree Celsius.

Install the battery
For replacement batteries, use AAA batteries.

Press down and slide back cover off the battery compartment.

Insert two provided AAA batteries into the battery compartment making sure that the ends of the batteries with the negative(-) symbols are against the springs in the battery compartment.

Replace the battery compartment cover, making sure it snaps into position.

⚠ WARNING Do not ingest batteries.

Non-rechargeable batteries are not to be recharged.
Batteries are to be inserted with the correct polarity.
Exhausted batteries are to be removed from the product.
Always purchase the correct size and grade of battery most suitable for the intended use.
Replace all batteries of a set at the same time. .
Clean the battery contacts and also those of the device prior to battery installation.
Remove batteries from equipment when not used for an extended period of time.

NOTE:
Battery disposal
Please always dispose of batteries at a suitable recycling point.

Care and Maintenance

⚠ WARNING

Always disconnect from the power supply before cleaning the heater.
First turn off the main power.
Then remove the electrical plug from the wall outlet.

⚠ WARNING

Do not use this fireplace insert if any part of it has been under water.
Immediately call a qualified service technician to inspect the firebox and replace any part of the electrical system which has been underwater.

The blower motor and flame motor are pre-lubricated for a durable using time and need no further lubrication or maintenance.To remove any accumulation of dust or debris, the soft brush attachment of a vacuum cleaner should occasionally be used to clean the outlet grille of the fan heater.

Use a soft, clean cloth that will not scratch the surface when dusting.

Use a clean soft cloth dampened with warm water to clean the fireplace surface.

Do not use household or abrasive cleaners, as these products may damage the surface.

When cleaning the glass viewing screen use a non-abrasive damp cloth with liquid cleaner or soft soap

if necessary; Don NOT use cleaning powders or any other substance with abrasives since these substances will scratch glass.

Under no circumstances should this product be operated with a broken or chipped glass panel.

Do not strike or slam the glass.

In the event that your appliance is stained or otherwise damaged during use, we recommend that you call a professional to it.

When not in use please unplug the cord from the outlet to prevent any damage or accidents.

Troubleshooting

Problem	Solution
The unit does not turn on.	Check that the unit is fully plugged into a standard 120 V outlet. Press the power button on the control panel.
Flame effect is on, but there is no flame effect.	Open the top and back panels to check if the flame spindle has fallen off from the spindle motor.
The heater does not blow warm air.	Make sure the set temperature is higher than the room temperature.
The heater does not work.	Turn all switches to the“OFF”position and unplug the unit from the wall outlet for 5 minutes. After 5 minutes plug the unit back into the wall outlet, and operate as normal.
Remote control does not work.	Use it closer to the unit / change battery.