MODERN EMBER®

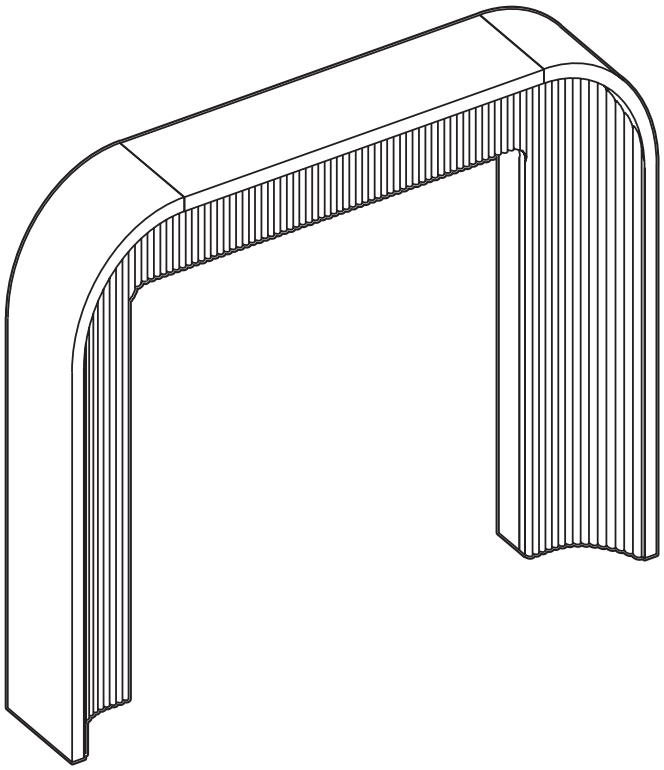

Models

LUNA-5642-MCLR · LUNA-5642-SBL · LUNA-5642-UMB · LUNA-5642-BLD · LUNA-5642-UN · LUNA-4842-MCLR · LUNA-4842-SBL · LUNA-4842-UMB · LUNA-4842-BLD · LUNA-4842-UN

Owner's Manual and Installation Guide

Luna Mantel Surround Collection

Important Safety Instructions

Read and understand the entire manual before attempting to assemble, install, or operate the product.

⚠ WARNING

Two people required for some steps.

⚠ WARNING

Heat clearances must be adhered to for installation of this product; adhere to your local building heat clearance codes and heat clearances as stated by the manufacturer of your specific firebox or stove model. Failure to do so will void the product warranty. Always consult a professional.

⚠ WARNING

DO NOT over load. The use of TVs or heavy loads may result in instability, causing tip over, which could result in serious injury or death.

⚠ CAUTION

Before assembly and installation, carefully unwrap all parts. Locate and set aside the hardware kit before disposing of the packaging.

⚠ CAUTION

Use care when assembling the product. Take your time and follow the instructions closely.

⚠ CAUTION

To avoid scratching the finish, assemble the product on a soft, non-abrasive surface such as carpet, thick bedding, or a large blanket.

Maximum Load

MAXIMUM LOAD 50 LBS. (22.6 KG)

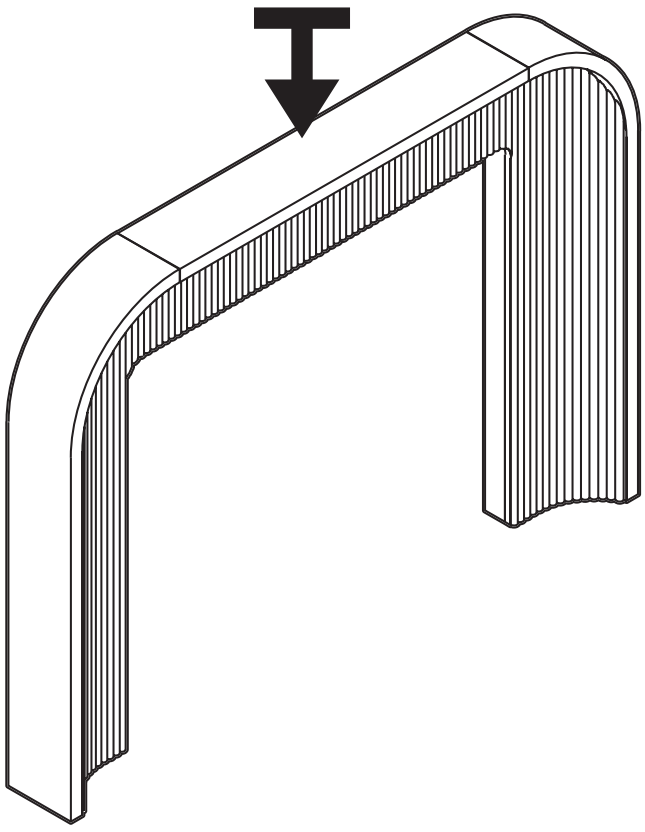

Assembly Preparation

PREPARATION NOTES

- Before you begin, locate the parts and hardware. Be sure all parts and hardware are present and can be identified.
- To avoid scratching the finish, assemble the product on a soft, non-abrasive surface such as carpet, thick bedding, or a large blanket.

TOOLS

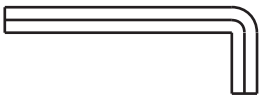

ALLEN WRENCH
(Included)

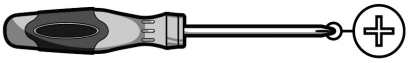

PHILLIPS HEAD SCREWDRIVER
(Not Included)



DRILL
(Not Included)



HAMMER
(Not Included)

PART LIST

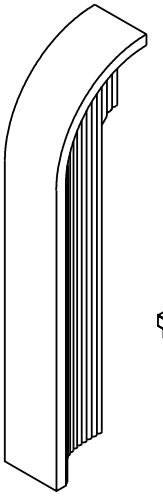

Left Side
1 piece

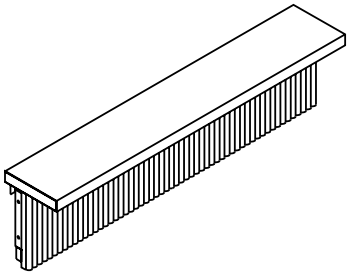

Middle
1 piece

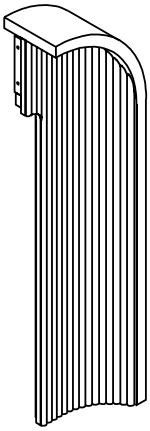

Right Side
1 piece



Side Scribe
2 pieces



Top Scribe
1 piece



Wooden Button
2 pieces

HARDWARE

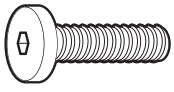

A x4
Bolt
∅1/4*38mm



B x4
Lock Washer
∅1/4



C x4
Flat Washer
∅1/4*19*1.5mm

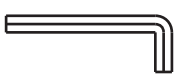

D x1
Allen Wrench
60*25*4mm

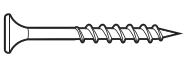

E x4
Mounting Screw
#10*80mm



F x1
Nails Pack
#5*38mm

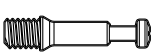

G x2
Cam Bolt
M6*42mm



H x2
Cam Lock
∅15*10mm



CALL US FIRST DO NOT RETURN TO STORE

For immediate assistance with assembly, missing parts, or if your product arrives damaged, please contact us before returning to the retailer.

1-888-575-6968

Monday through Friday, 8am to 5pm CST
customercare@modernember.com | mantelsdirect.com

SAVE THESE INSTRUCTIONS FOR FUTURE USE

If you sell or give this product to another person, make sure this manual is included with it.

Assembly Instructions

STEP 1

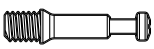

Gx2



Hx2

FRONT

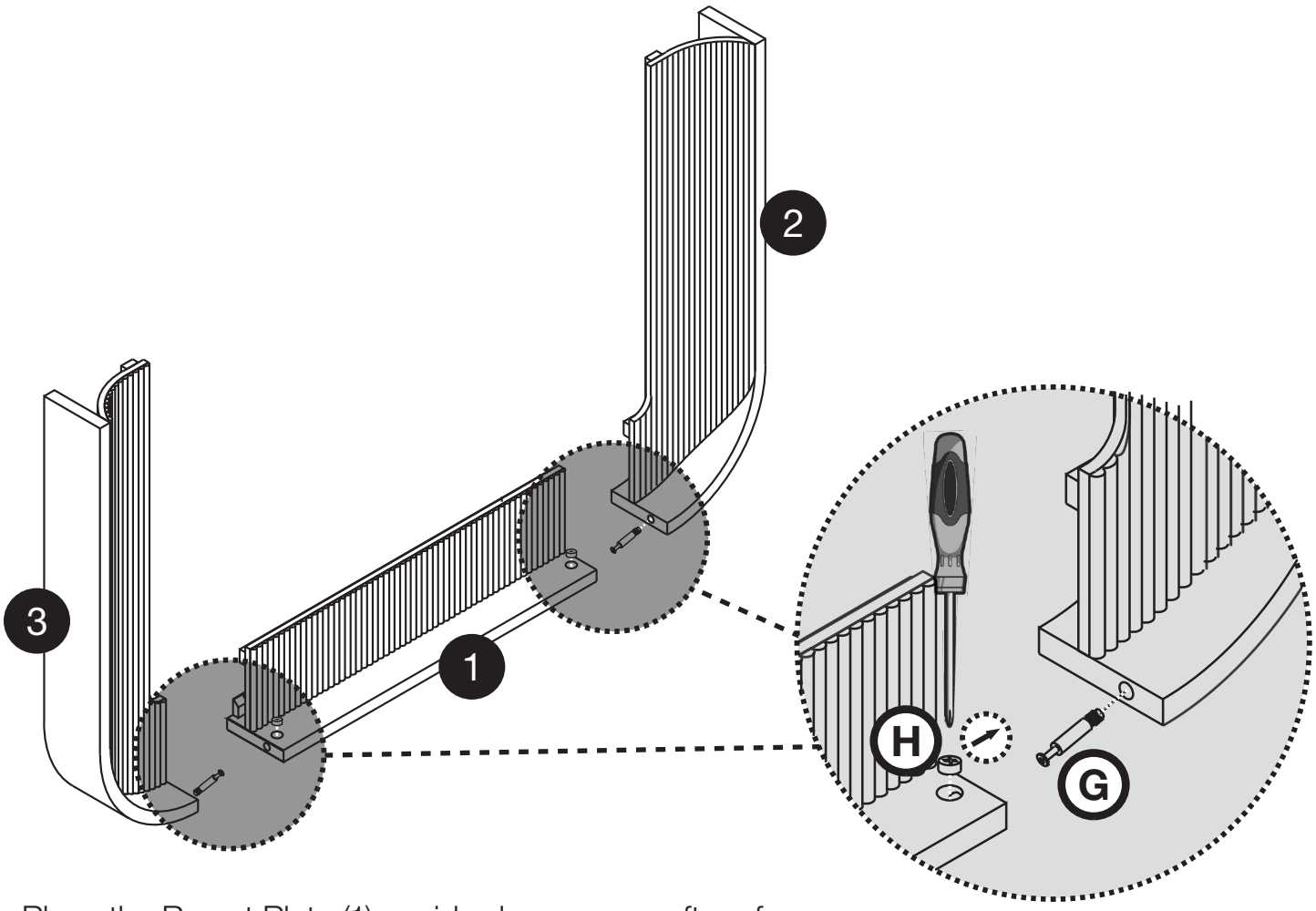

1. Place the Breast Plate (1) upside down on a soft surface. Align the holes of the Left Leg (2) and Right Leg (3) to the Breast Plate (1).

2. Screw Cam Bolts (G) into place. Insert Cam Lock (H) with arrow pointing towards Cam Bolt. Use a screw driver to tighten the Cam Lock and Bolts together.

3. Insert Wooden button to cover the Cam Lock (H)

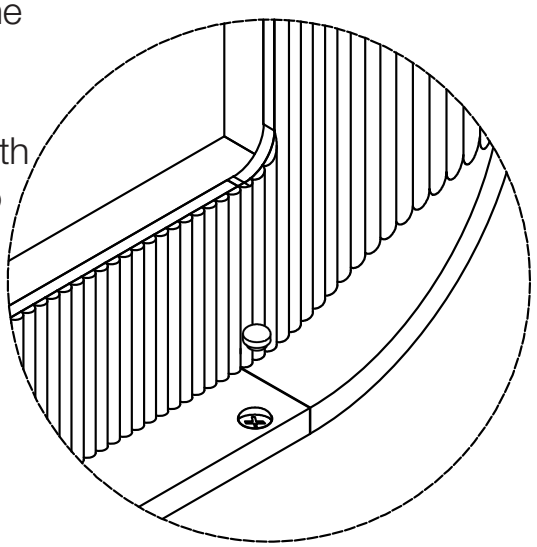

Assembly Instructions

STEP 2

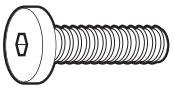 **A**x4	 **B**x4	 **C**x4	 **D**x1

BACK

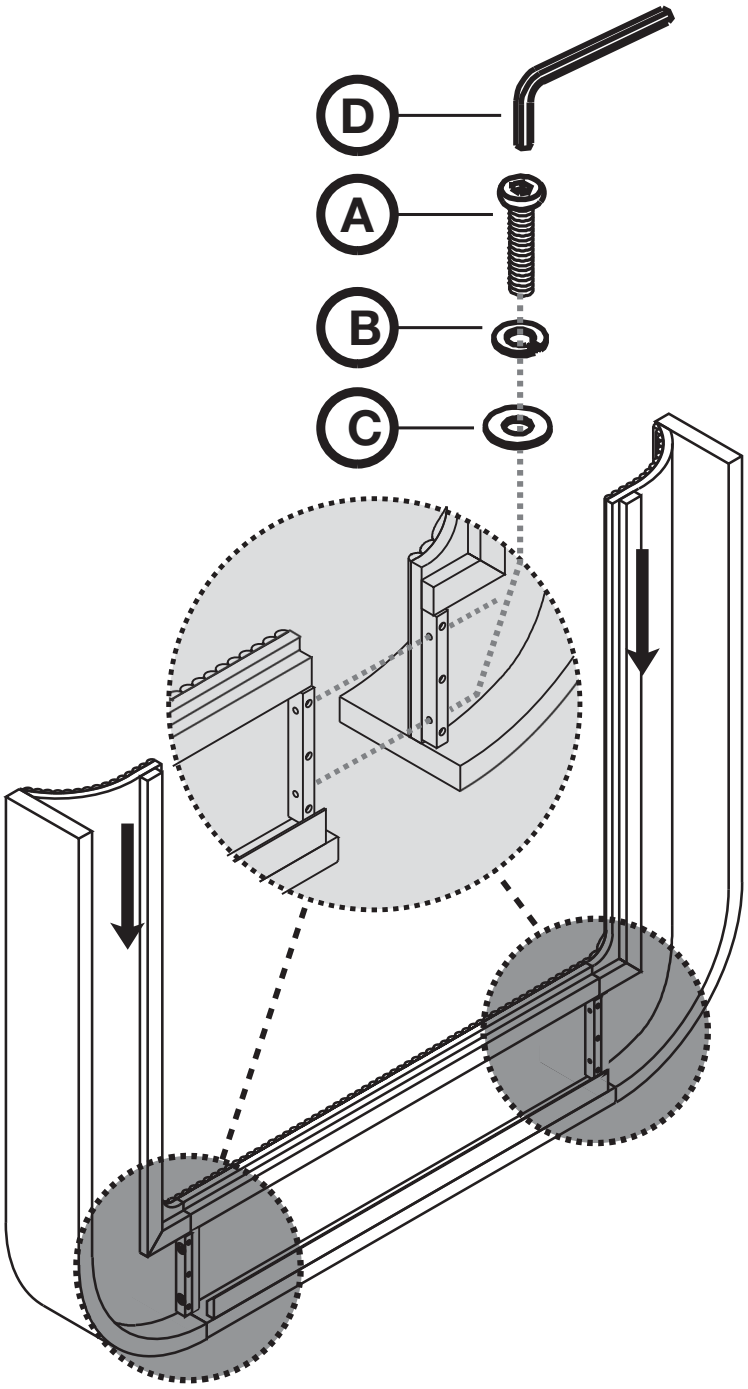

1. Use 1-3/4” long Bolt **(A)**, Lock Washer **(B)**, and Flat Washer **(C)** to attach the Left Leg **(2)** and the Right Leg **(3)** to the Breast Plate **(1)** as pictured above.
2. Use Provided Allen Wrench **(D)** to tighten hardware.

Installation Guide

MOUNTING GUIDE

It is recommended to mount to a wall studs. If your application calls for mounting directly to drywall, concrete, or brick, we recommend using the appropriate hardware that can be found at your local hardware store.

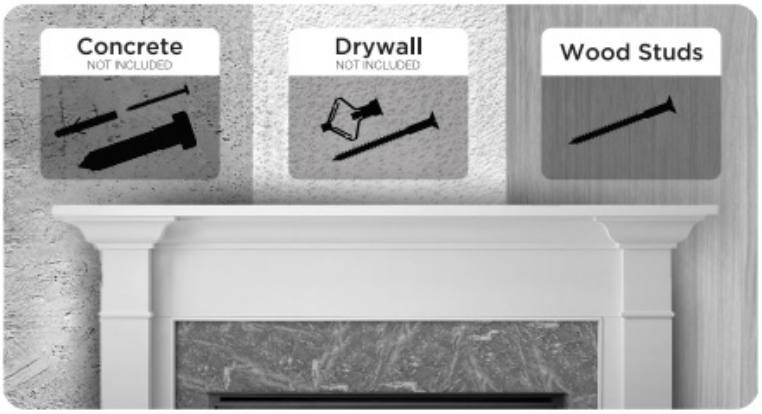

REQUIRED:

(NOT INCLUDED)

Pencil	**Tape Measure**
Level	**Stud Finder**
Drill	**Hammer**

MAY BE REQUIRED:

(NOT INCLUDED)

Drywall Anchors
Concrete Anchors
Lag Bolts

Installation Guide

STEP 1: ASSEMBLE YOUR FIREPLACE MANTEL

Locate an area large enough to assemble your Fireplace Mantel, we recommend a floor section that has a soft surface. Place Breast Plate upside-down on a floor. One at a time, line up the holes on the legs with the holes on the Breast Plate and using the assembly hardware included, bolt each leg to the header. Make sure legs are straight, then tighten bolts to secure the legs. Leave on the floor until measuring is completed.

See the following section **“Assembly Instructions”** starting on page 5 for step-by-step instructions.

Installation Guide

STEP 1



E x 4

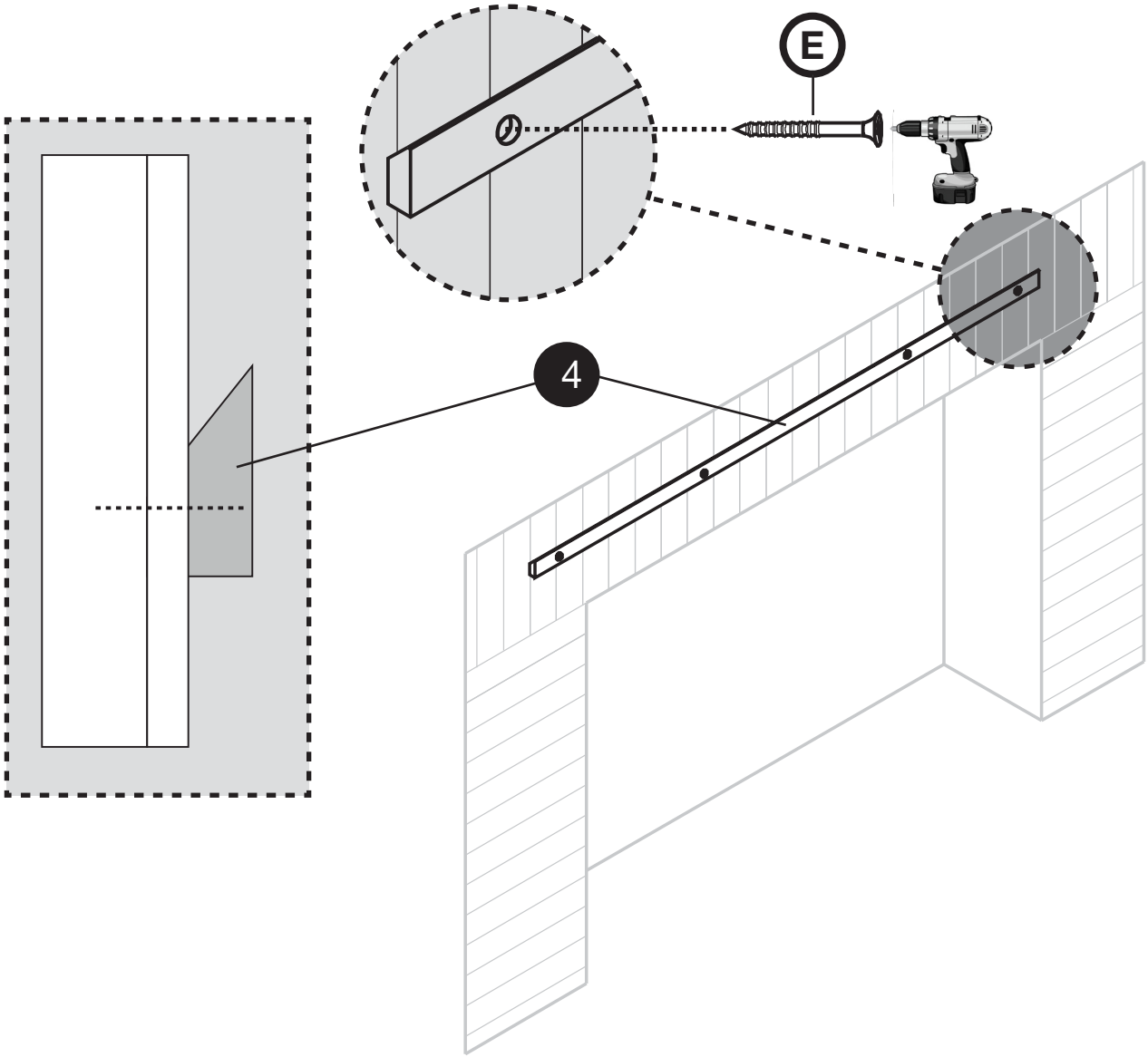

1. With the Fireplace Surround **(1-3)** upside down on a soft surface, hold the mounting board in position on the Breast Plate **(1)**. Measure from the top of the Breast Plate **(1)** to the bottom of the mounting board **(4)** and make note of this measurement.

2. Place the Fireplace Surround **(1-3)** against the fireplace in the desired location. Draw a line on the wall along the top of the Fireplace Surround. Remove the Fireplace Surround from the wall. Using your noted measurement, measure and mark reference point for the bottom of the Mounting Board **(4)**. Using a level, mark the line at several points to ensure a level mount.

3. Using a stud finder, locate and mark the center of 3-4 studs inside the wall you intend to mount your surround. Use the mounting board **(4)** to drill pilot holes at marked studs.

4. Using Screw **(E)**, attach the French Cleat Mounting Board **(4)** to the wall.

Installation Guide

STEP 2

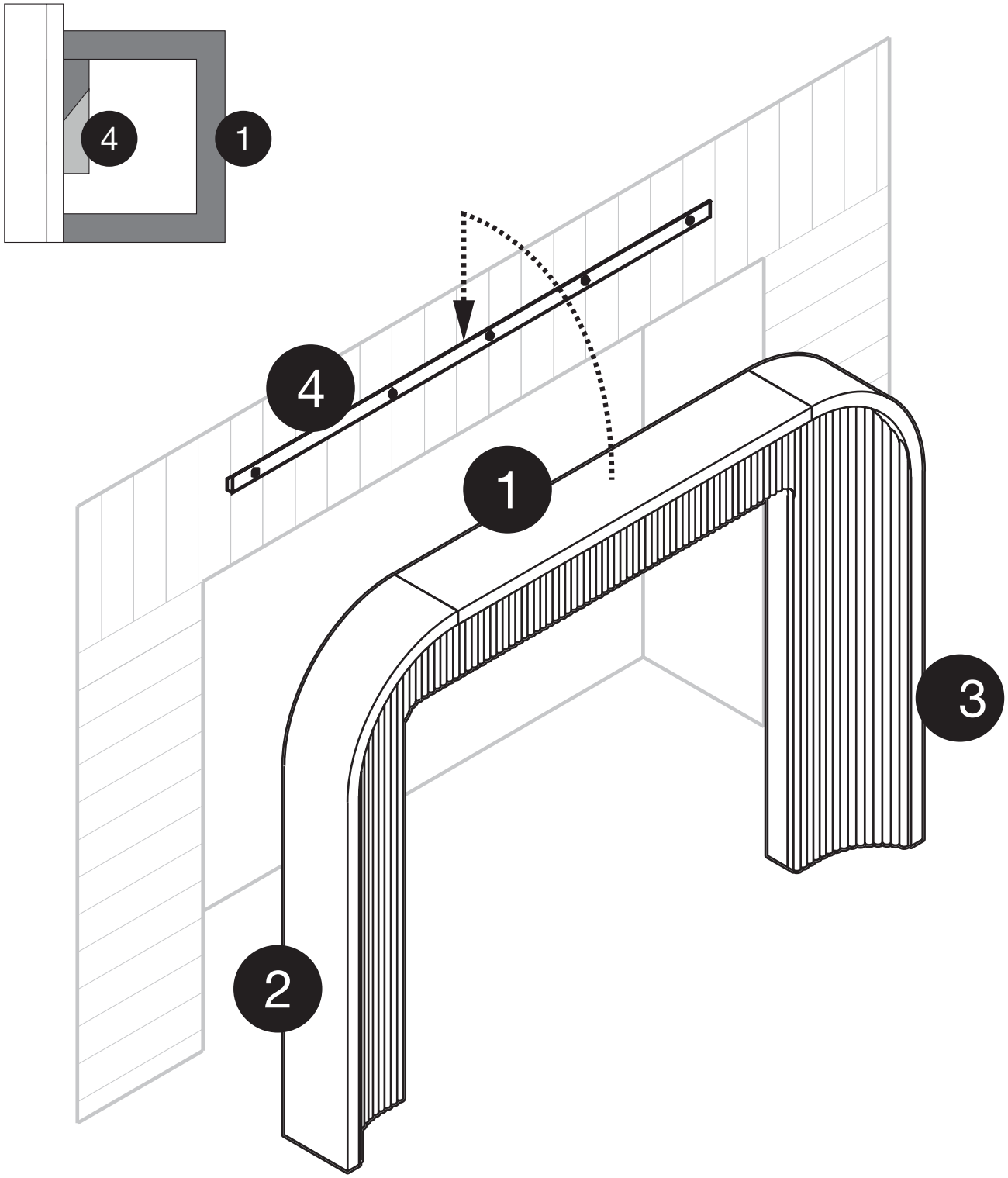

1. Lift and place the Fireplace Surround **(1-3)** onto the French Cleat Mounting Board **(4)** and slide down until the surround is tight against the wall.
2. Push the surround tight against the wall and then push down firmly on the surround to ensure the French cleat is properly connected.

Installation Guide

STEP 3

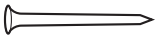

F x 9

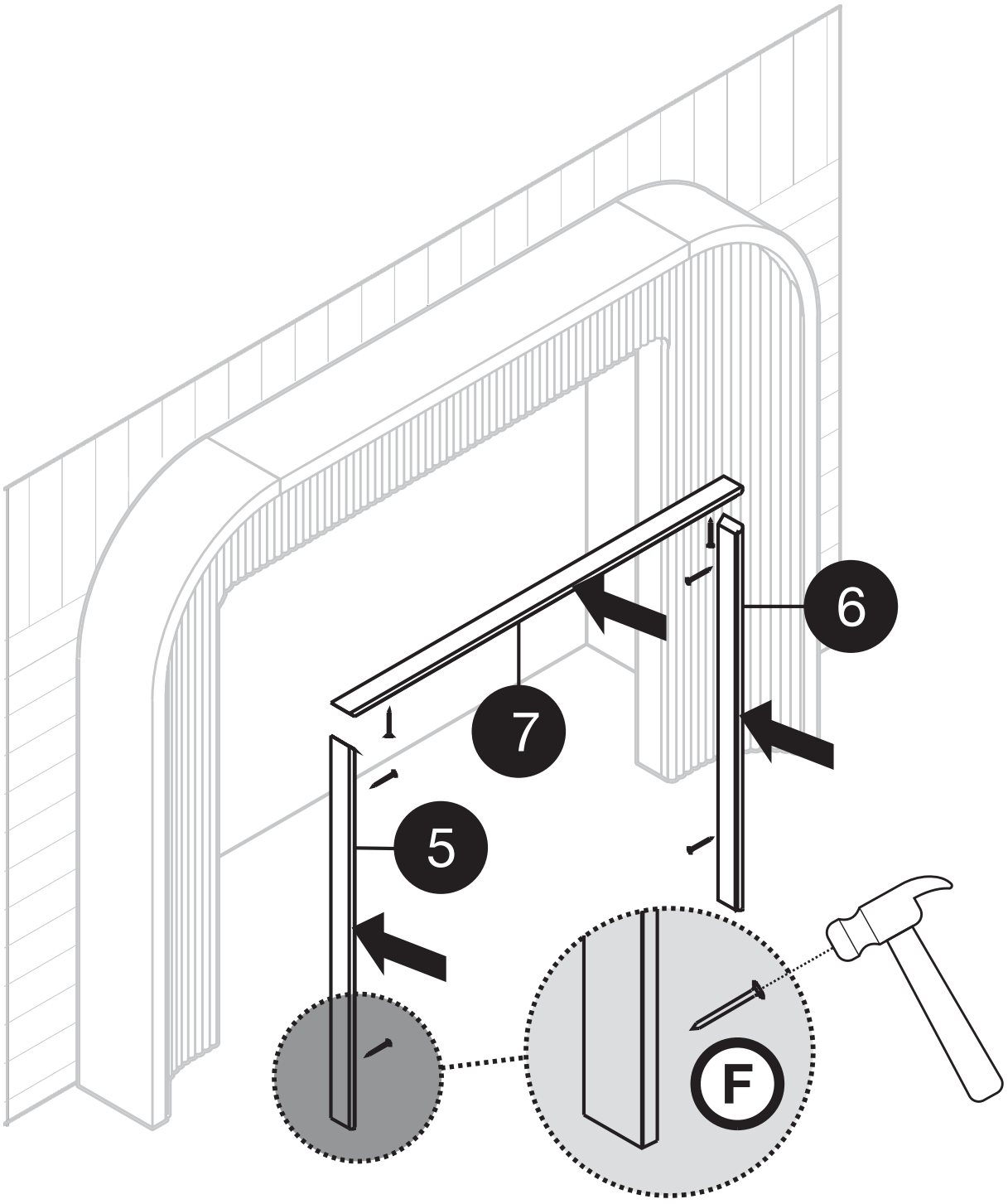

1. Install the Left Scribe Molding **(5)**, Right Scribe Molding **(6)**, and Top Scribe Molding **(7)** using the supplied small nails **(F)**.

NOTE: The edge of the surround against the wall may not be tight against the wall across the whole length of the surround. The wall may not be uniform and flat. If not, use caulk to fill the gap.

MODERN EMBER®

Thank you for your purchase.

Each unit has been manufactured to ensure safety and reliability. Before first use, read the instructions carefully and keep them for further reference.

Questions, problems, missing parts?
Before returning to store, call Customer Service:

8am-5pm CST, Monday - Friday

Phone: 1-888-575-6968

Email: customercare@modernember.com

Retain this manual for future use.

Don't forget to tag us!
@modern.ember