GT-USC3278-24

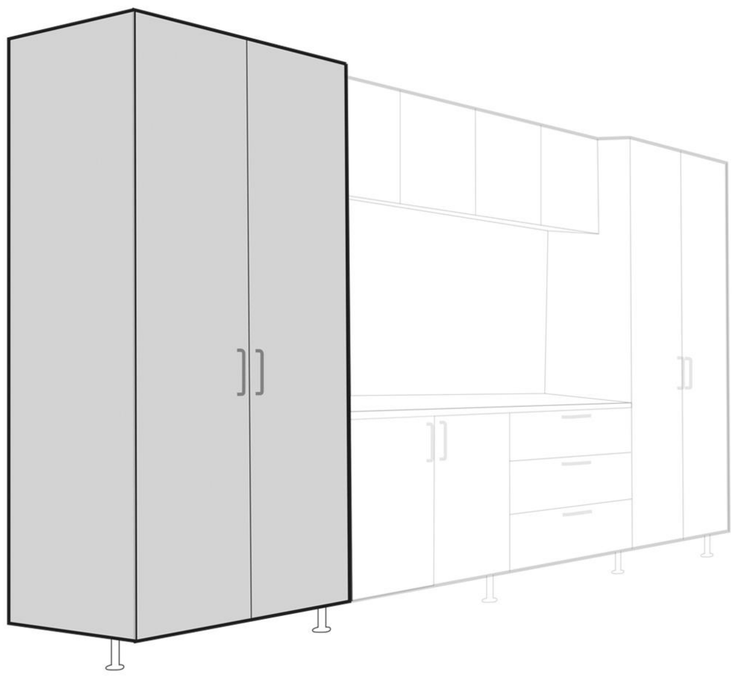

GARAGE TECH

Serious or fatal crushing injuries can occur from furniture tipping.
To help prevent tipping:

- Never allow children or adults to climb on this furniture
- Never open more than one drawer at a time
- Casters and skids are intended for manufacturing and shipping

purposes only and must be removed from all furniture at installation

If a tipping restraint is not supplied with the furniture, immediately contact the store where the furniture was purchased.
DO NOT INSTALL WITHOUT A TIPPING RESTRAINT.
Use of a tipping restraint may only reduce, but not eliminate the risk of tipping.

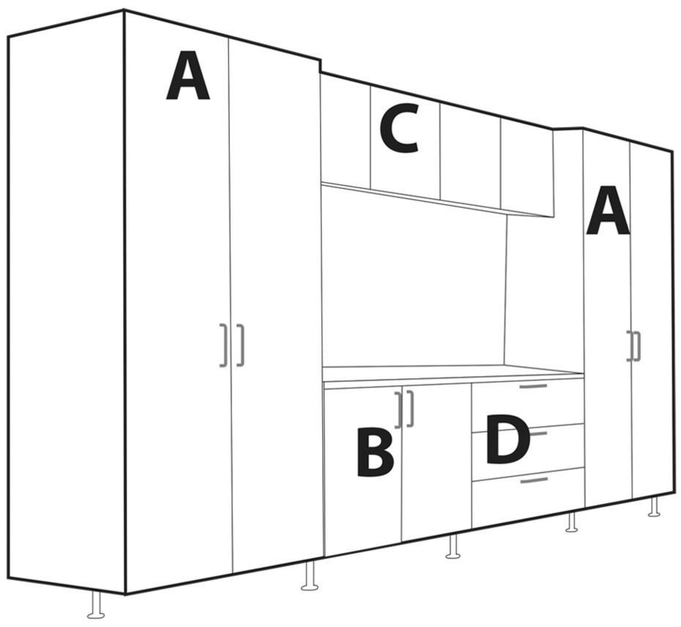

A

ⓐ SIDE

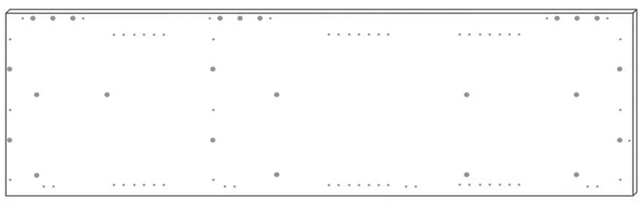

x 2

ⓑ DOOR

x 2

ⓒ TOP, MIDDLE,BOTTOM

x 3

ⓓ MIDDLE

x 2

ⓔ BACK-A

x 2

ⓕ BACK-B

x 1

A

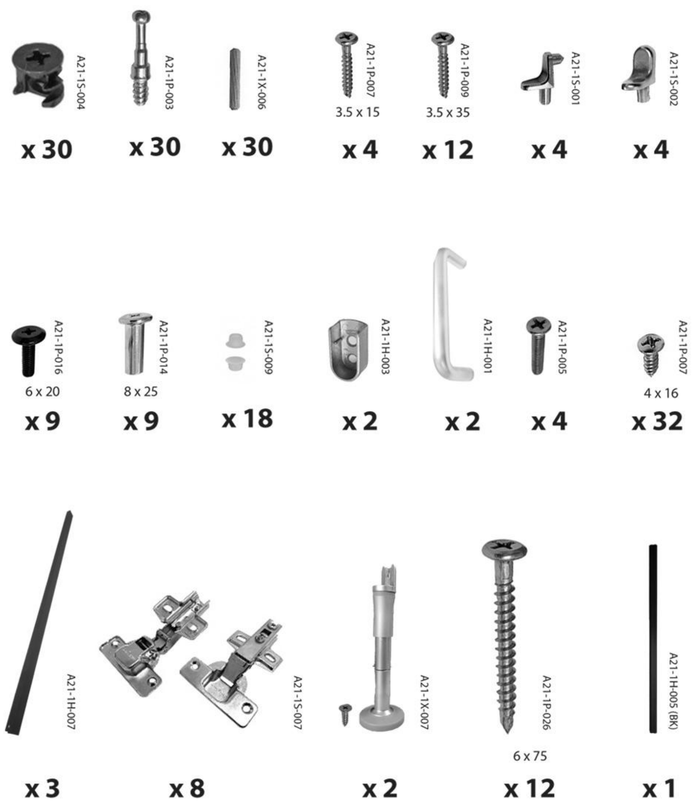

1

A-1

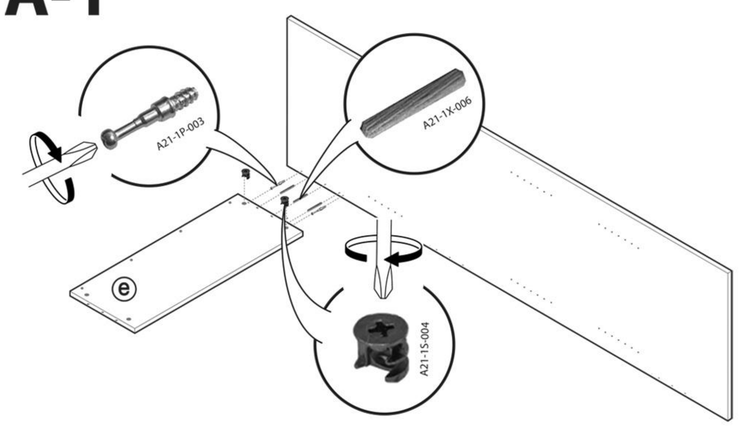

A-2

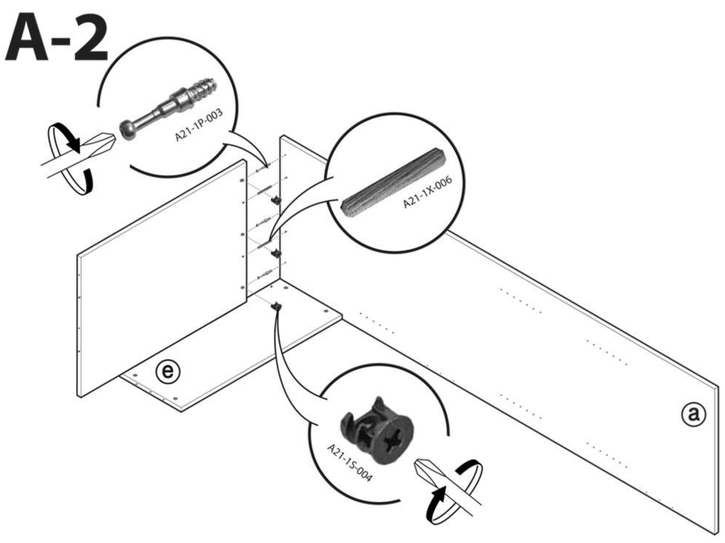

2

A-3

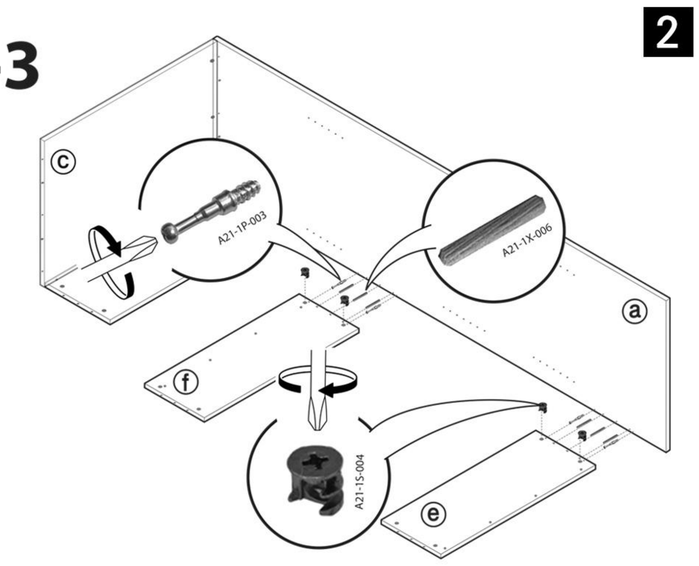

A-4

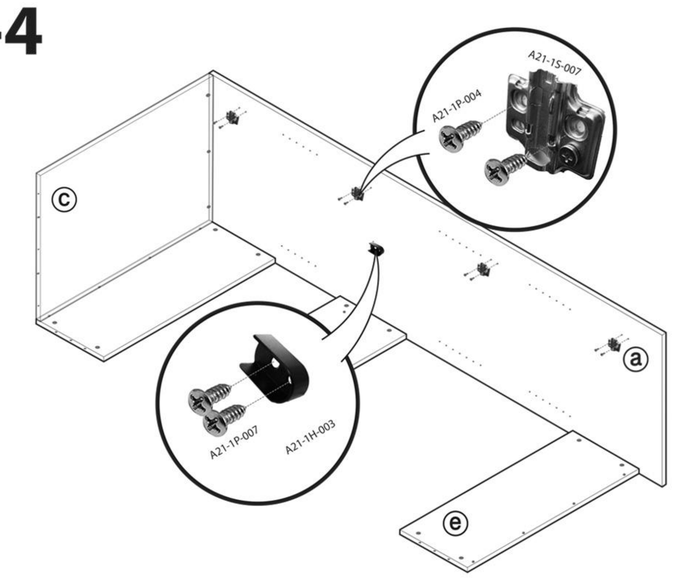

3

A-5

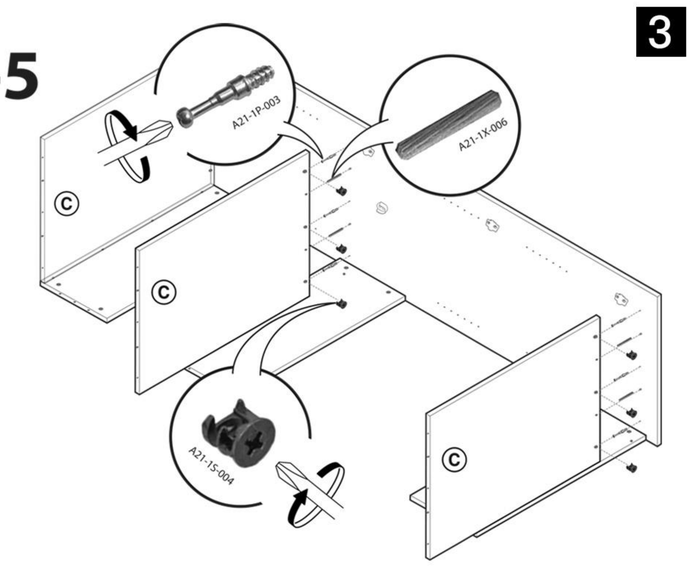

A-6

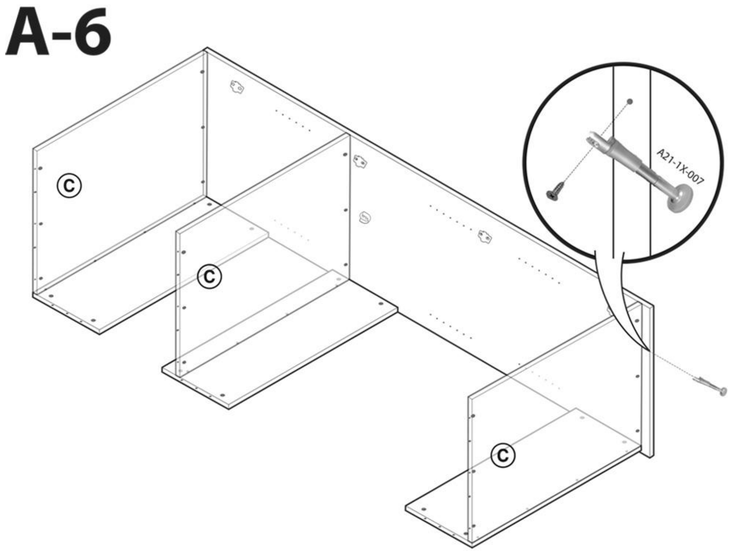

4

A-7

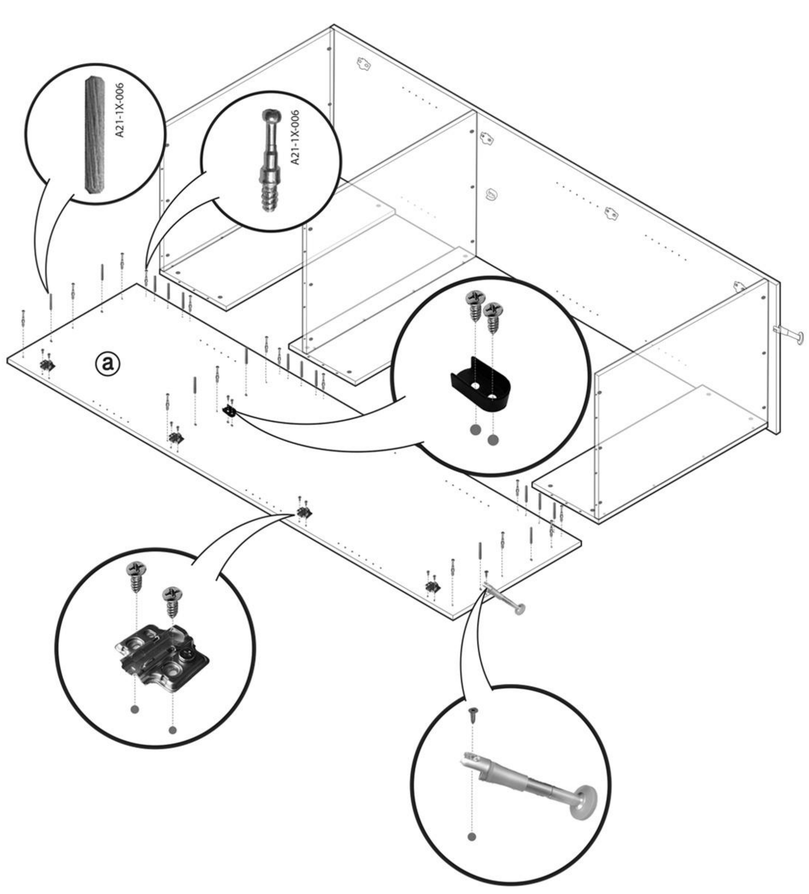

5

A-8

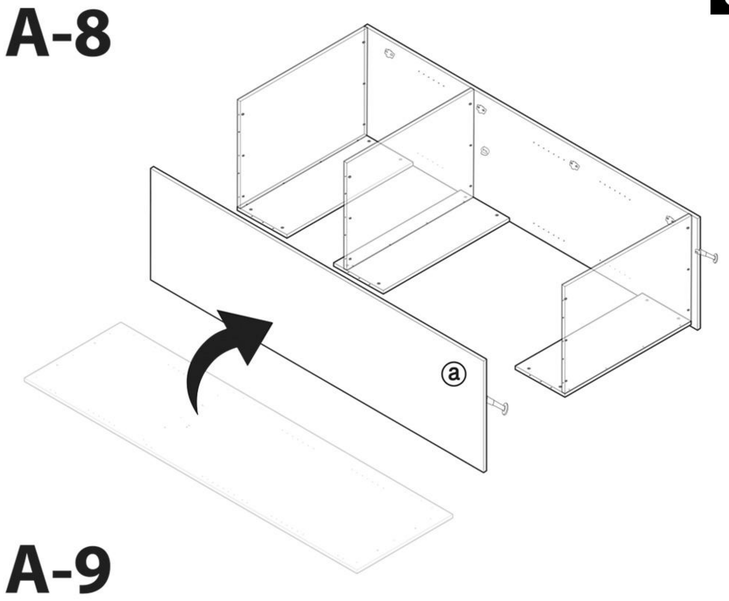
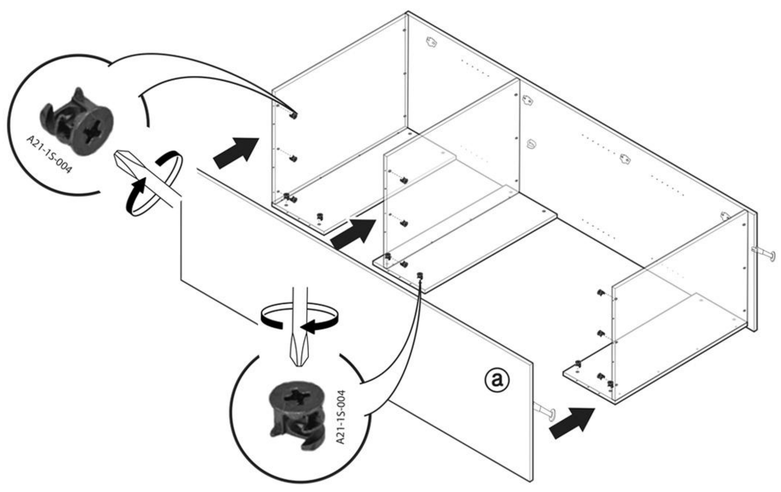
A-9