Assembly Instruction

Item AA — 1 pc — Headboard	Item AB — 1 pc — Footboard	Item AC — 2 pcs — Side Rail
Item AD — 2 pcs — Center Rail	Item AE — 1 pc — 14 pcs Slats	Item AF — 4 pcs — Leg
Item AG — 8 pcs — Drawer Slide 500	Item AH — 8 pcs — Drawer Slide 500	Item AI — 4 pcs — Support Leg
Item 1 — 4 pcs — Drawer Front Panel	Item 2 — 4 pcs — Drawer Back Panel	Item 3 — 8 pcs — Drawer Side Panel
Item 4 — 4 pcs — Drawer Bottom Panel	Item 5 — 8 pcs	Item 6 — 2 pcs
Item 7 — 2 pcs	Item 8 — 2 pcs	Item 9 — 2 pcs
Item 10 — 4 pcs		

Item A — 24 pcs — Plastic Dowel (8 x 25)	Item B — 24 pcs — JCBC W M6 x 40	Item C — 20 pcs — JCBC M6 x 40
Item D — 20 pcs — White Nail Leg	Item E — 48 pcs — Power Nail ⅝	Item F — 56 pcs — CSK M3.5 x 16 mm
Item G — 16 pcs — CSK M4 x 25mm	Item H — 50 pcs — CSK M4 x 32 mm	Item I — 32 pcs — CSK M4 x 50mm
Item J — 1 pc — Allen Key 65 mm	Item K — 16 pcs — M6 Flat Washer	

Step 1

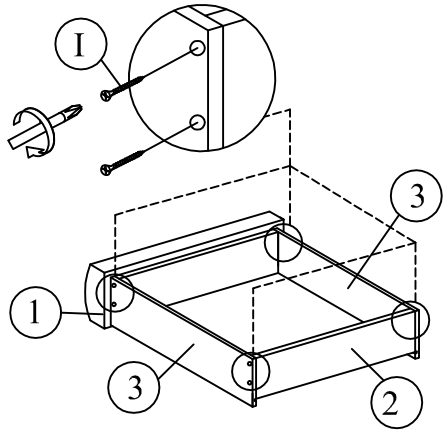

Step 2

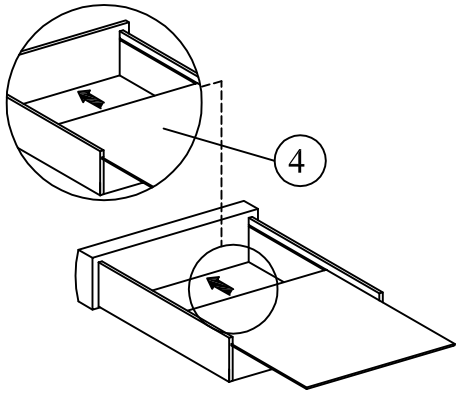

Step 3

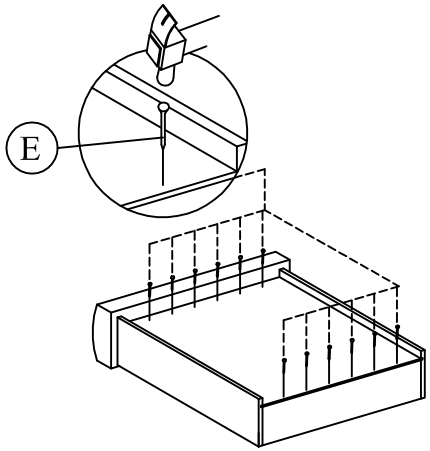

Step 4

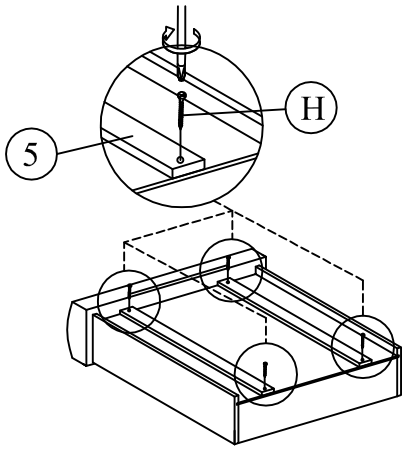

Step 5

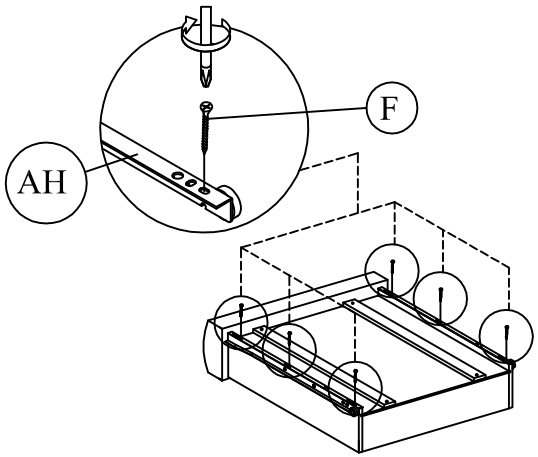

Step 6

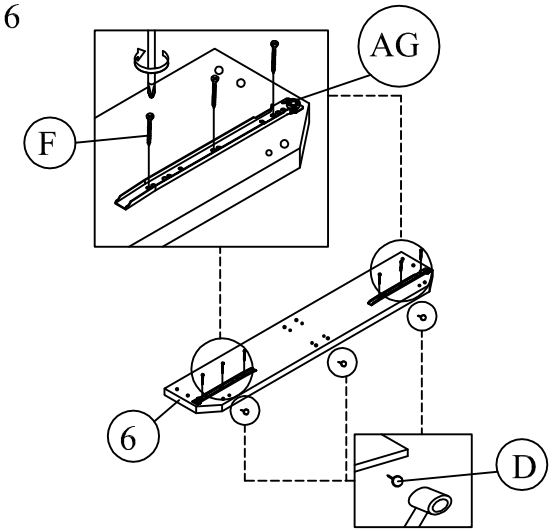

Step 7

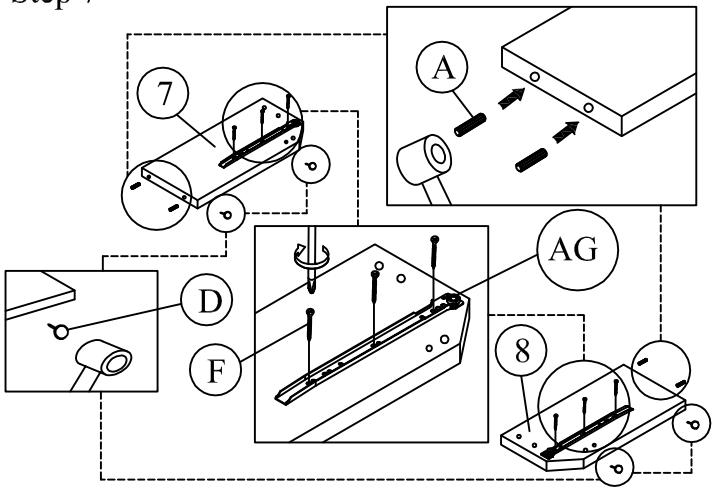

Step 8

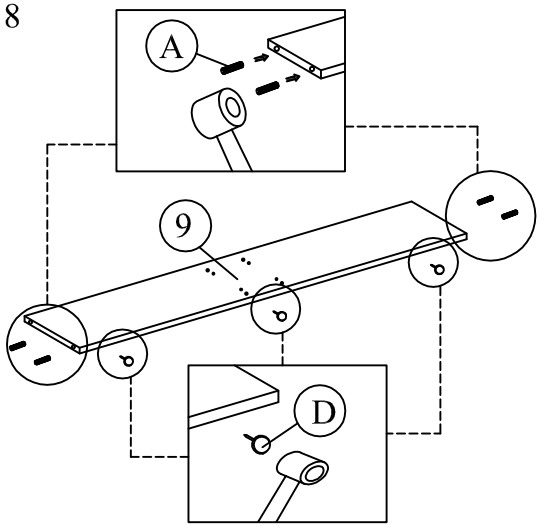

Step 9

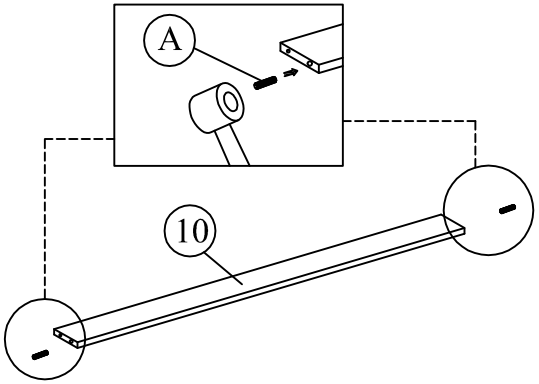

Step 10

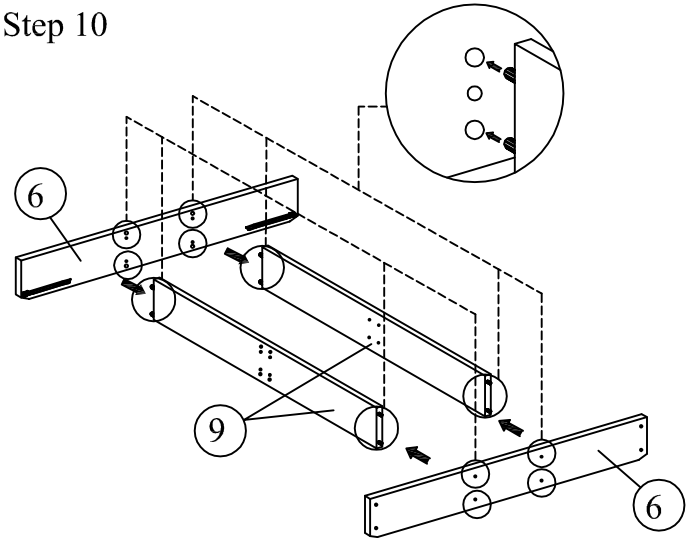

Step 11

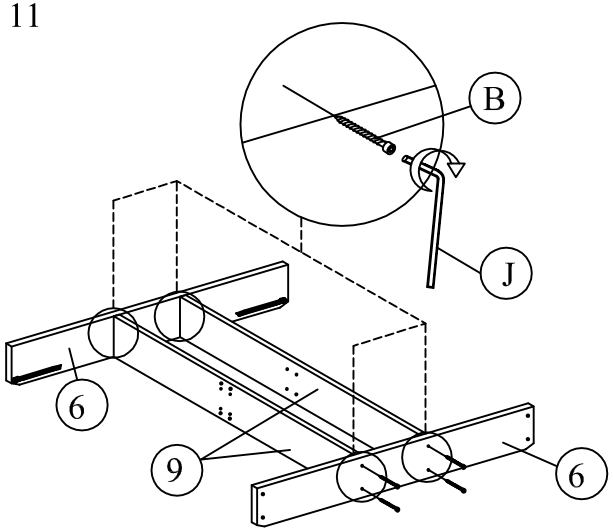

Step 12

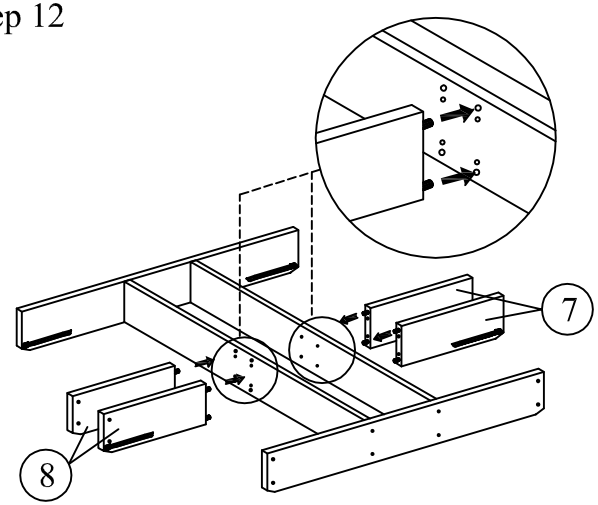

Step 13

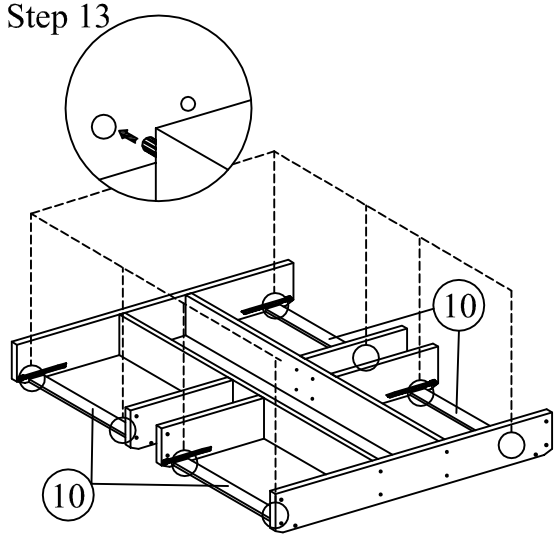

Step 14

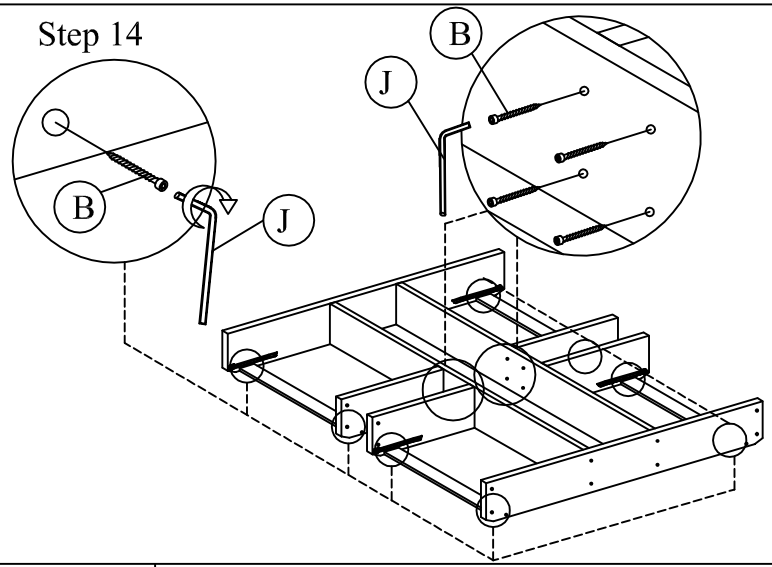

Step 15

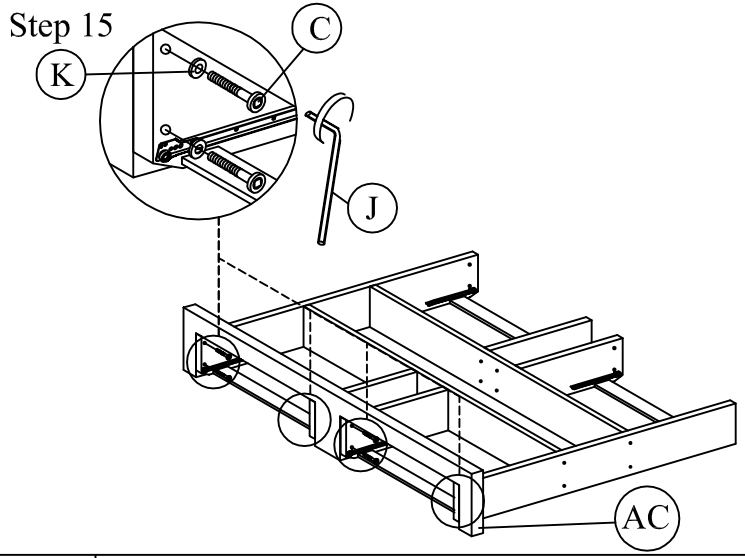

Step 16

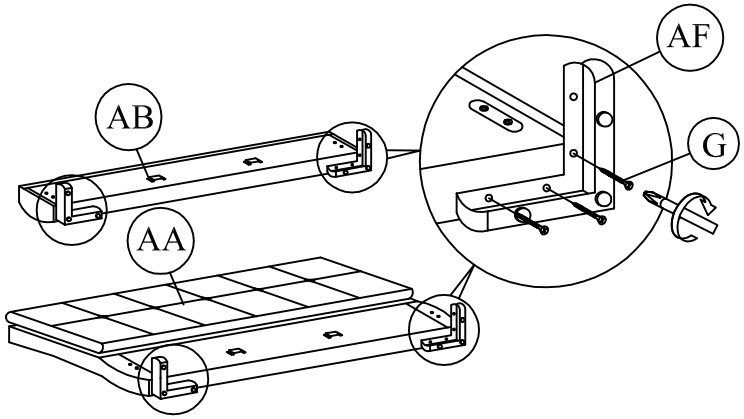

Step 17

Dismantle the JCBC screws and flat washers from headboard & footboard as shown.

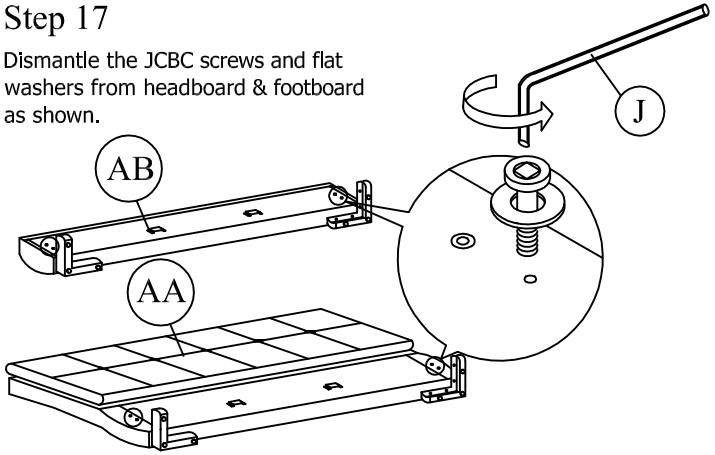

Step 18 Please attach screw to headboard & footboard. Do not rotate completely until step 23.

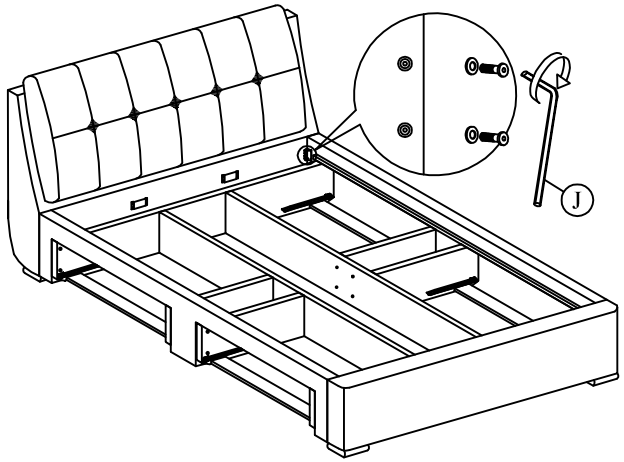

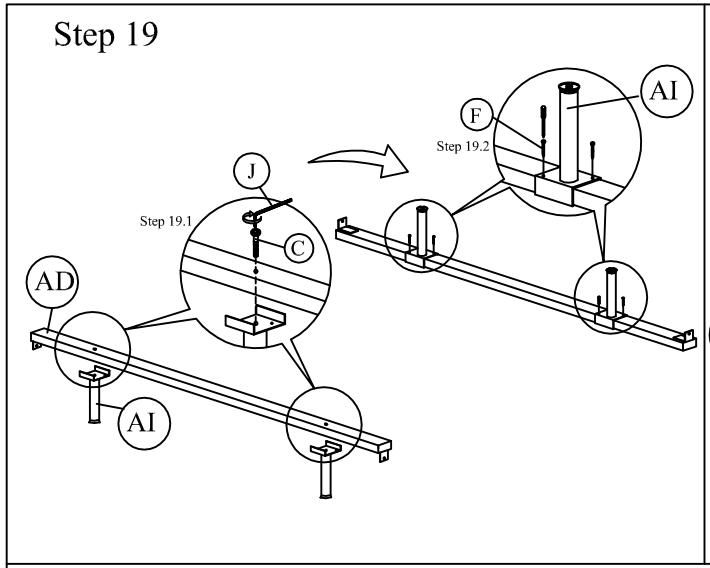
Step 19
AI
F
Step 19.2
J
Step 19.1
C
AD
AI

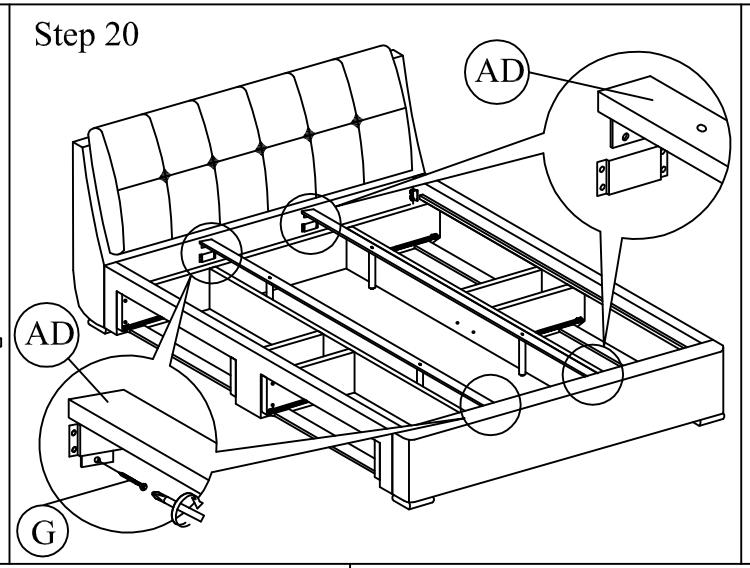
Step 20
AD
AD
G

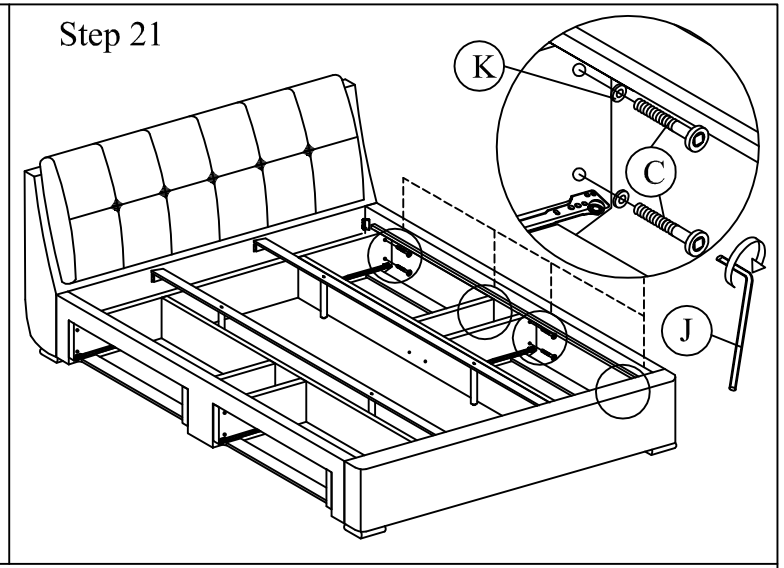
Step 21
K
C
J

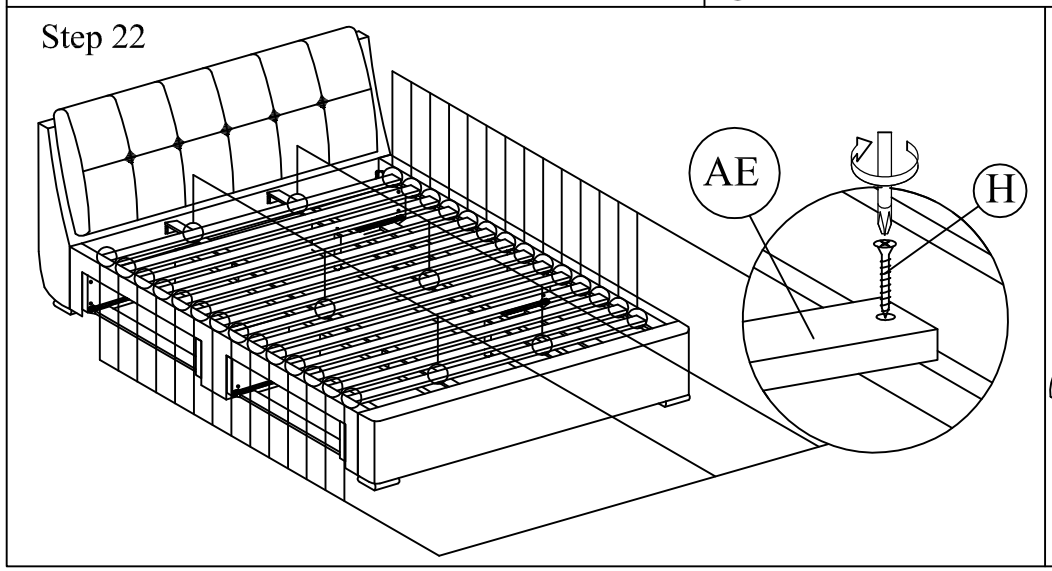
Step 22
AE
H

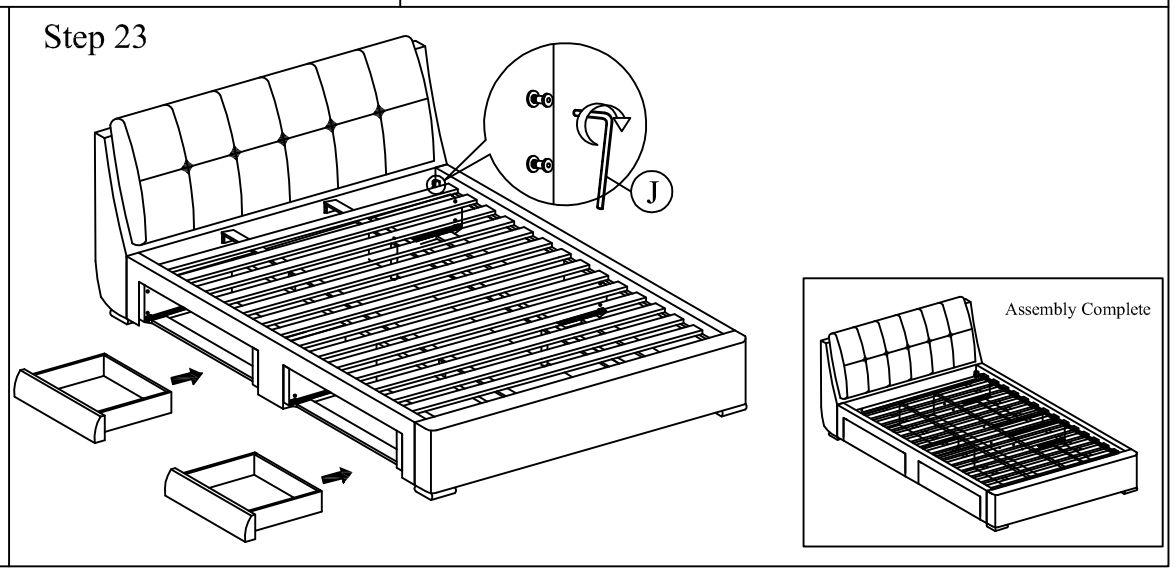
Step 23
J
Assembly Complete