Massage Push Back Chair Accessory Part List

A	B	C	D	E	F	G
Chair base	Backrest	Left and right wing	Power cord	Remote control	Front leg	Back leg

Massage Pushback Chair Assembly Instruction

STEP 1

Take the chair base from the box and turn over it, then screw the front and back legs into the chair base.

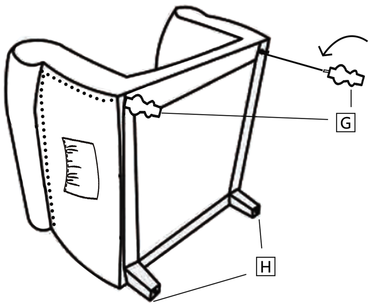

Massage Pushback Chair Assembly Instruction

STEP2

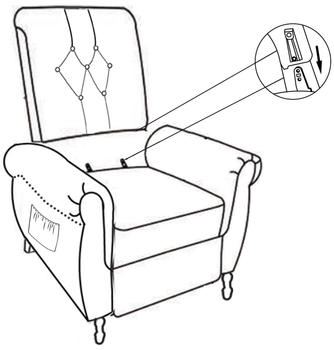

STEP 3

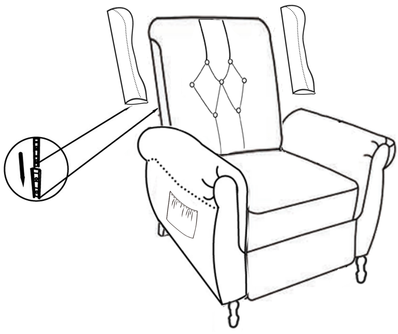

Massage Pushback Chair Assembly Instruction

STEP 4

No.1 and No.2 wire connect with the backrest and chair base.
No.3 wire connects with backrest and power cord(D).
No.4 wire connects with backrest and remote control(E).

NOTE: Two same color wires connect.

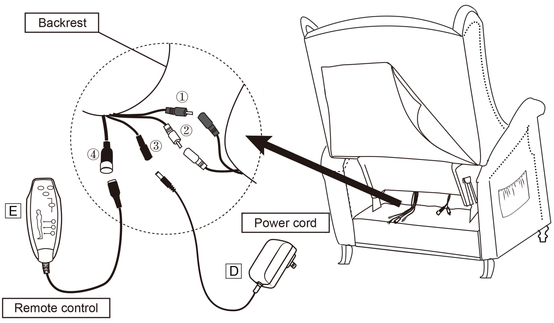

Massage Pushback Chair Assembly Instruction

How to use remote control?

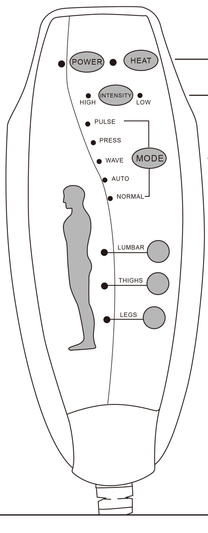

- POWER : Turn on/off remote control
- HEAT : Turn on/off heat function for lumbar part only.
- ITENSIITY : Control massage funcion from low to high
- MODE : Choose one massage mode you like(pulse, press,wave,auto, normal)
- You can choose 1-3 massage parts(lumbar, thighs, legs)to enjoy.