TEAR SHEET

Lazari Single Bath Sconce

Item # ARN 2465HAB-CG



Designer: AERIN

Height: 8.75"
Width: 6"
Extension: 7"
Backplate: 4.5" Round
Finishes: HAB, PN
Glass Options: CG
Socket: E12 Candelabra
Wattage: 5.5 LED G16.5
Weight: 5 Pounds
Note: 120V Configuration Only

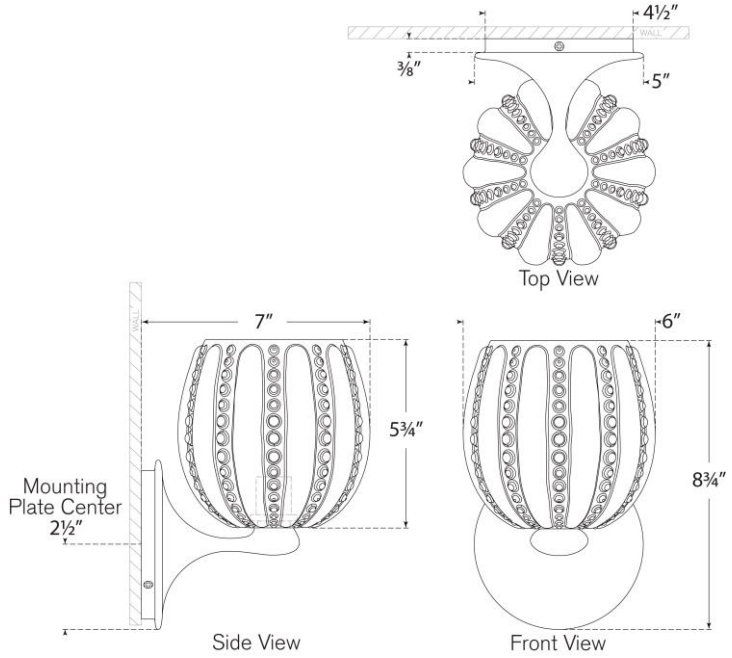

VISUAL COMFORT & CO.