Computer Desk

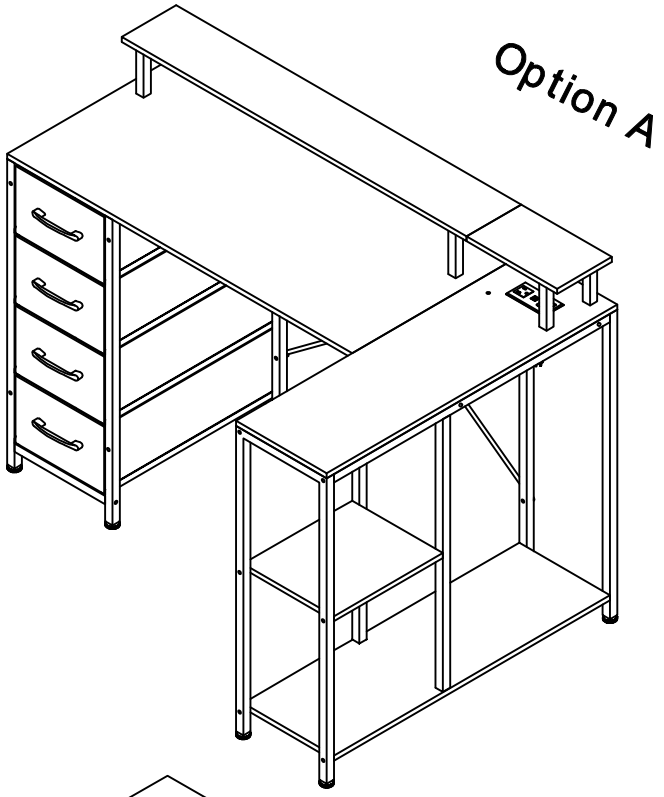

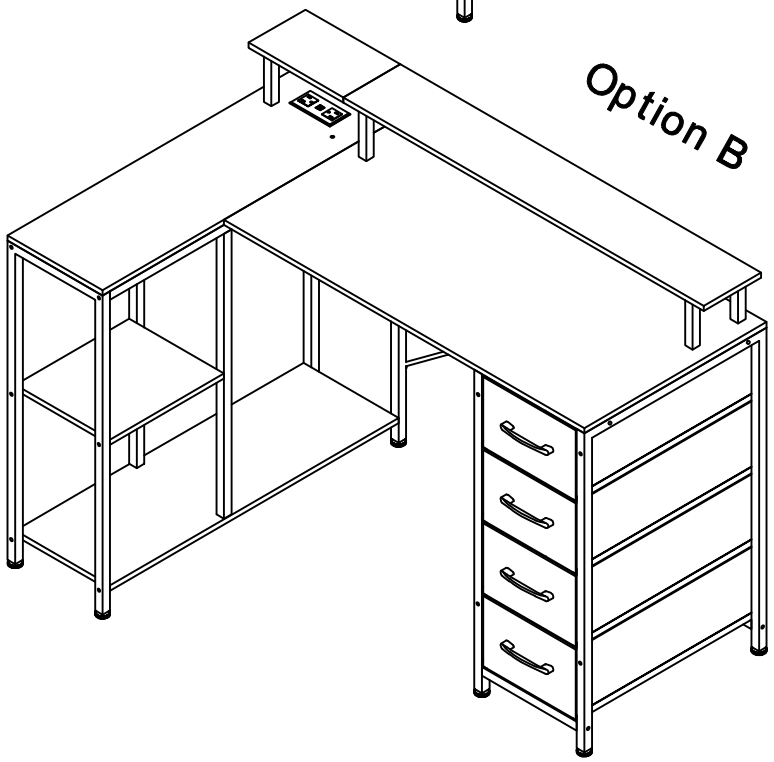

AJ-DJ506136

⚠ Please read this instruction manual carefully before using the product

Package Contents

Plates and iron components	Assembly tool kit	Instruction manual

⚠ Precautions

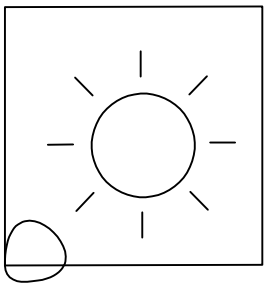

1.Avoid extended periods of direct sunlight exposure.

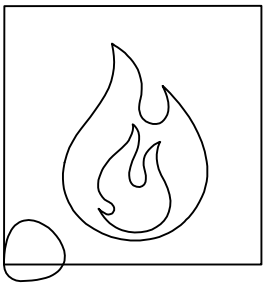

2.Stay away from fire.

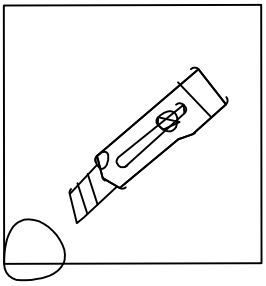

3.Keep away from sharp objects.

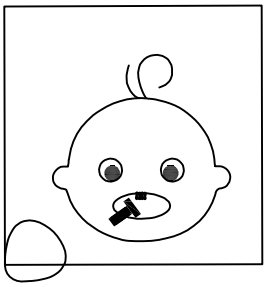

4.Keep infants and children away from assembly parts to avoid choking and suffocation.

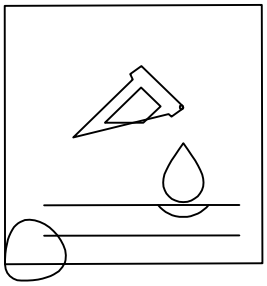

5.Keep away from corrosive substances.

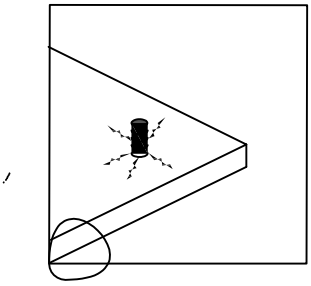

6. Pay attention to avoid over-tightening fasteners, as they may cause cracking within the board.

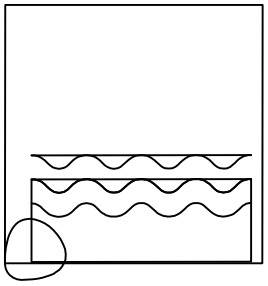

7.Prevent objects from being damaged by immersion in water.

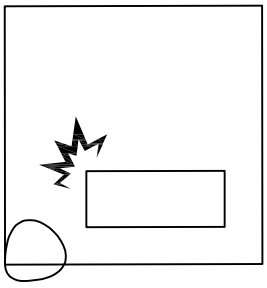

8.Prevent object collision and damage.

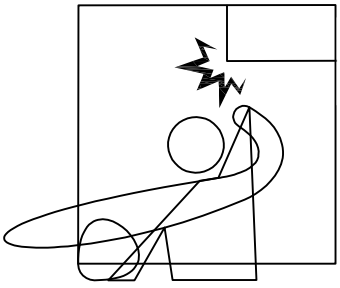

9.Be careful to avoid collisions.

⚠ Installation of Cams and Pins

Be sure to use the proper screws to avoid damaging the parts

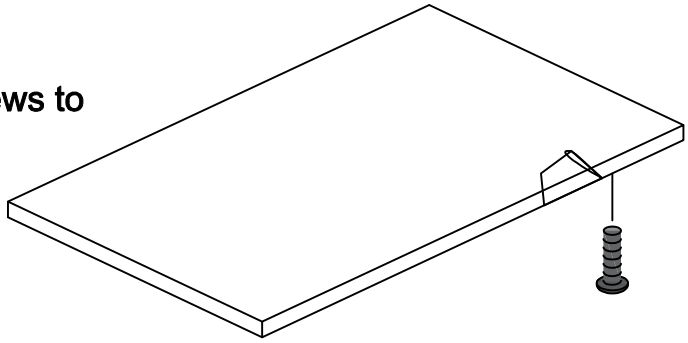

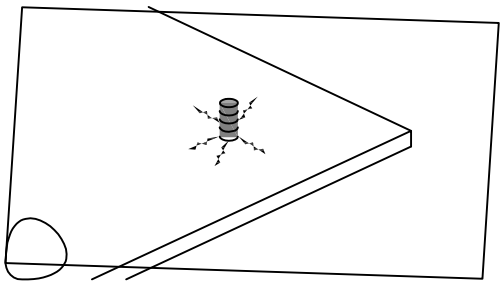

Wrong screws can cause the plank to crack

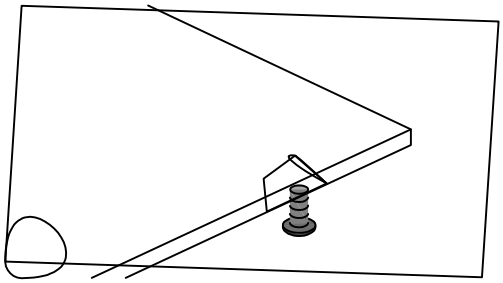

The right screw is the right size

⚠ Matters needing attention

1. When installing the screws in the installation step, the screws do not need to be tightened.

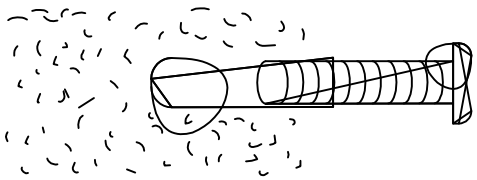

2. After this installation step is confirmed and the holes are aligned, then tighten all the screws.

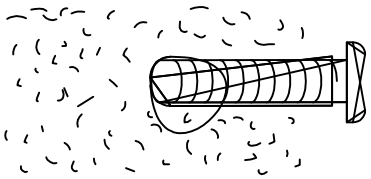

3. If the screws are tightened during the installation process, it will cause problems such as misalignment of the screw holes and misalignment of the board in subsequent installations

LotusLantern APP

1. Overview

LotusLantern is a mobile APP to control LED strip by both IOS and Android phones.
The traditional control ways like infrared, 433MHz, 2.4GHz and others old wired ways will be replaced by mobile phone control way with convenient, powerful and scalable features.

Through this mobile APP , you can not only control the color, brightness and color temperature of the LED strips but also set up all kinds of fancy flash mode ; Also this APP can change the light of the LED strip according to the rhythm of the music. This APP can set and control several LED strips through Bluetooth and the operation is very simple, easy to learn and easy to use.

2. Operating Environment

This APP program requires phones of system above Andriod 4.3 and IOS 8.0. Mobile phone configuration is not limited.

3. Download

Note: Android version and IOS version download and use the same method, here in the Android version as an example.

Scan the QR code

IOS and Android systems can download the "LotusLantern" APP by scanning the QR code. Open the browser or other tools with "Scan QR code" function, scan the "LotusLantern" QR code as below:

Disassembly Diagram

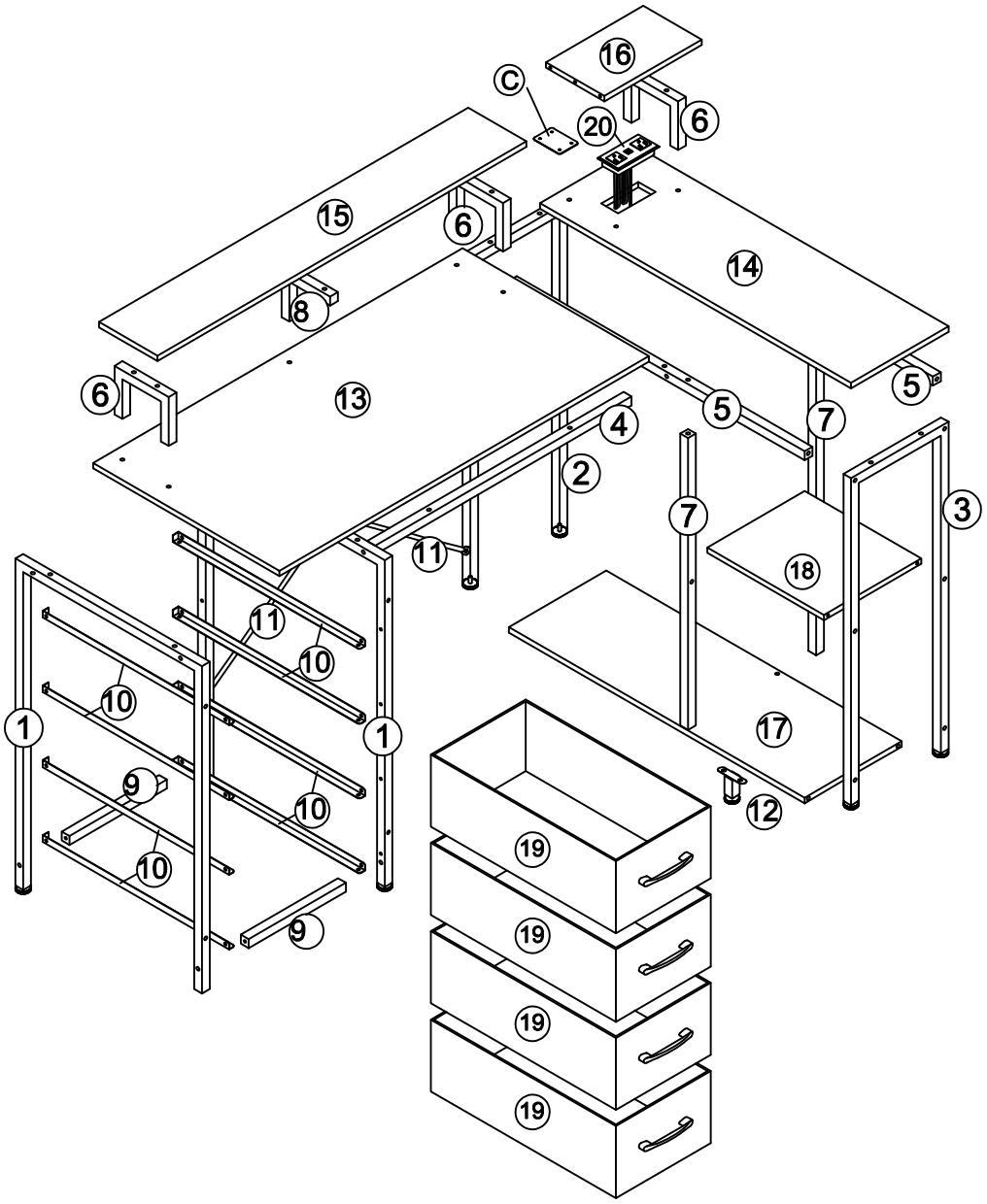

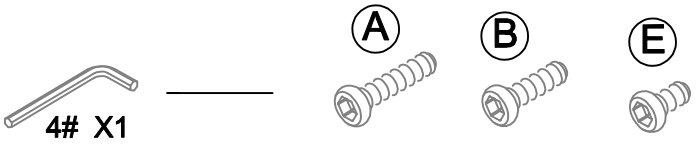

4# X1

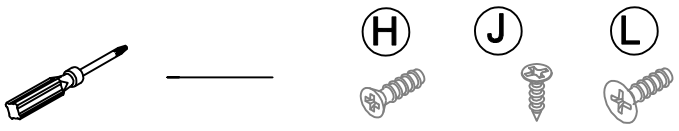



3# X1

1 X 2 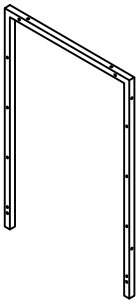	2 X 1 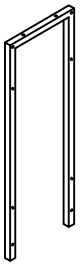	3 X 1 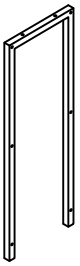	4 X 2 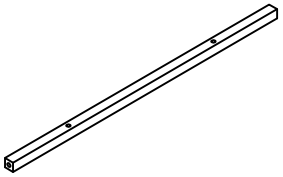
5 X 2 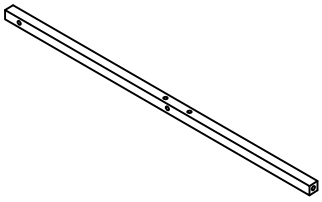	6 X 3 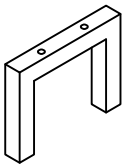	7 X 2 	8 X 1 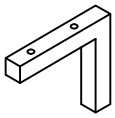
9 X 2 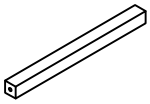	10 X 8 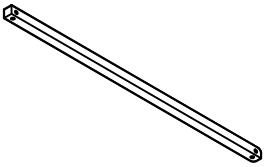	11 X 1 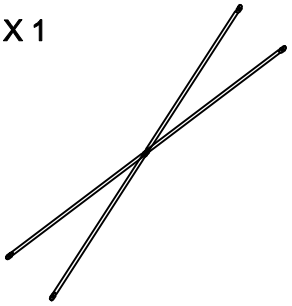	12 X 1 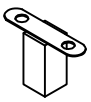
13 X 1 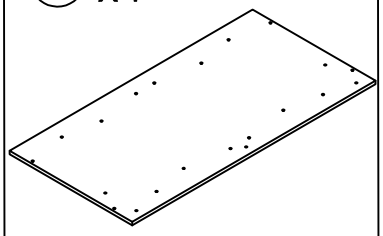	14 X 1 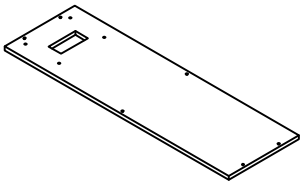	15 X 1 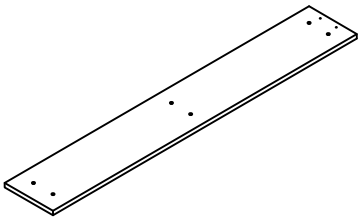	16 X 1 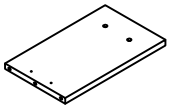
17 X 1 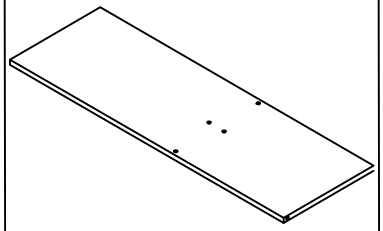	18 X 1 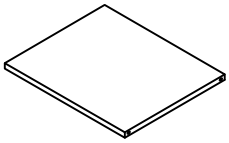	19 X 4 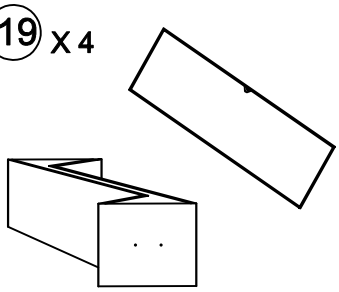	20 X 1 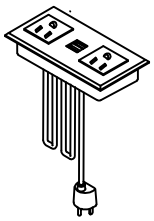
21 X 1 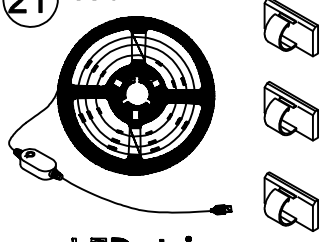 LED strip			

Tool sheet

A X 16+2 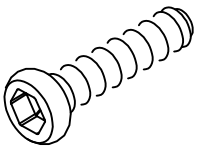 M6*35	B X 29+3 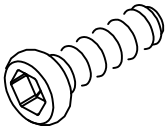 M6*28	C X 1 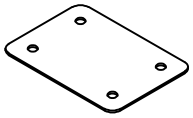	D X 8+1 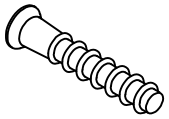 5*40
E X 10+2 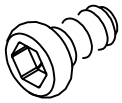 M6*10	F X 6 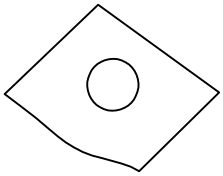	G X 3+1 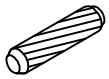	H X 16+2 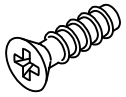 M4*10
I X 9+1 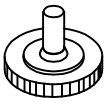	J X 2+1  3.5*12	K X 4 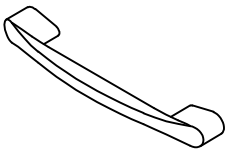	L X 8+1 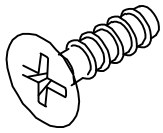 M4*12
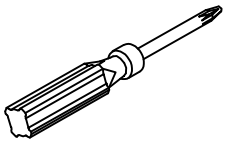	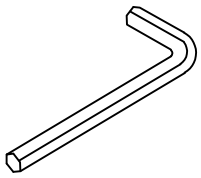 4 #	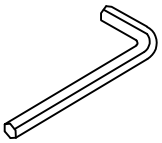 3 #	

Assembly Instruction

1

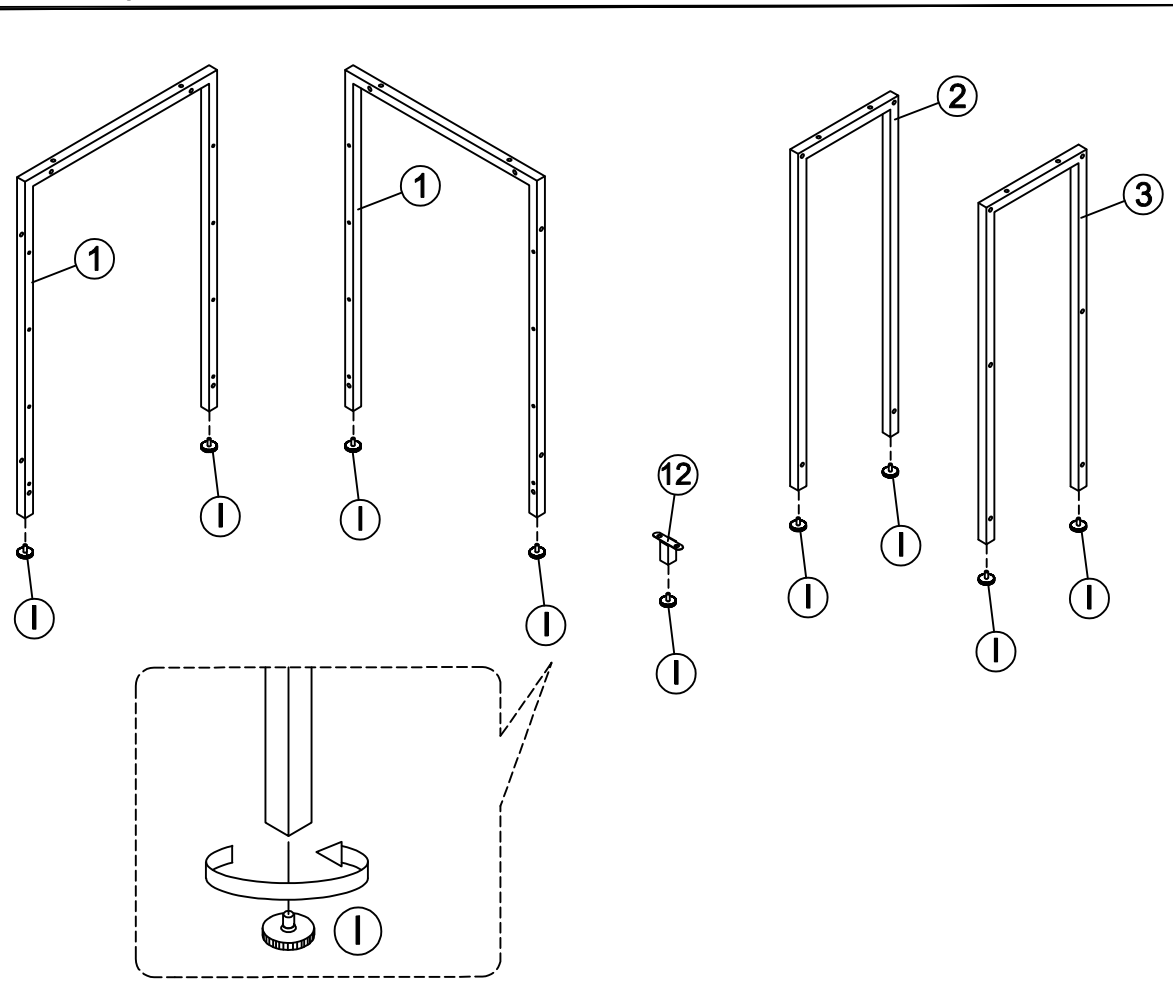

I x 9



2

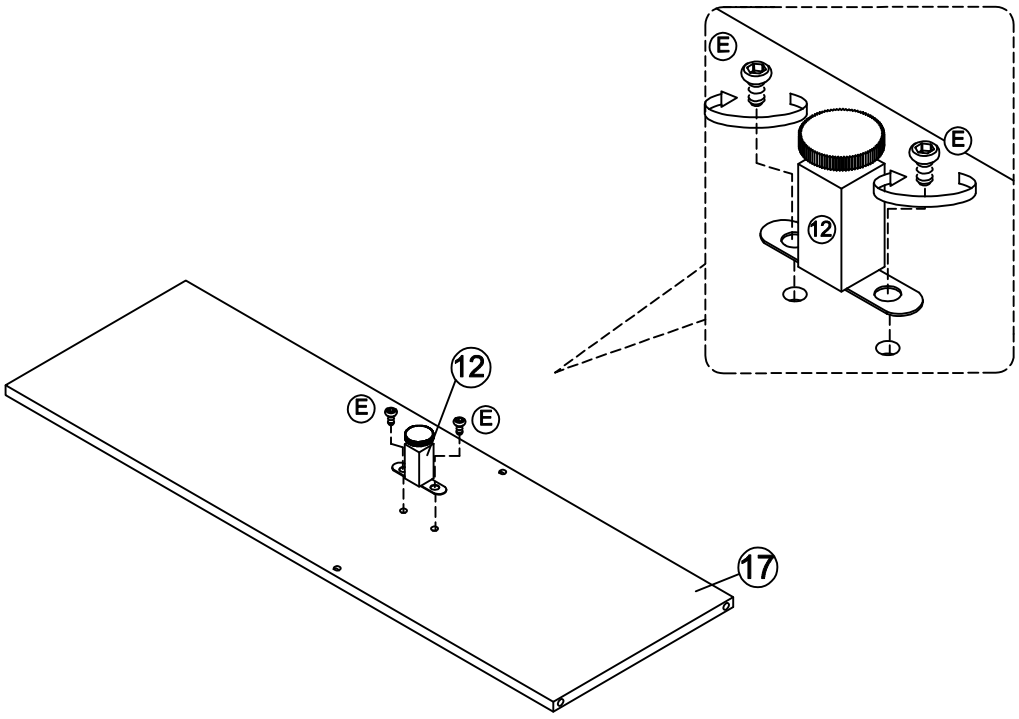

E X 2



M6*10



4#

Assembly Instruction

3

D X 4	
5*40	3#

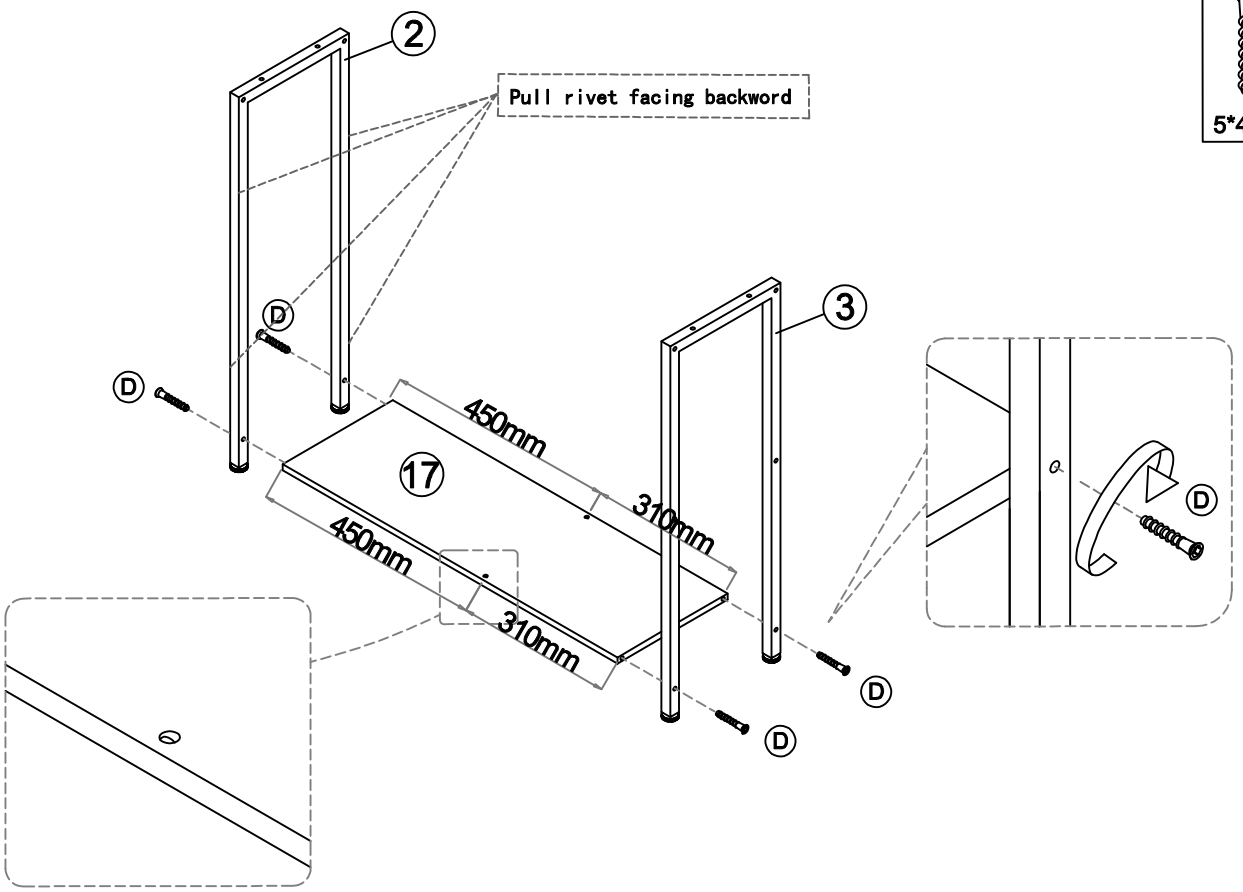

4

A X 2	
M6*35	4#

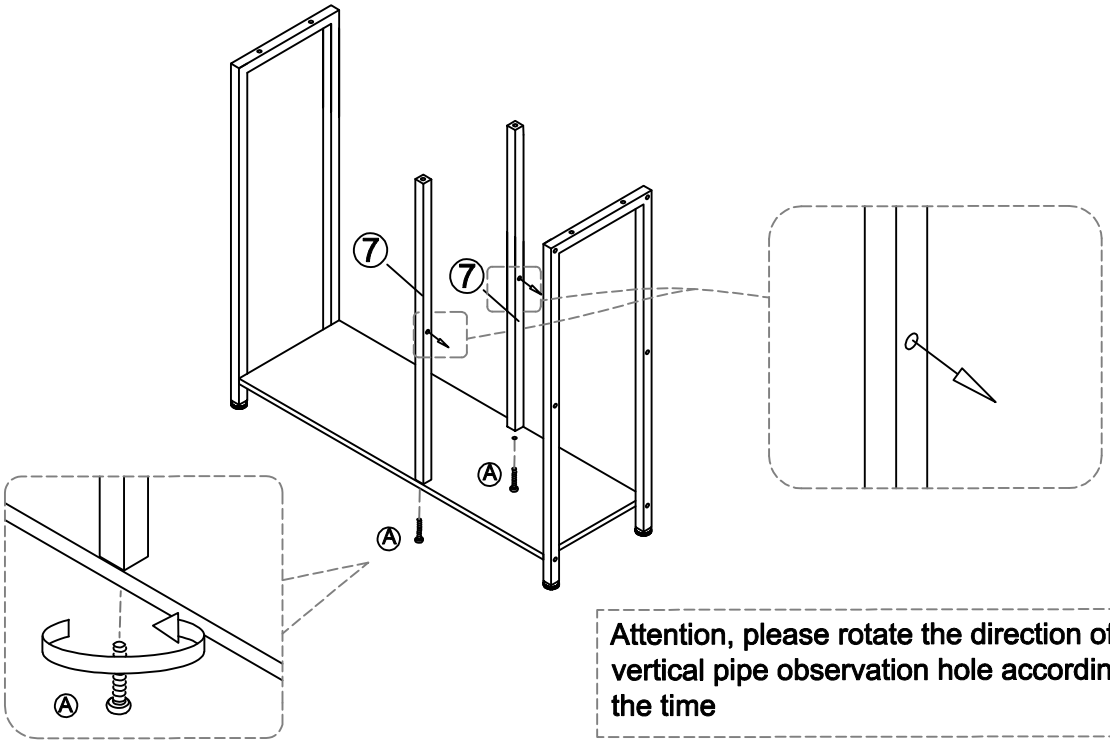

Attention, please rotate the direction of the vertical pipe observation hole according to the time

Assembly Instruction

5

D X 4

5*40

3#

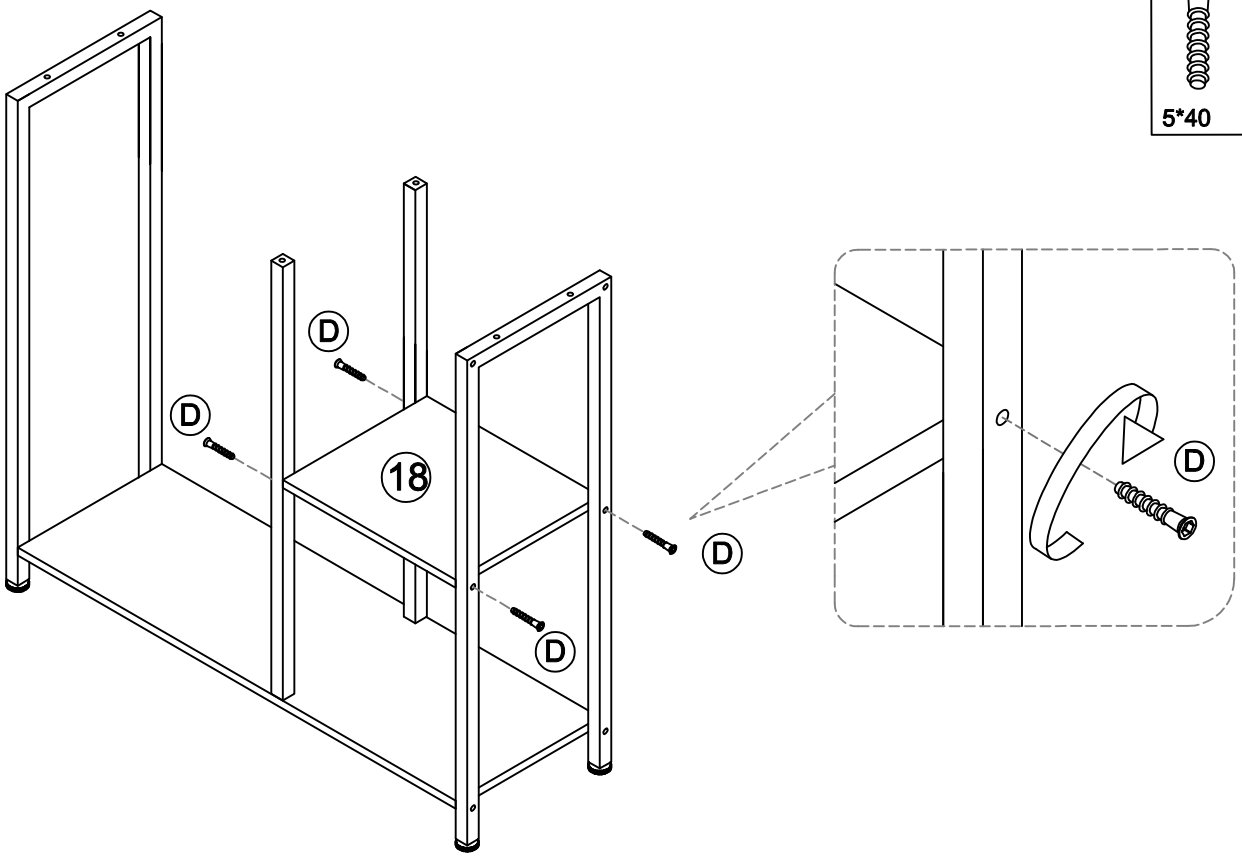

6

A X 6

M6*35

4#

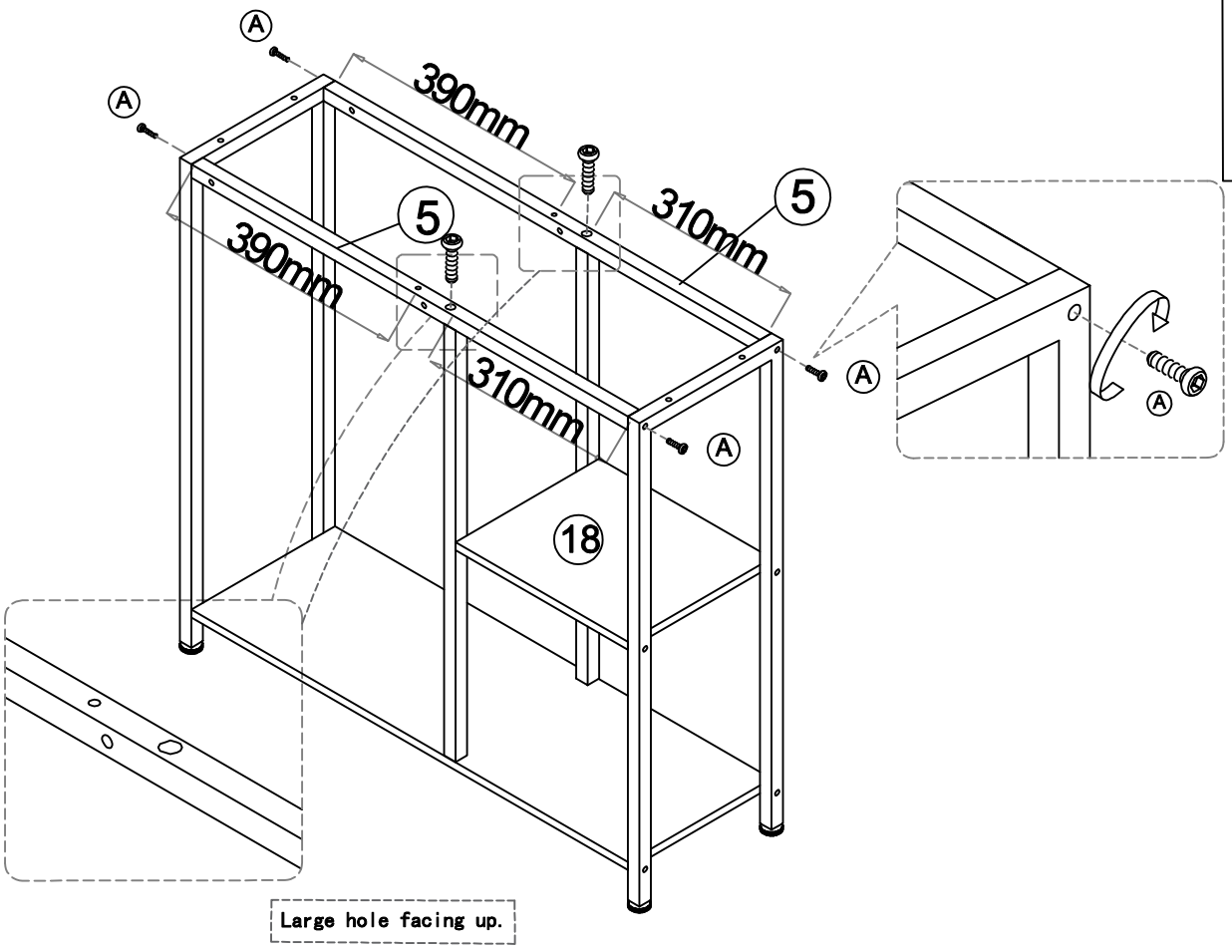

Assembly Instruction

7

G X 3	E X 4
	
	M6*10

8

A X 4	
	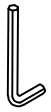
M6*35	4#

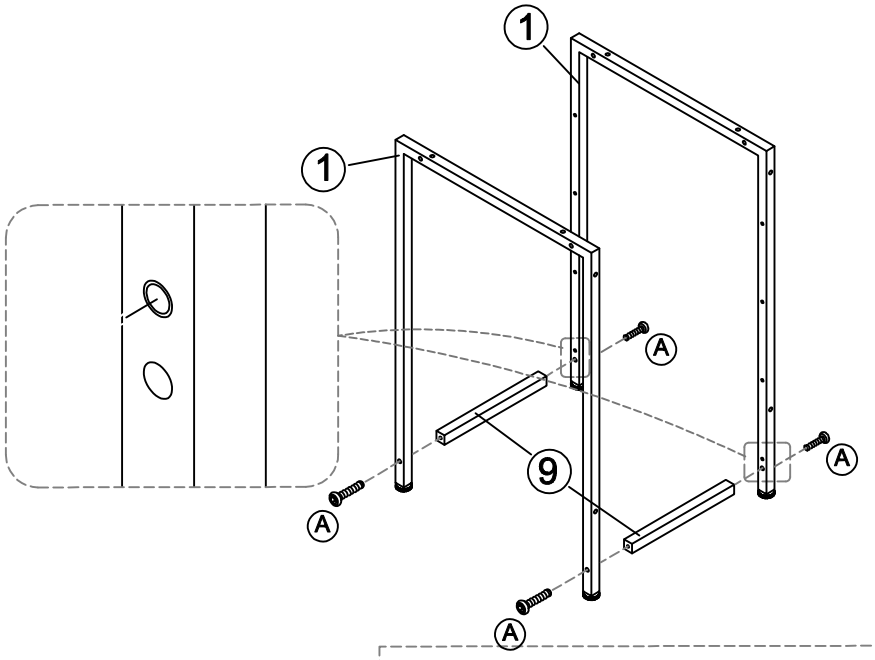

Note that after the assembly of the holes, the screw holes are also facing inward

Assembly Instruction

9

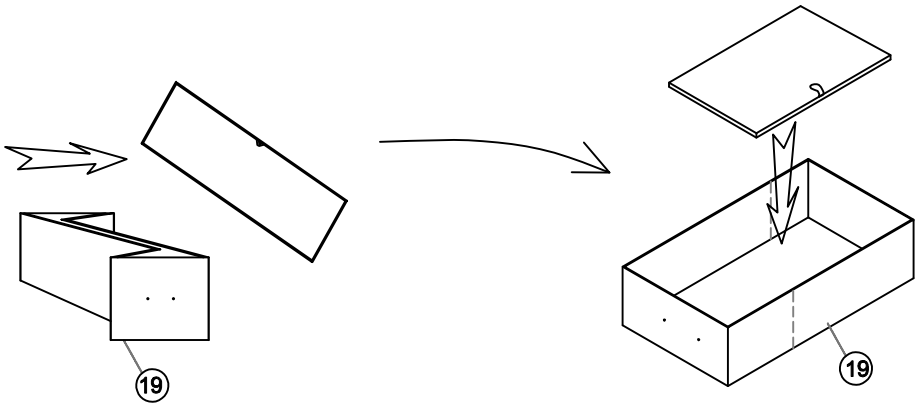

x 4

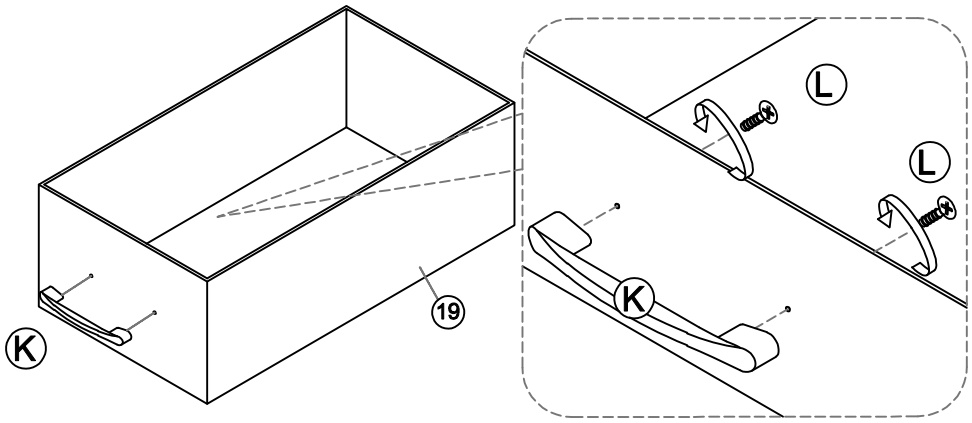

K X4 | L X8 M4*12

10 Option A
P11~P16

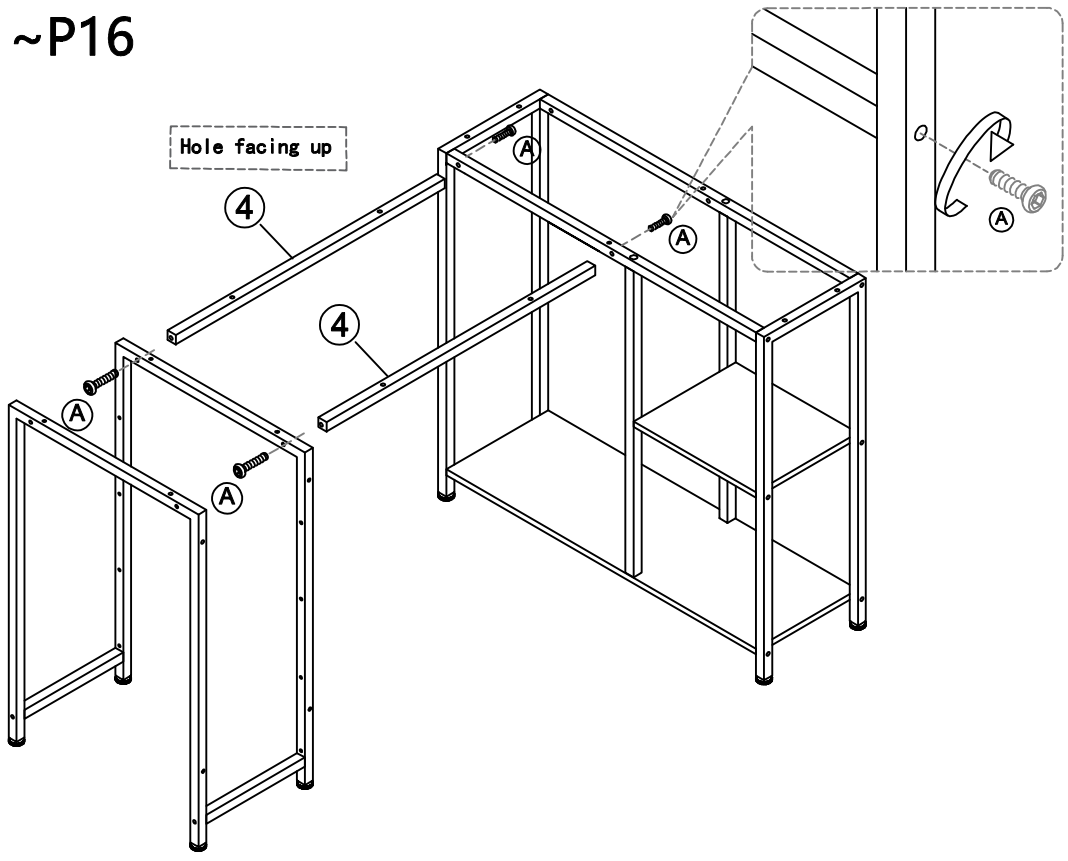

A X4 M6*35 | 4#

Assembly Instruction

11 Option A

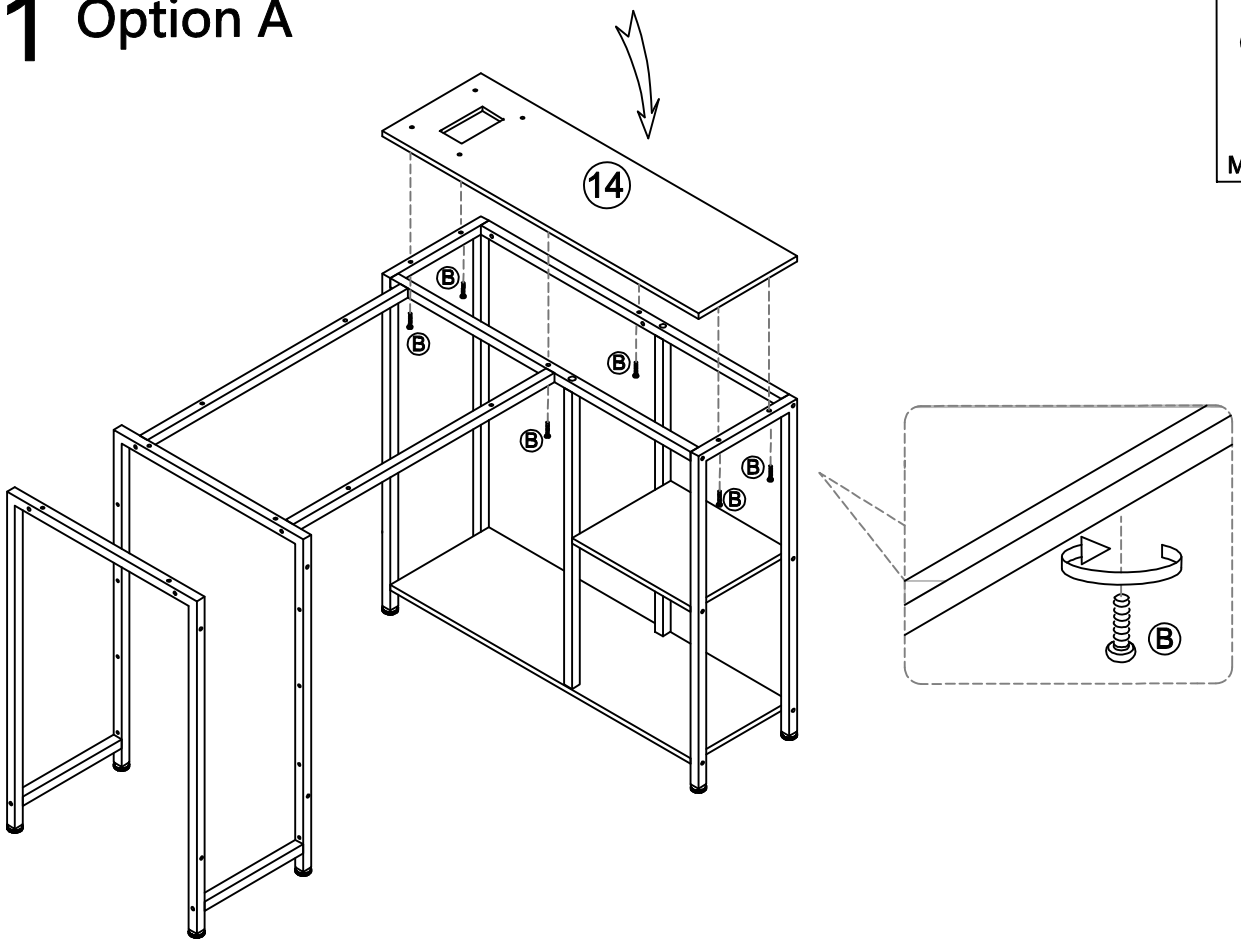

B X 6	
M6*28	4#

12 Option A

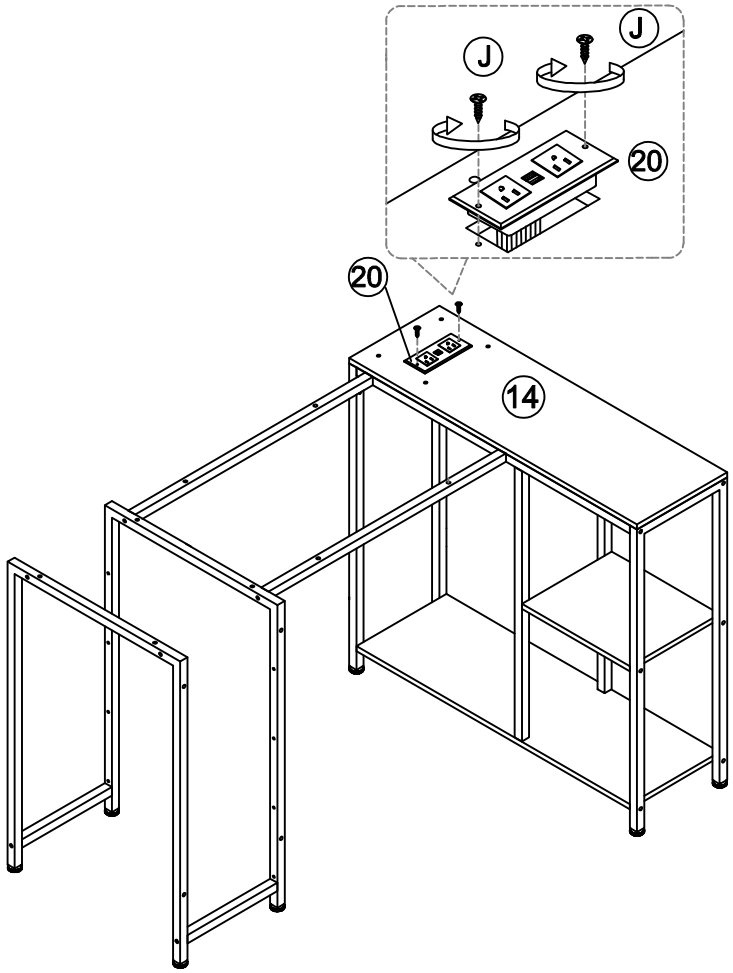

J X 2
3.5*12

Assembly Instruction

13 Option A

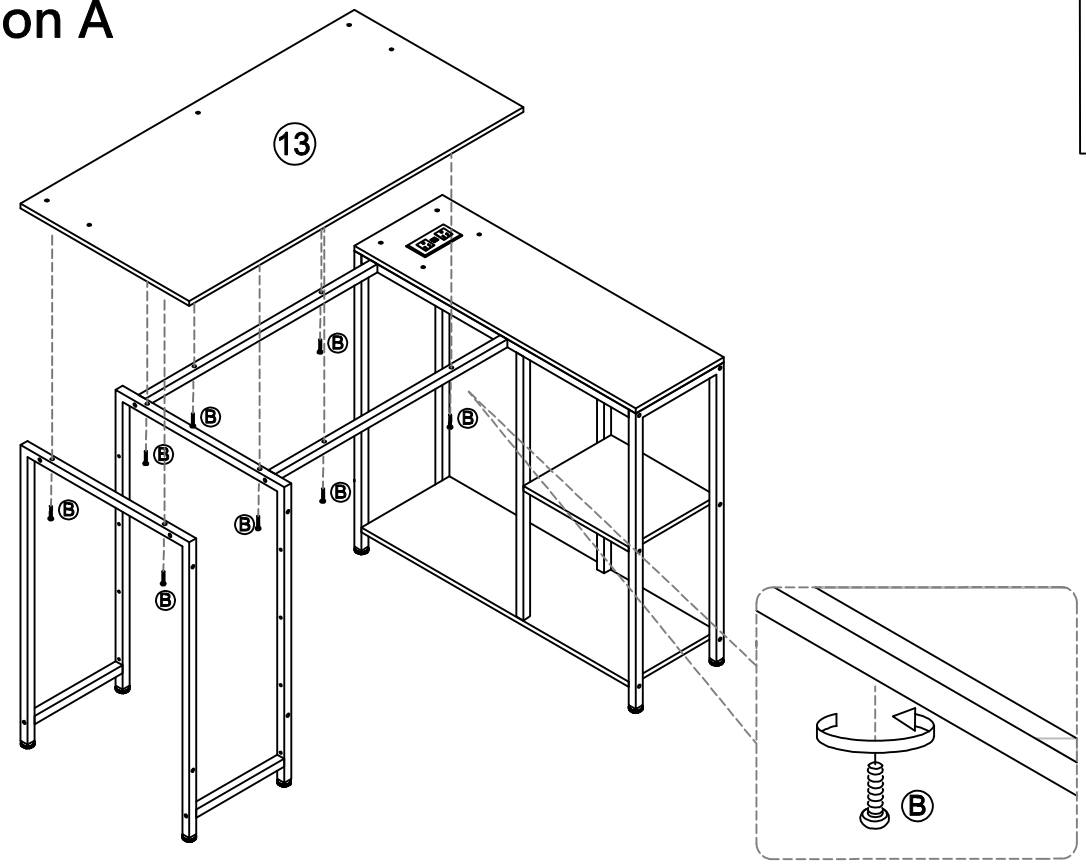

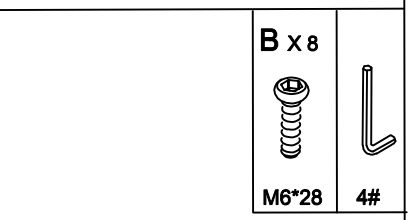

14 Option A

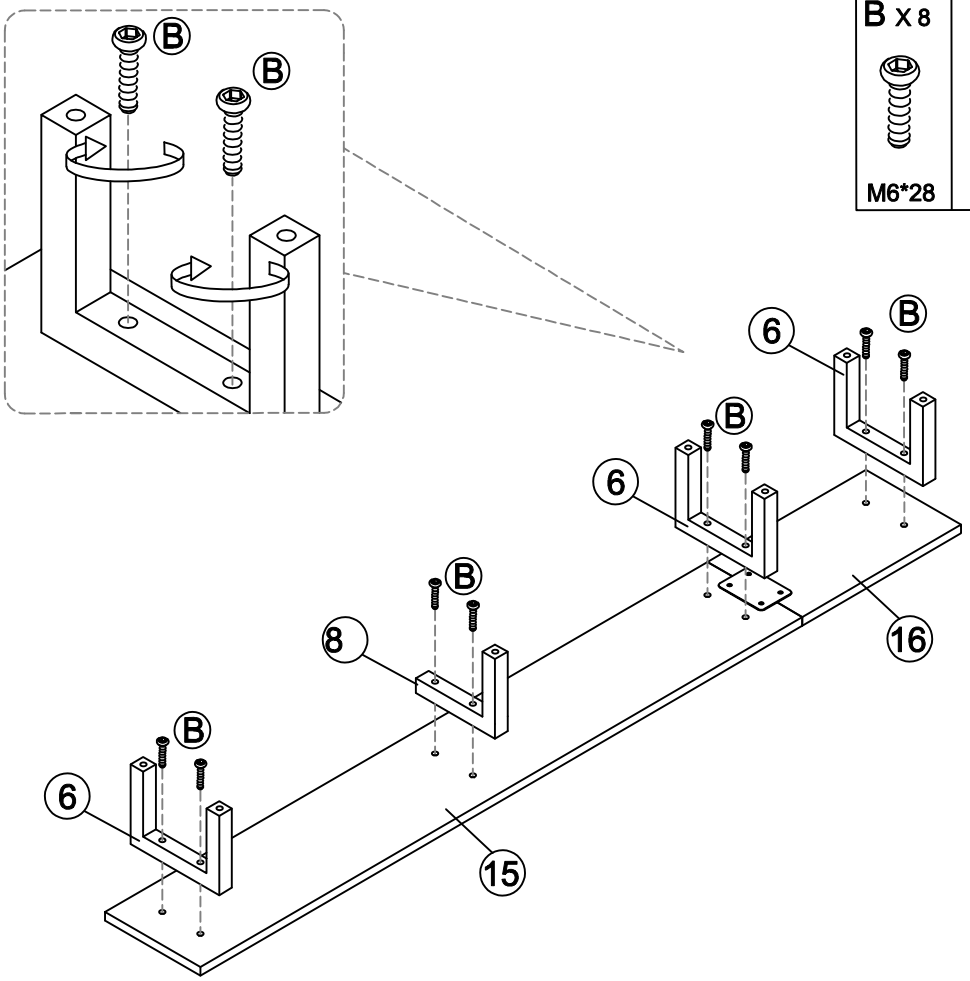

Assembly Instruction

15 Option A

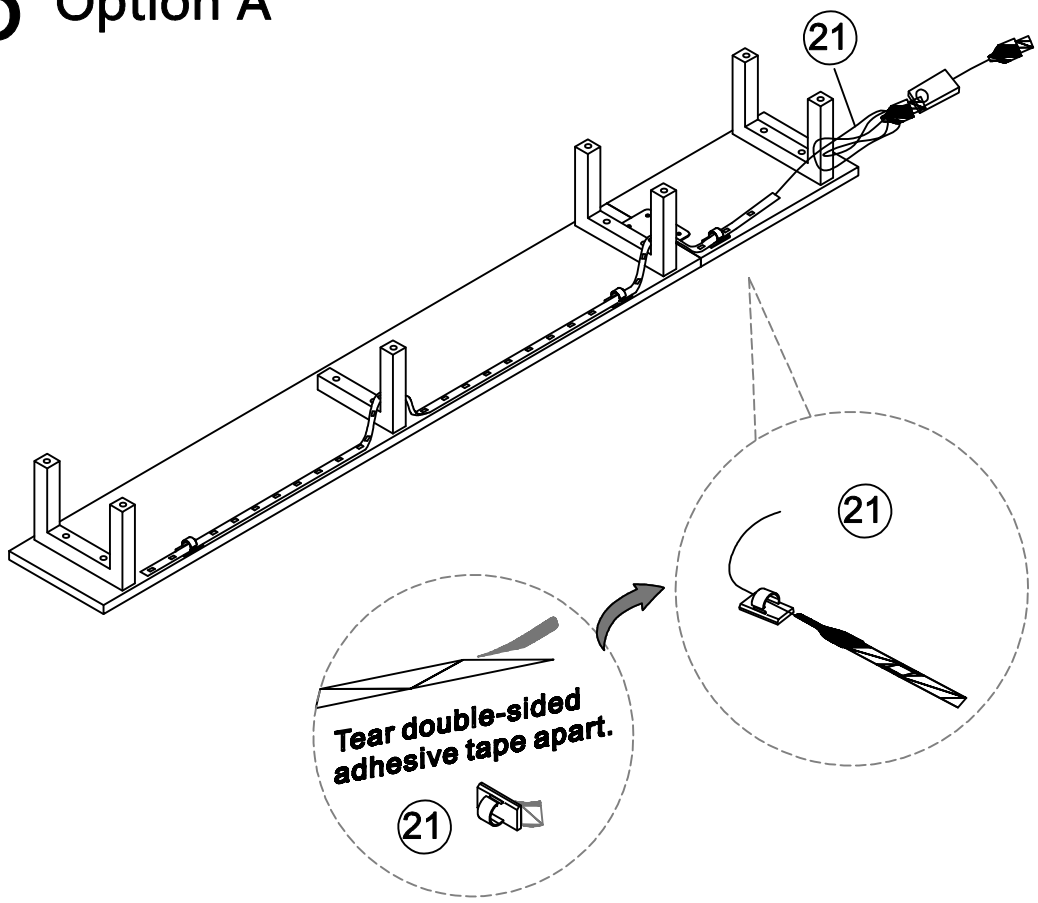

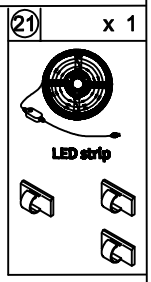

16 Option A

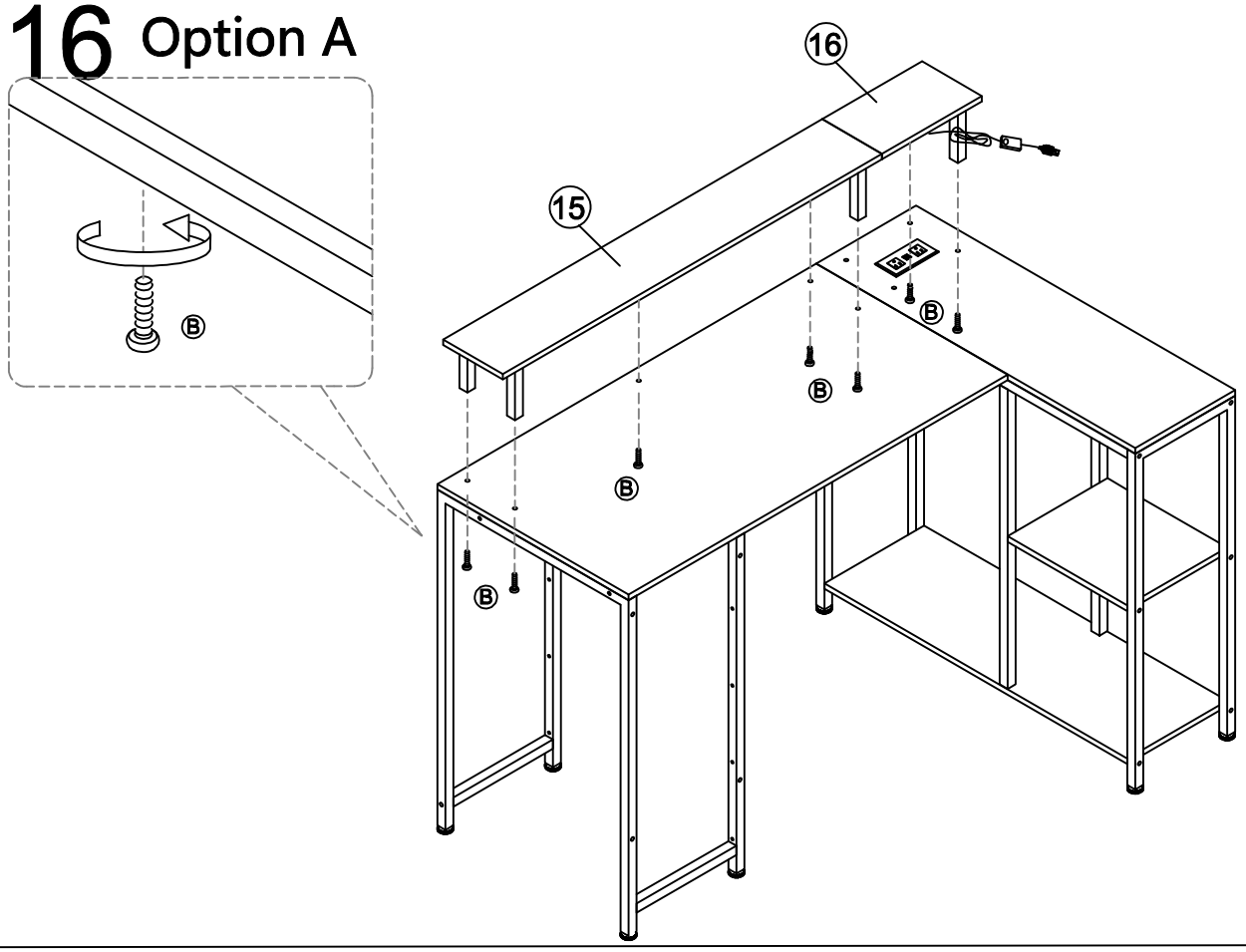

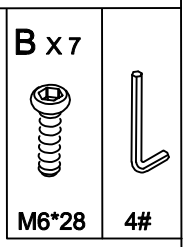

Assembly Instruction

17 Option A

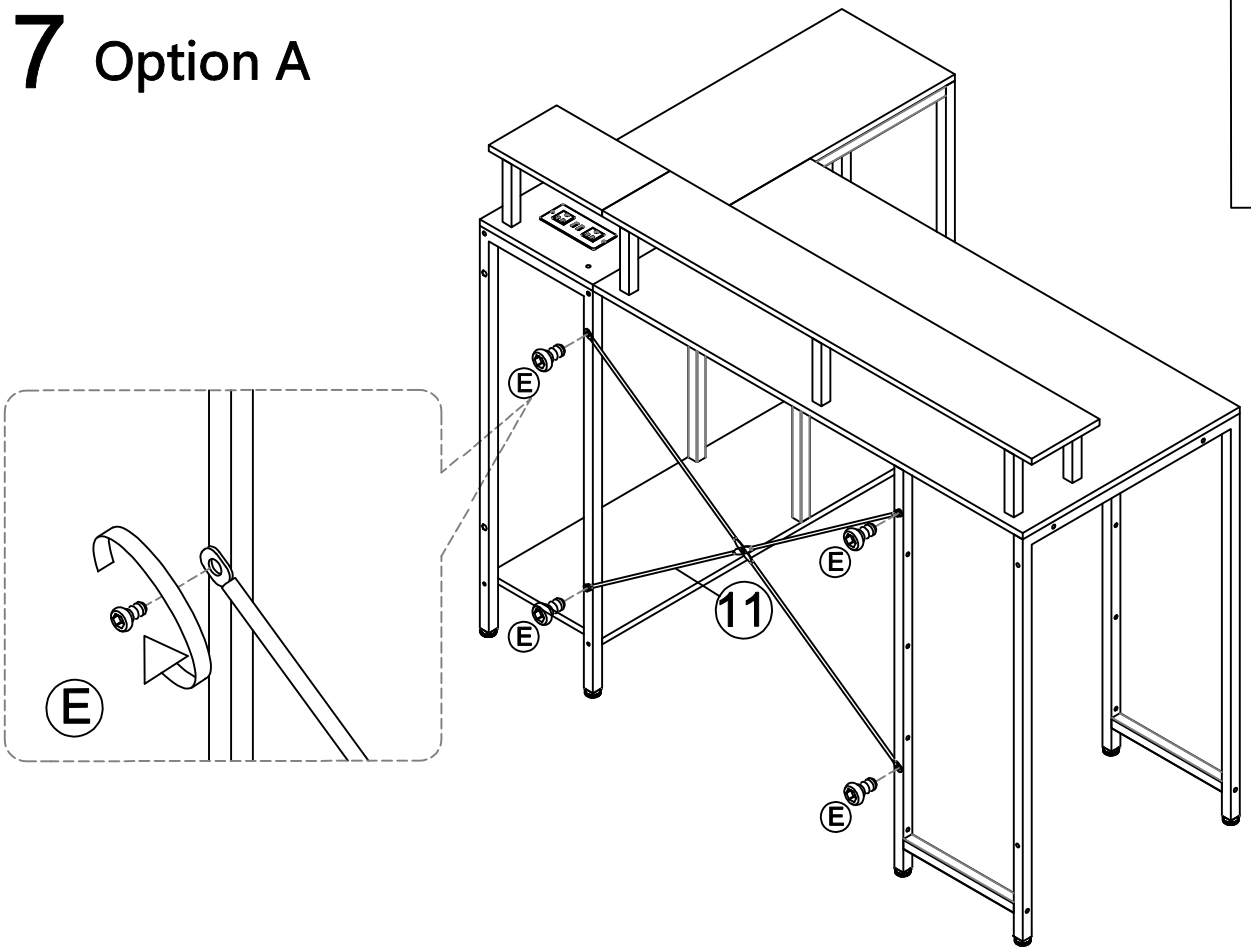

E X 4	
M6*10	4#

18 Option A

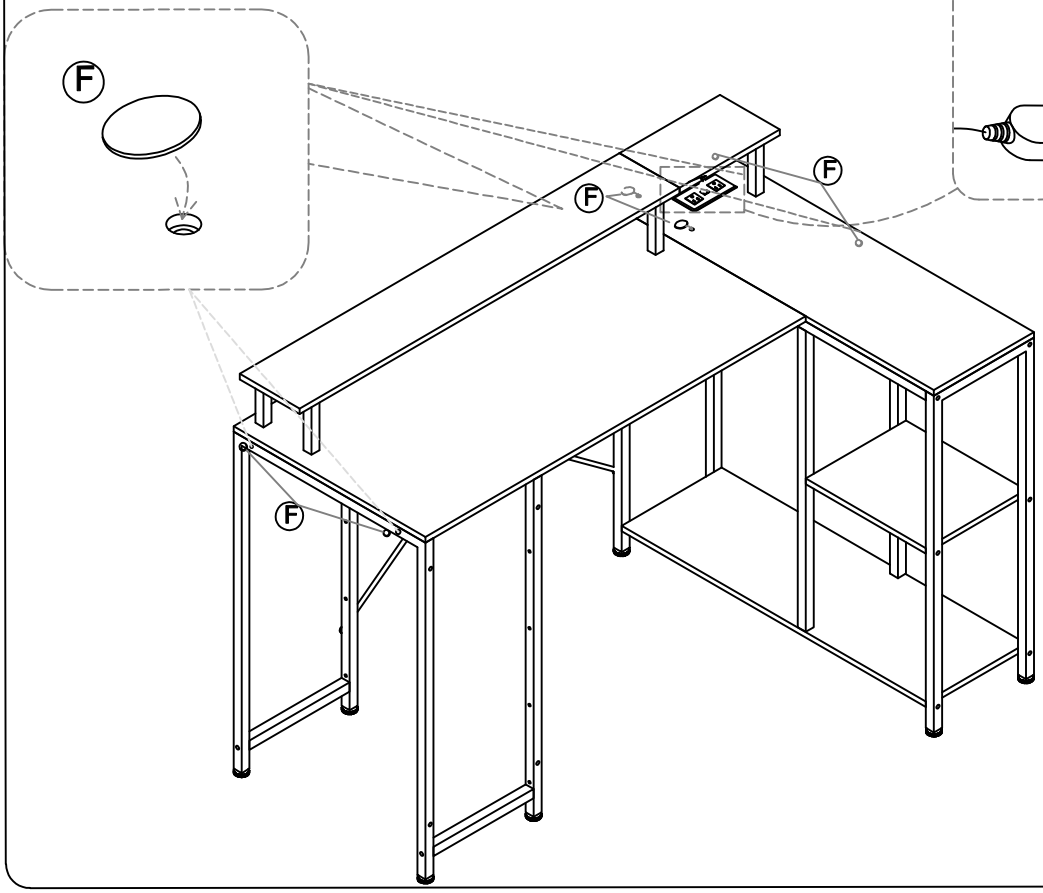

F X 6

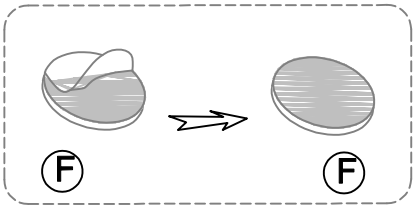

19 Option A

H X 16

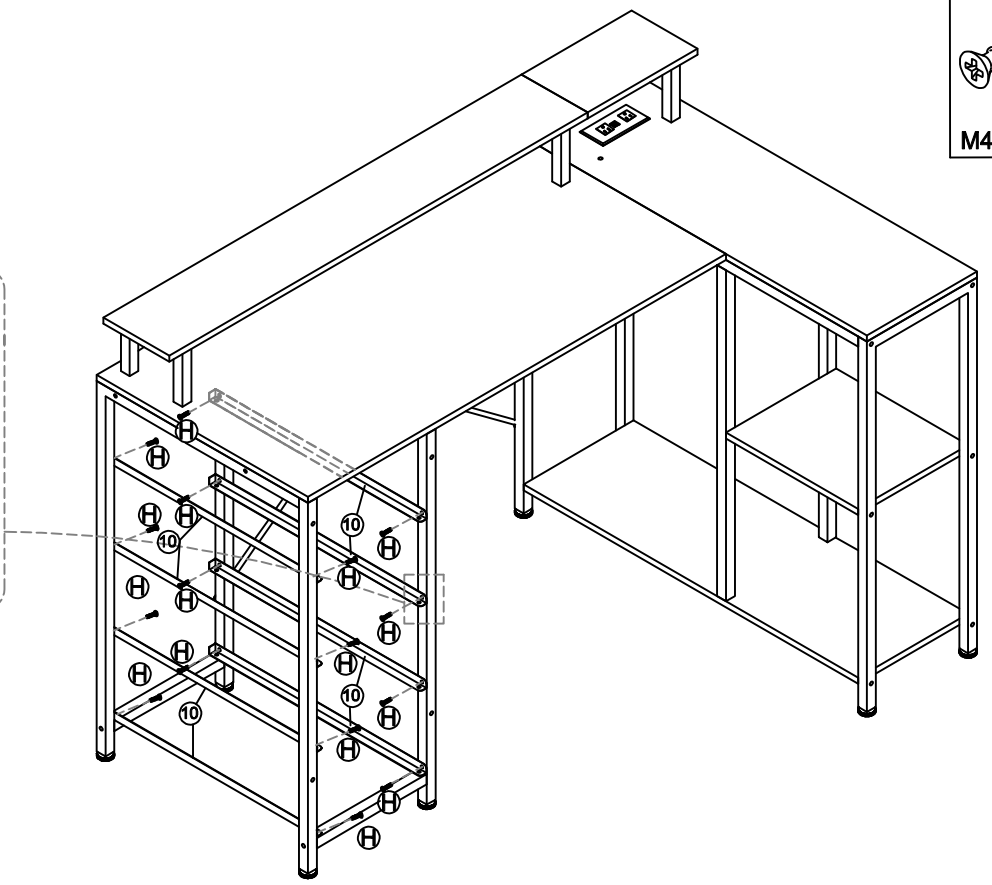

20 Option A

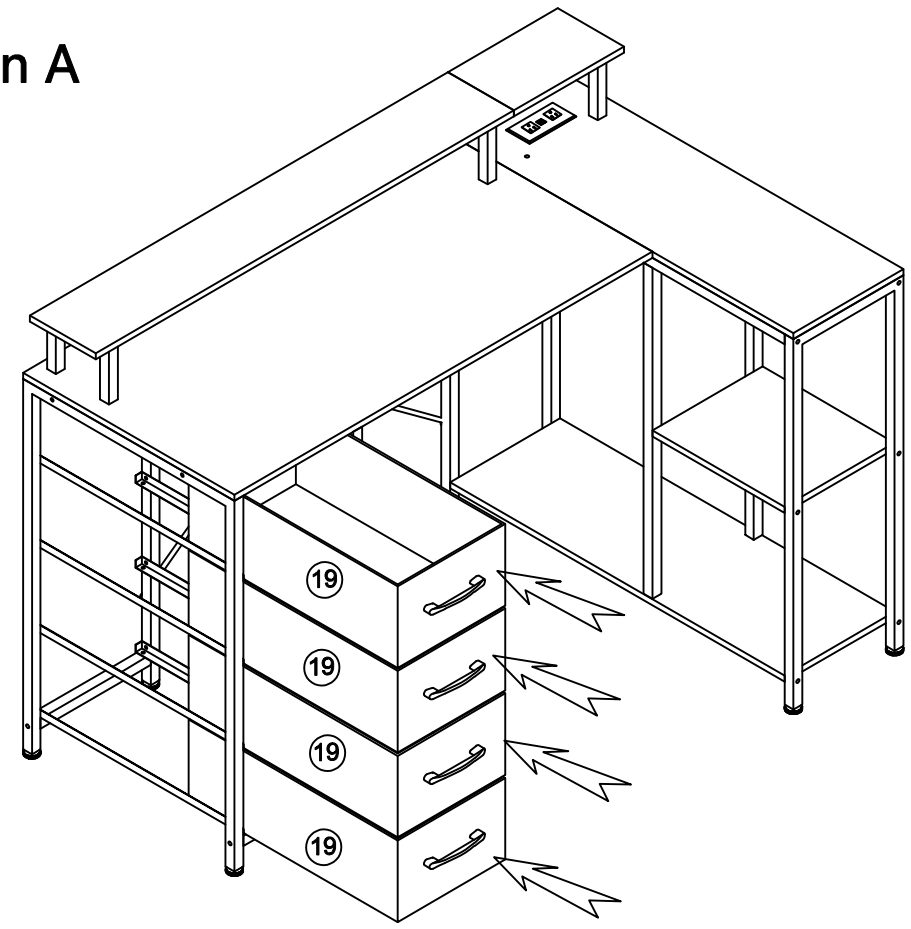

21 Option B
P17~P23

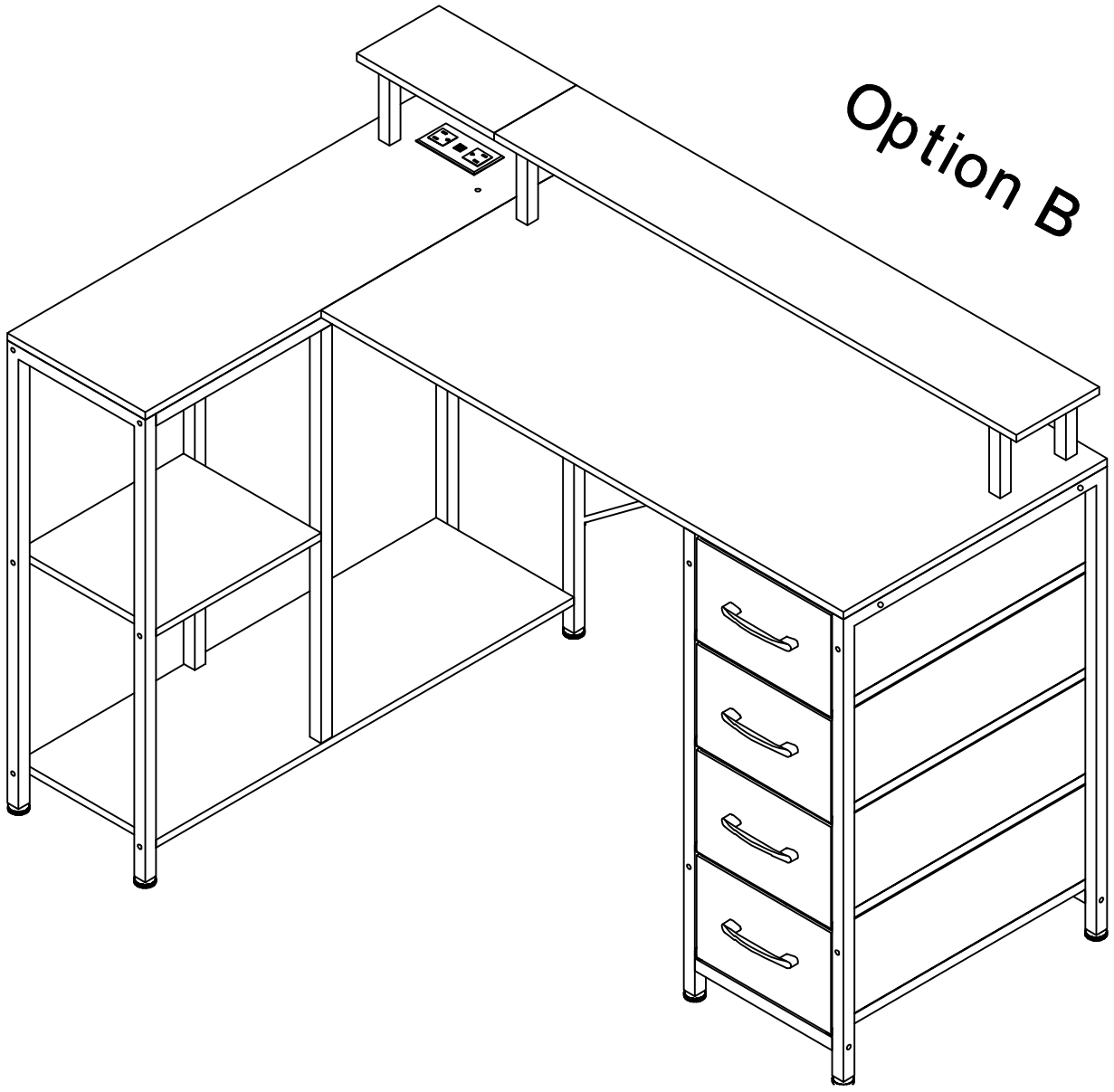

Assembly Instruction

22 Option B

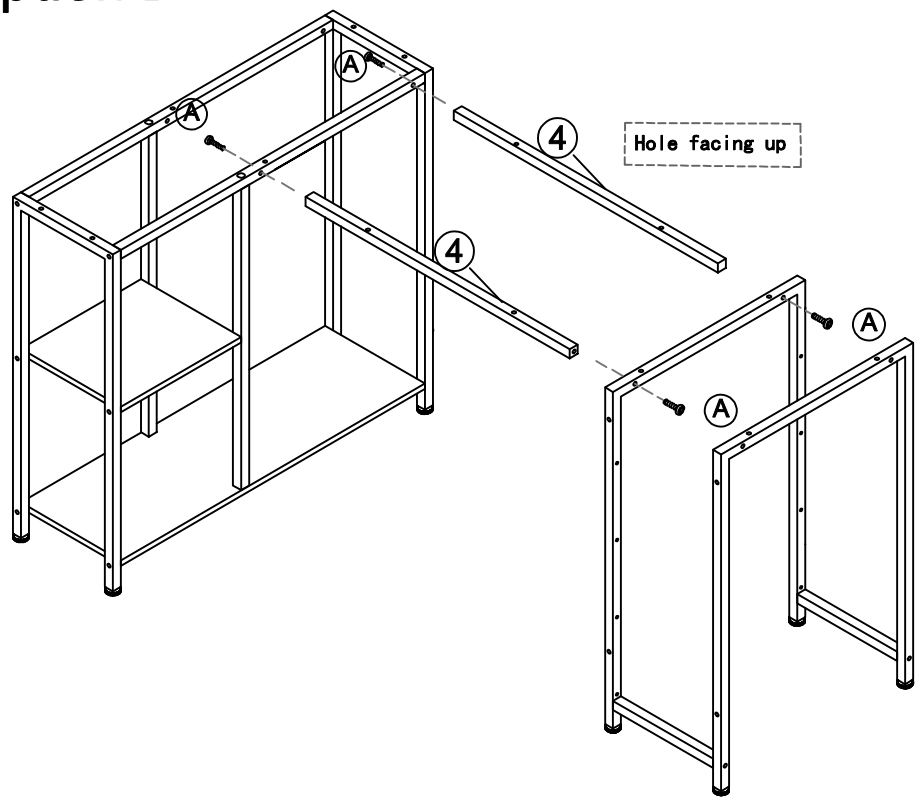

A X 4	
M6*35	4#

23 Option B

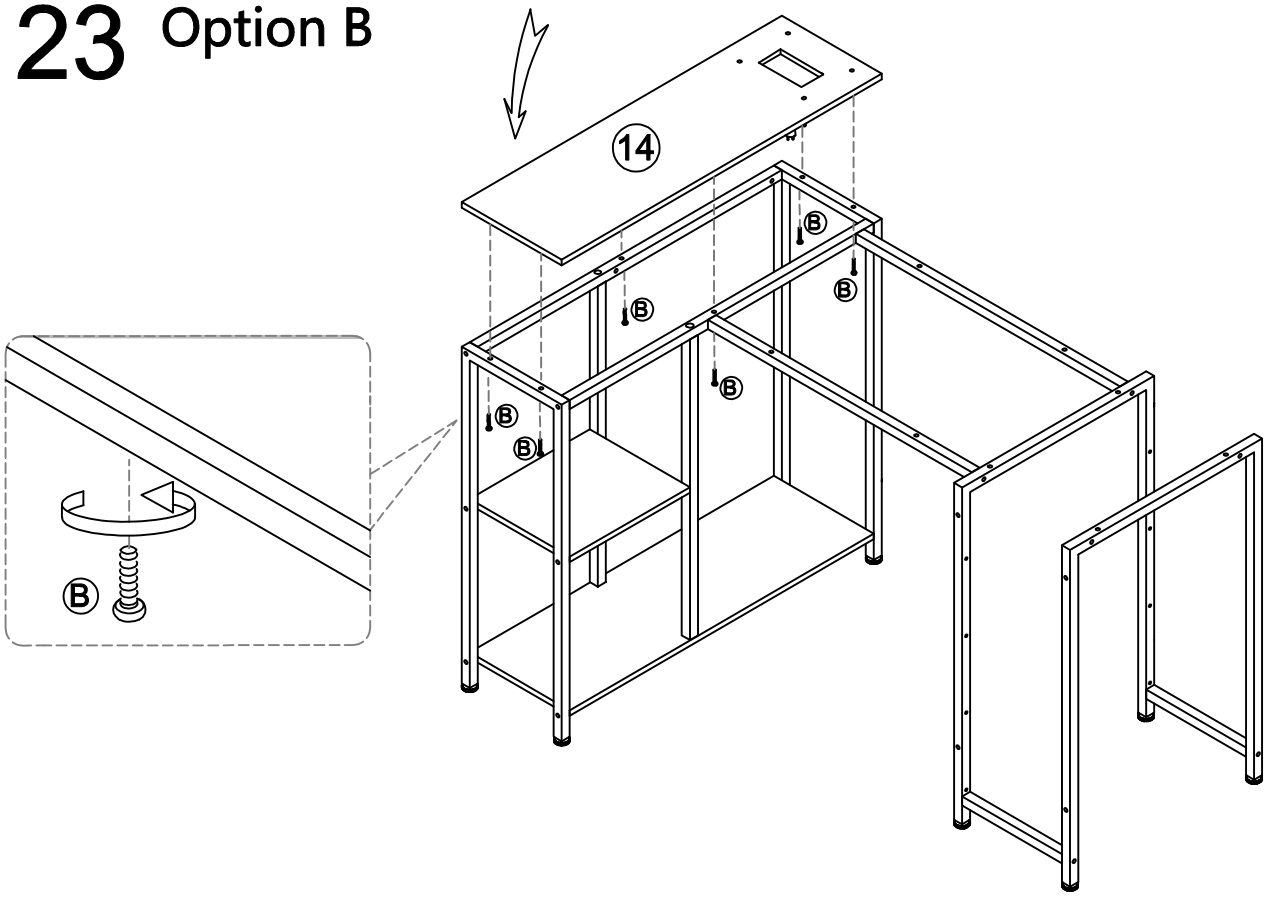

B X 6	
M6*28	4#

24 Option B

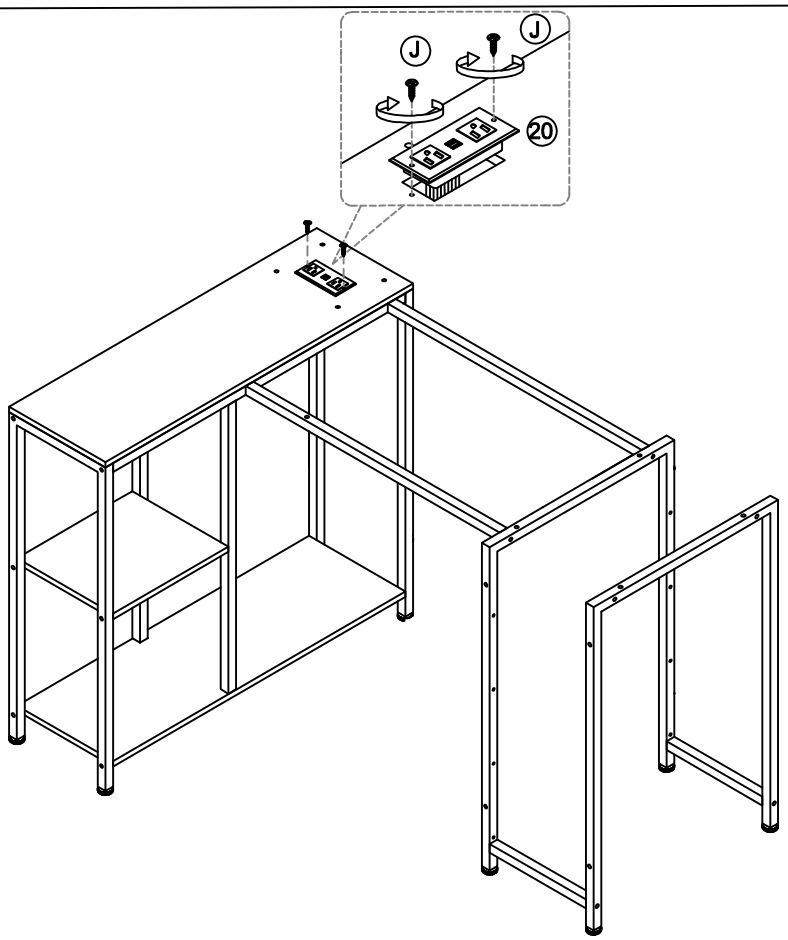

J X 2

3.5*12

25

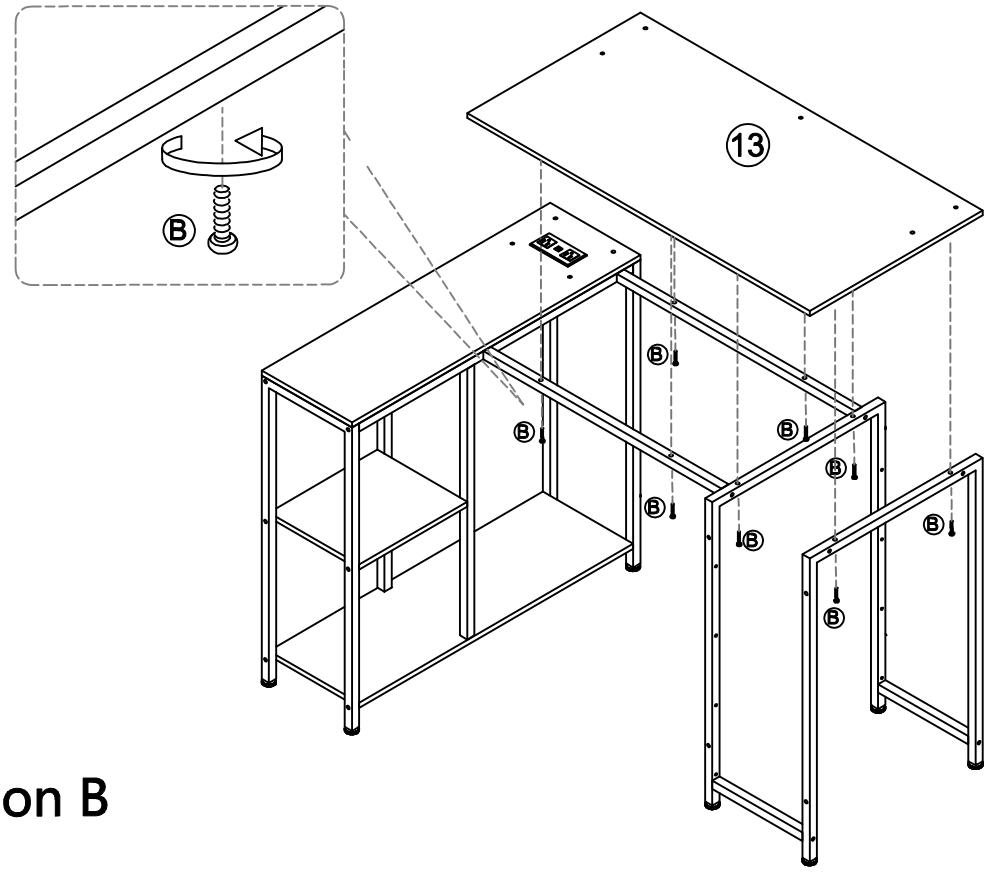

B X 8

M6*28

4#

Option B

26 Option B

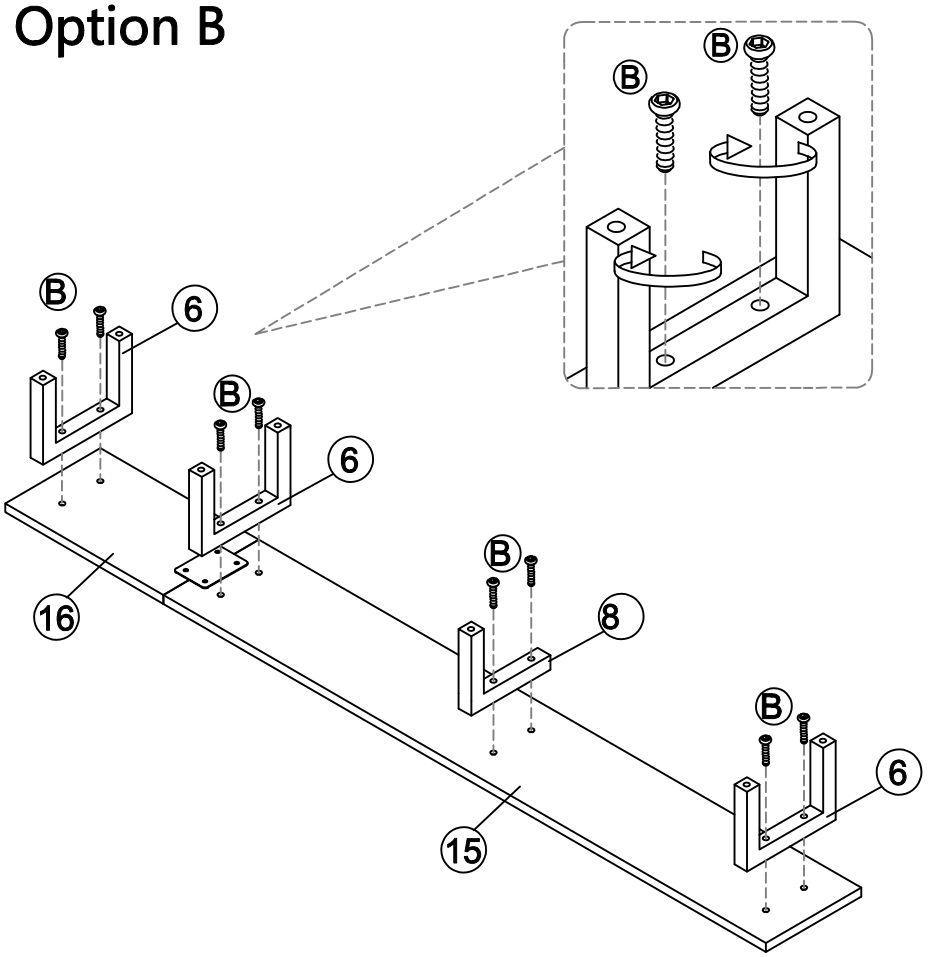

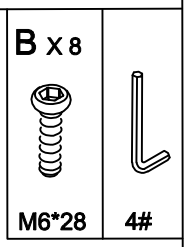

27 Option B

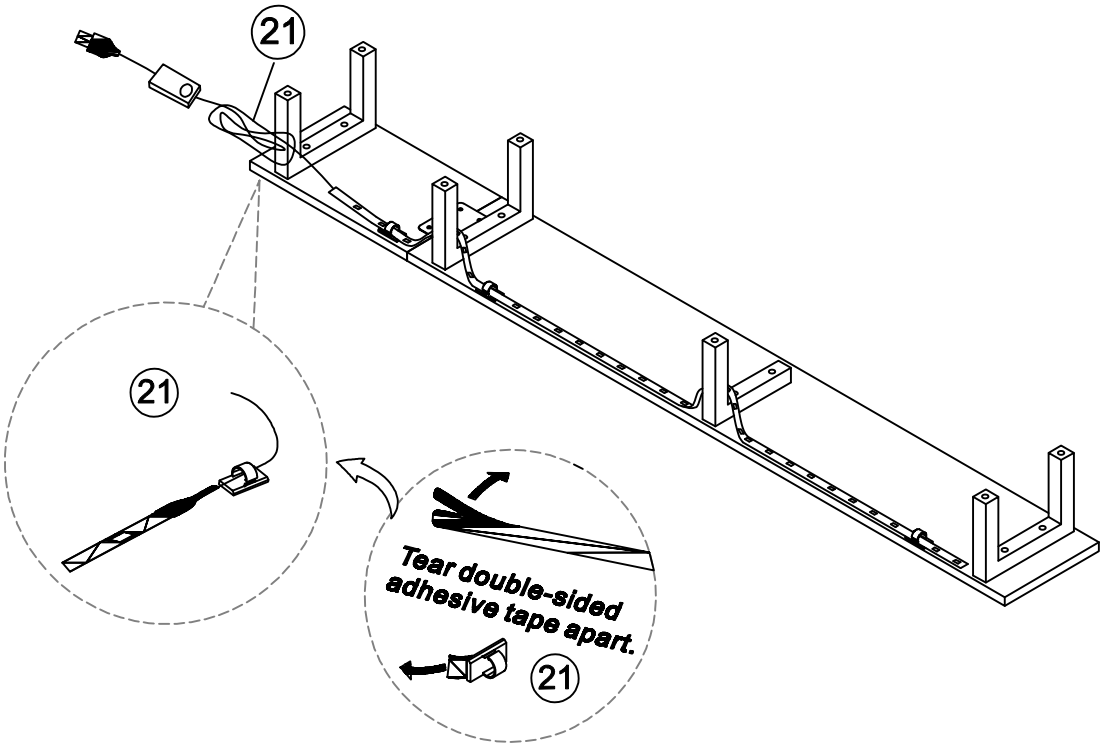

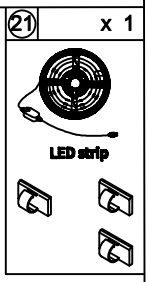

Assembly Instruction

28 Option B

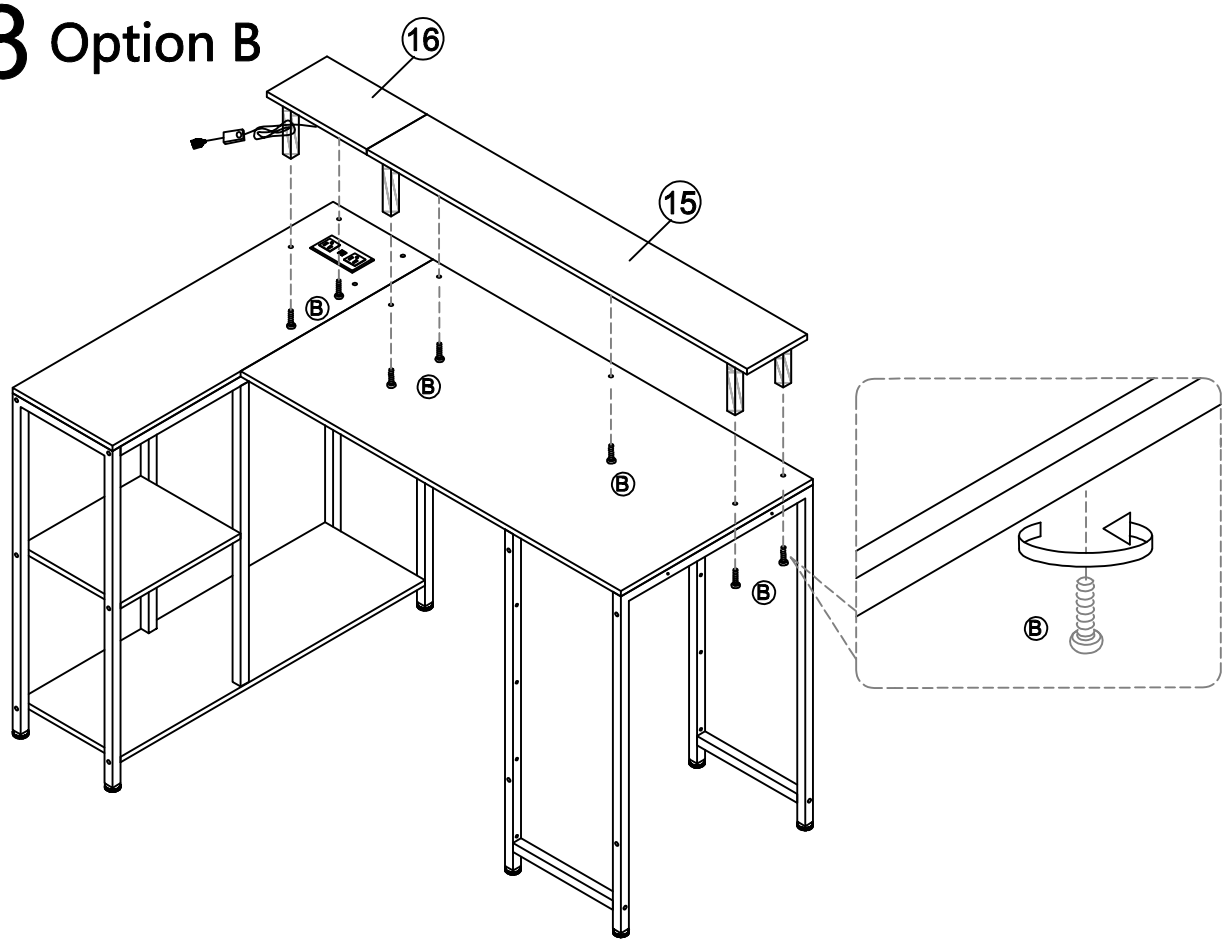

B X 7	
M6*28	4#

29 Option B

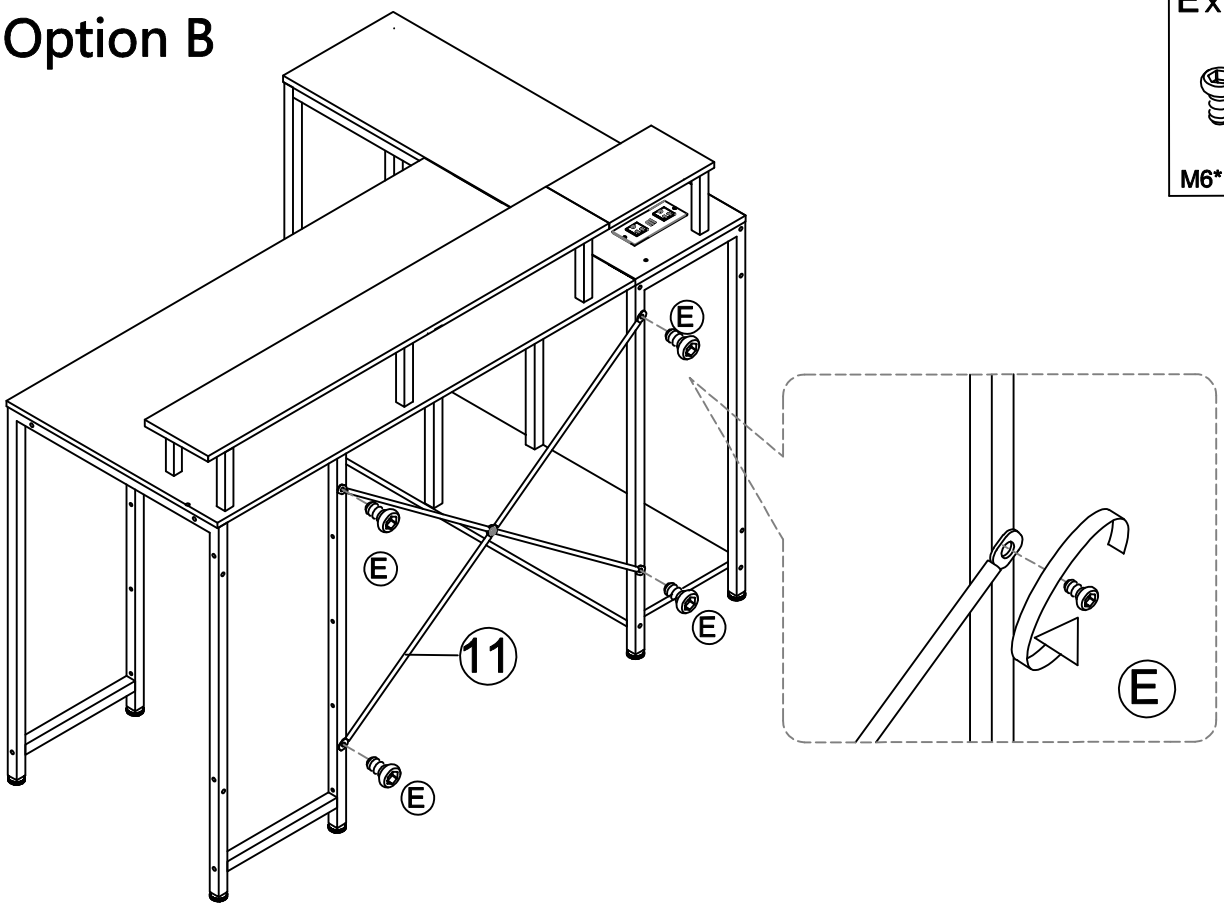

E X 4	
M6*10	4#

Assembly Instruction

30 Option B

F X 6

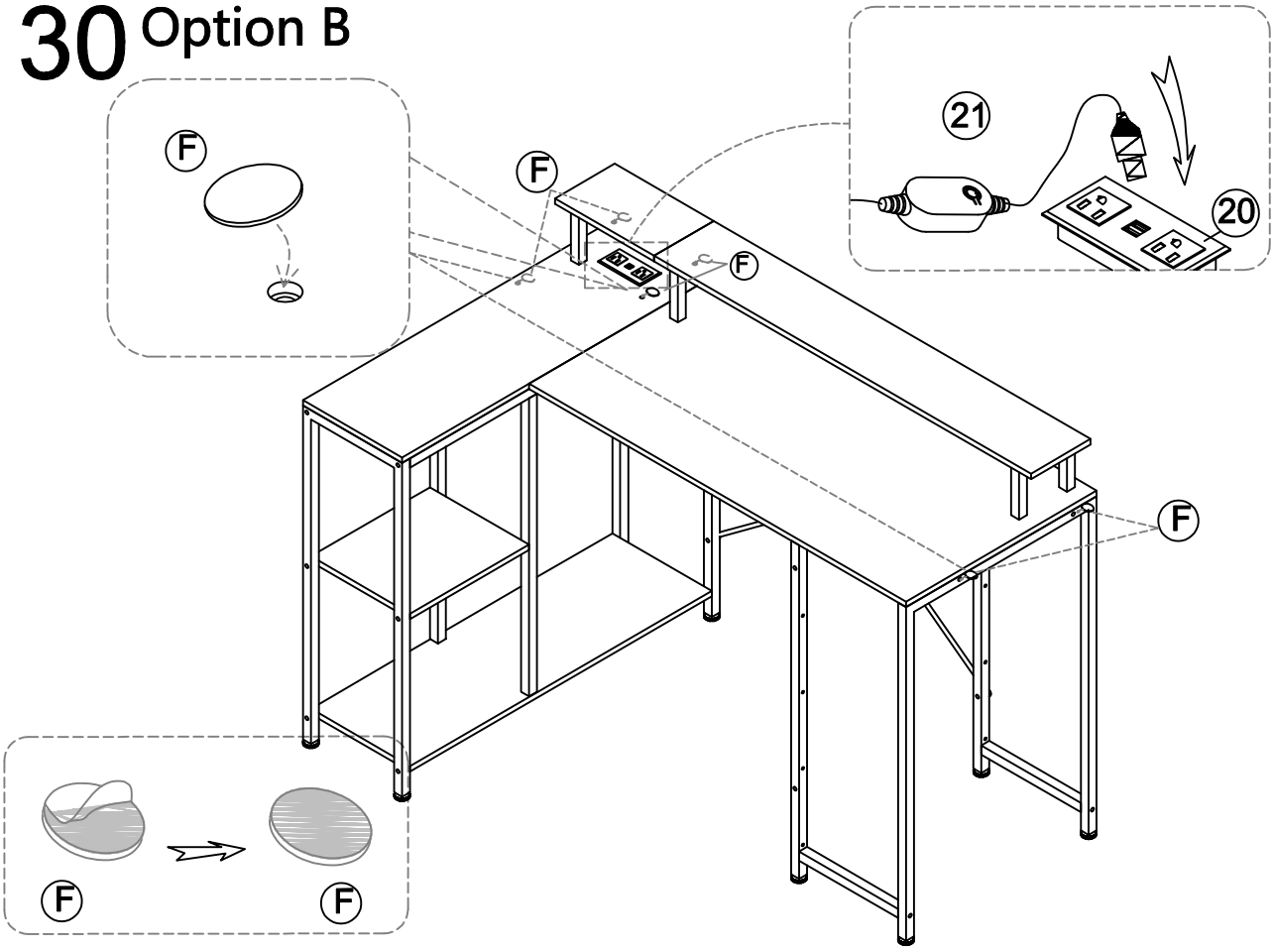

31 Option B

H X 16

M4*10

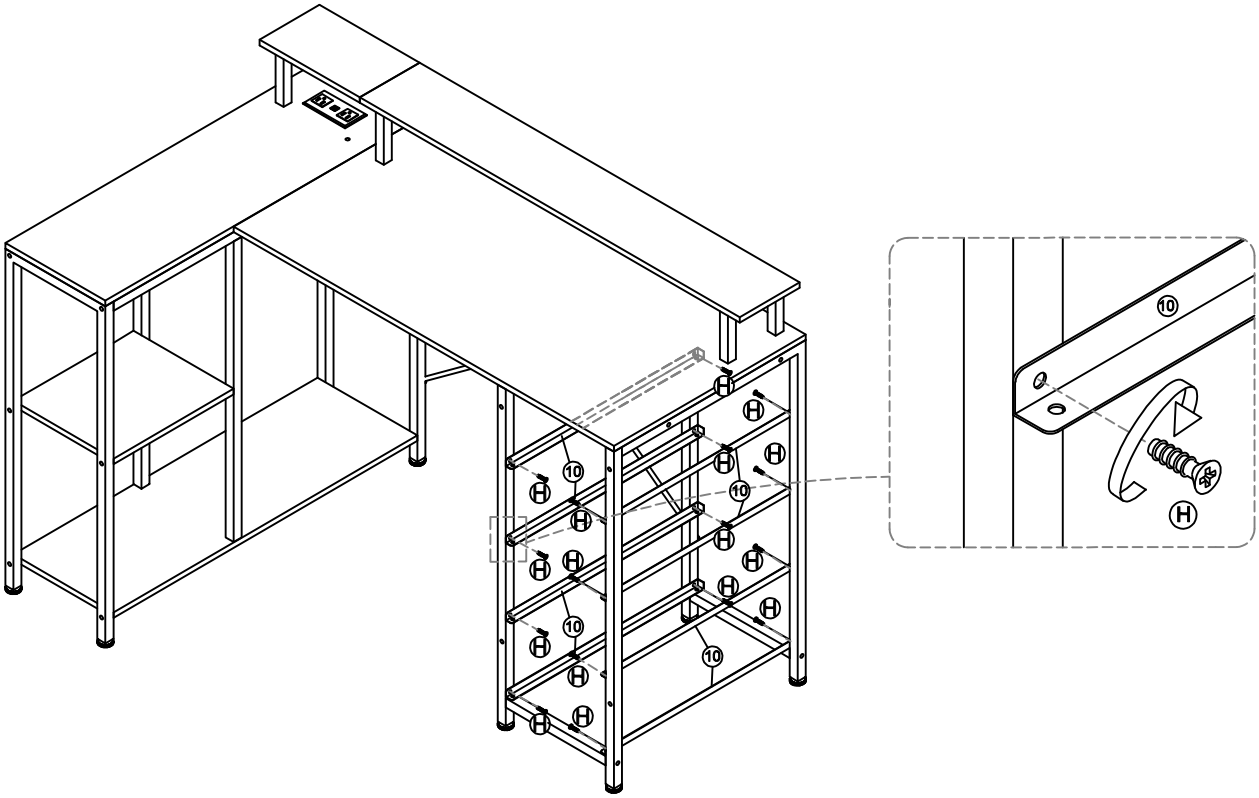

32

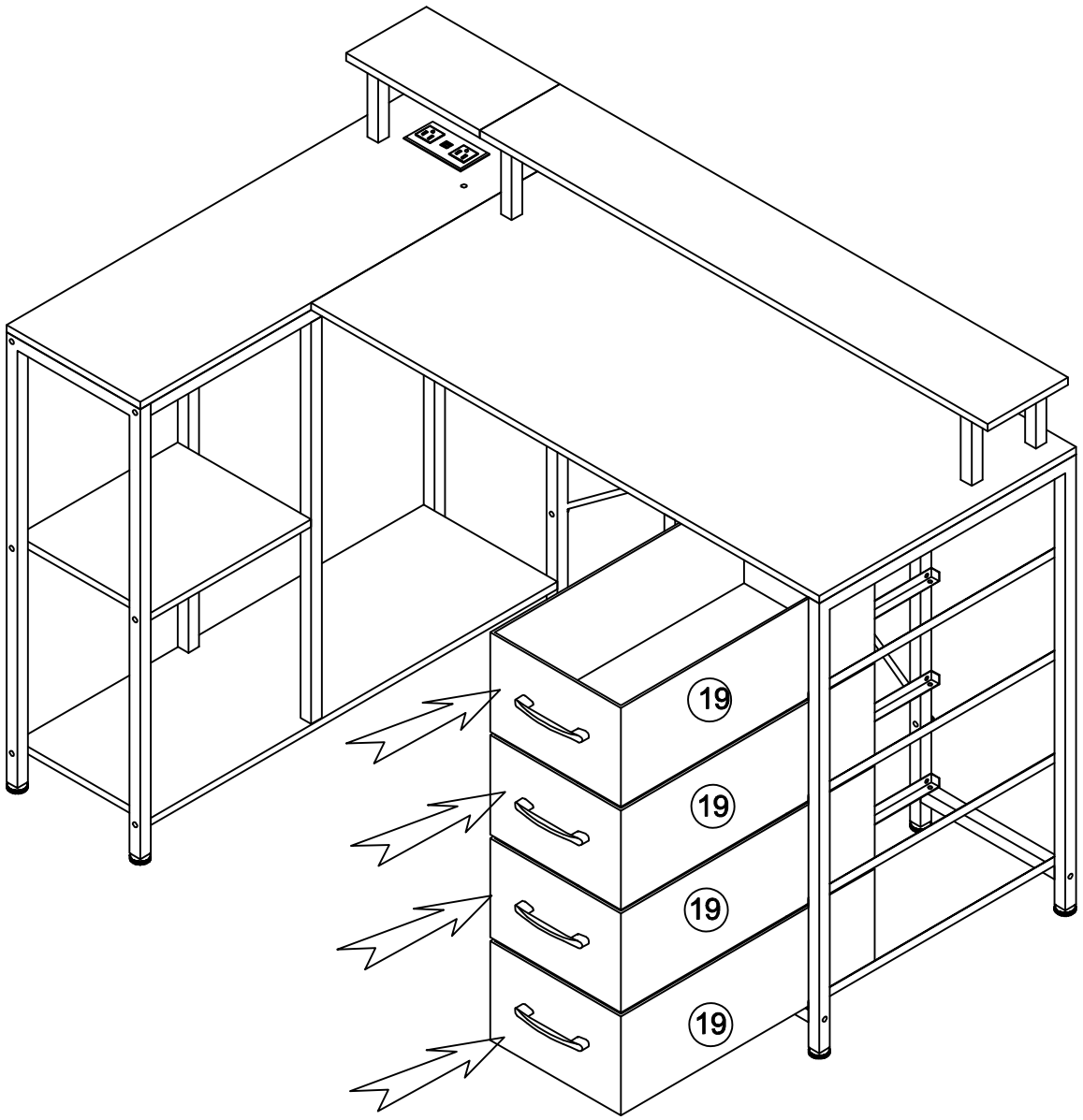



3-years Warranty

We guarantee your product is free from defects in product materia and workmanship for three(3) years starting from the date of purchase during normal use of household conditions.If your appliance fails to operate properly within our warranty period,We will send the corresponding accessories,Replacement is free and all shipping costs are covered

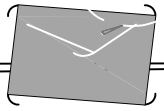

Quick Response within 24 Hours

If you are still unable to resolve the issue, please contact us through the Amazon order page for customer support. Whether the product has been installed or not, our customer support team will respond within 24 hours and assist you promptly.

Problems You May Encounter

Part	Problem	Solution
Cloth drawers	Why use cloth drawers	1. Reducing tree extraction is more environmentally friendly 2. More convenient to use and assemble 3. Reduced the thickness of the side panel, resulting in a larger actual storage space
Whole Produc	Parts are missing, defective or having wrong parts in package	You can contact us and we will get back to you within 24 hours
	Having issue(s) while reading the instruction or completing the assembly	Feel free to contact us and we will get back to you within 24 hours
	Encountering non-human caused damage during usage	If the product is damaged due to non-human causes, please keep the product and send us photos of it. We will ascertain the cause of the product damage within 48 hours and provide you with a satisfactory solution
Table Surface	Board surface is broken, scratched or lacks some screw holes	Feel free to contact us and we will get back to you within 24 hours
	The screw holes on the board and the steel frame don't line up	1. Please tighten the screws on the board by 70%, do not tighten completely 2. Adjust board and steel frame until the screw holes are lined up, then tighten all the screws
	The desk board is uneven or not tight, has gaps after being assembled	1. Loosen the screws in the uneven or gap positions; adjust until the desktops are flat and tight, then tighten the screws 2. If your problem still can't be solved, please feel free to contact us
Steel Frame	The steel frame is bent, broken, painted, rusted or damaged	Feel free to contact us and we will get back to you within 24 hours
	The table is unstable after being assembled	1. Check if the screws are tightened 2. Read through the manual, check if there are any parts installed incorrectly or missing assembly 3. If your problem still can't be solved, please feel free to contact us
	Encountering non-human caused damage during usage	If the product is damaged due to non-human causes, please keep the product and send us photos of it. We will ascertain the cause of the product damage within 48 hours and provide you with a satisfactory solution

Thank you
for choosing our product

SEDETA

Made In China