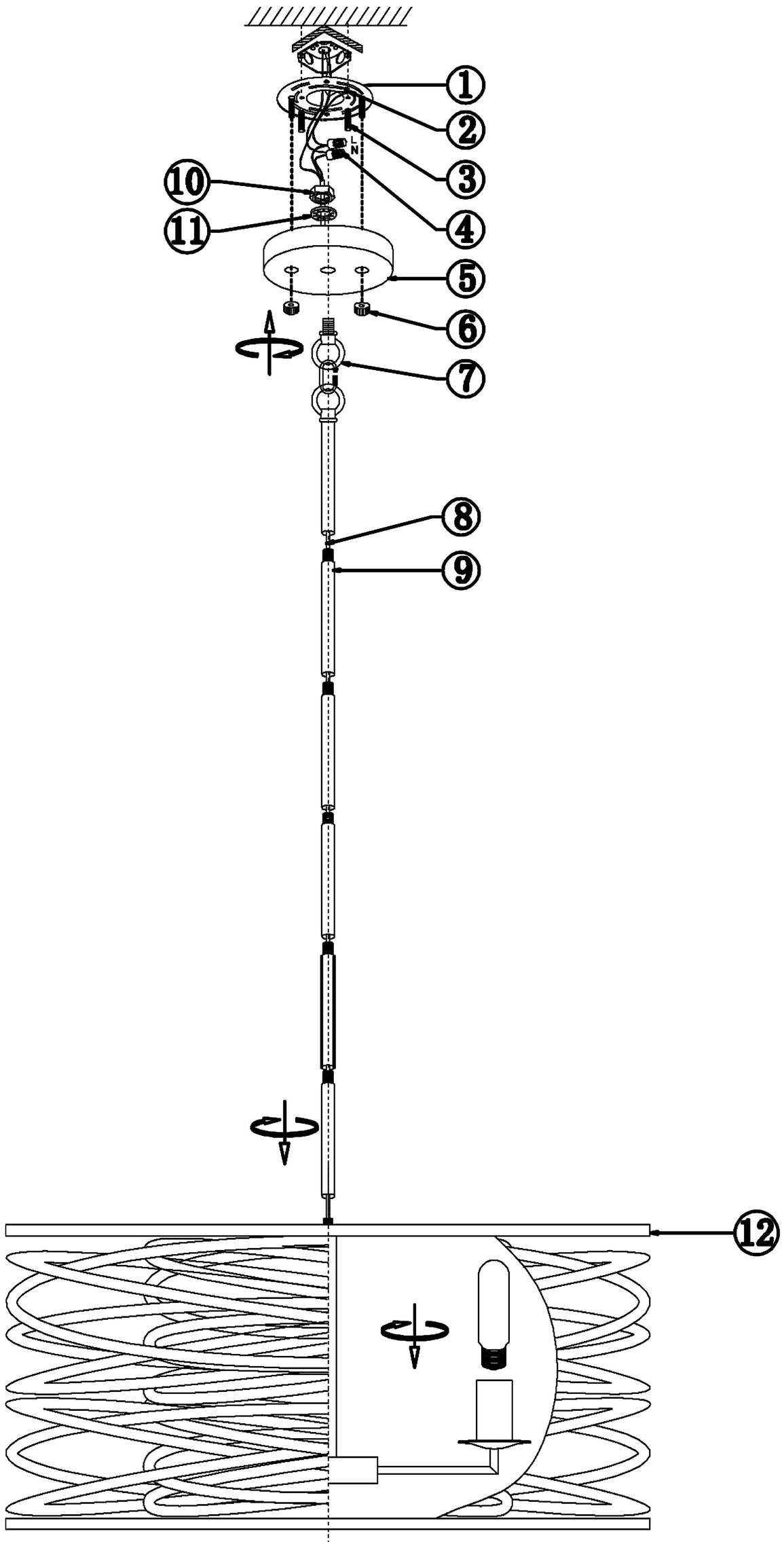

Installation Steps：

Step 1: Pass the main wire(8) through the rod (9) and then fix the rod (9) to the lamp body.
Step 2: Screw the hanging chain + rod combination (7) onto the rod (9).
Step 3: Use the nut (10) to fix the canopy (5) on the hanging chain + rod combination (7).
Step 4: Use 30MM screws (3) to fix the mounting plate ((1) on the ceiling.
Step 5: Use screws (2) to lock the ground wire on the mounting plate (1).
Step 6: Use the wiring cap (4) will be the main line and the power cord of the positive "L", and negative "N" poles will be connected separately.
Step 7: Use the nut (6) to fix the canopy (5) on the mounting board (1).
Step 8: Installation of light bulbs (without bulbs).

Accessories：

1：Mounting Plate*1	
2：Screws*1	
3：30mm Screws*3	
4：Wiring Cap*3	
5：canopy*1	
6：Nut*2	
7：Rod+Chain*2	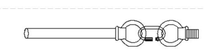
8：Wire*1	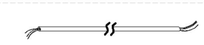
9：Rod+Chain*5	
10：Nut*1	
11：Spring Washer*1	
12：Light Frame*1	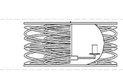
13：Wrench*1	
14：Screws*3	
15：Anchors*3	

Notice： This light fixture should be installed in accordance with all applicable, local installation codes, and by a person familiar with the construction and operation of it, as well as the hazards involved. Inspect items and contents carefully. If any damage or defect is found, do not install it.