INSTALLATION
Product Manual

Version: 750028US-01-26A-AA

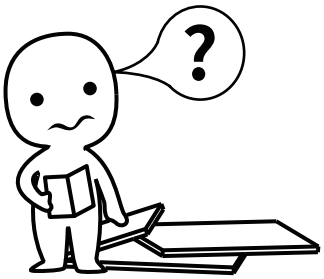

IMPORTANT INFORMATION!

please read the entire manual before starting to assemble and/or using this product.follow the manual thoroughly and keep it for further reference.

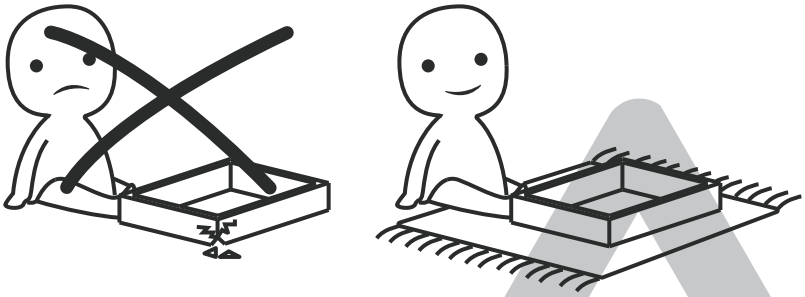

AVOID SCRATCHES!

In order to avoid scratching this furnuture should be assembled on a soft layer-could be a rug.

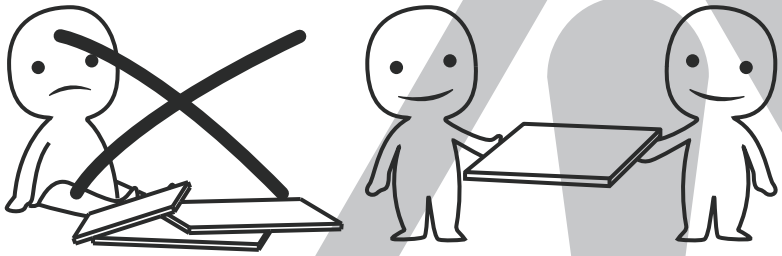

IMPROVE EFFICIENCY !

Try to find a partner to install with you, which can speed up the installation efficiency and shorten the time.

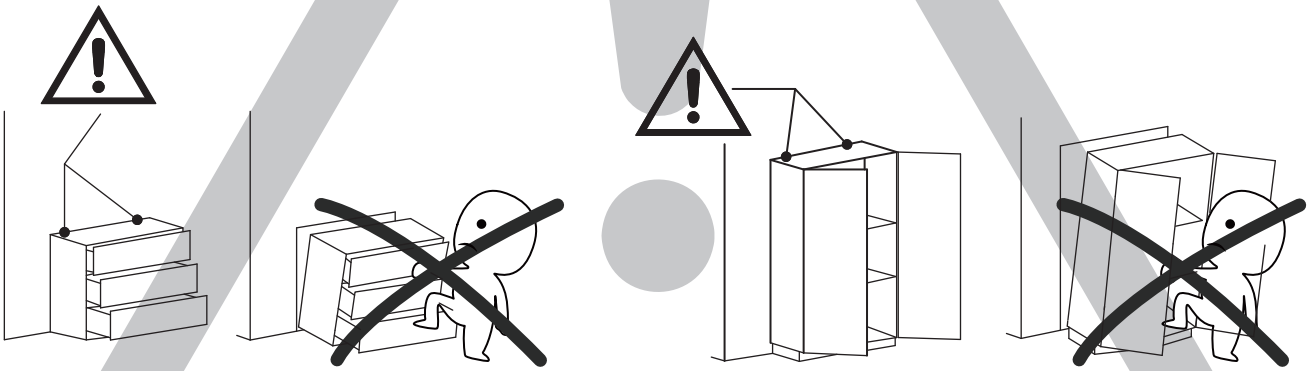

ANTI-TOPPLE WARNING !

Overturned furniture can cause serious or fatal crush injuries. To prevent tipping over, be sure to use the wall attachment, if not included with this product. Please purchase the wall attachment that fit your wall. If unsure, seek professional advice. Please read and follow each step of the instructions carefully.

IMPORTANT !

It is important that any product which is assembled using any kind of screw is re-tightened 2 weeks after assembly,and once every 3 months - in order to assure stability through-out the lifespan of the product.

For regular maintenance and cleaning of the product, for the frame, please use a rag dipped in neutral detergent to fully wipe it, and then dry it with a clean rag.For glass materials, wipe with a rag dampened with water glass cleaner, and then dry with a dry rag.

Do not use an electric screwdriver, and do not use too much force when installing, because the board is easy to break.

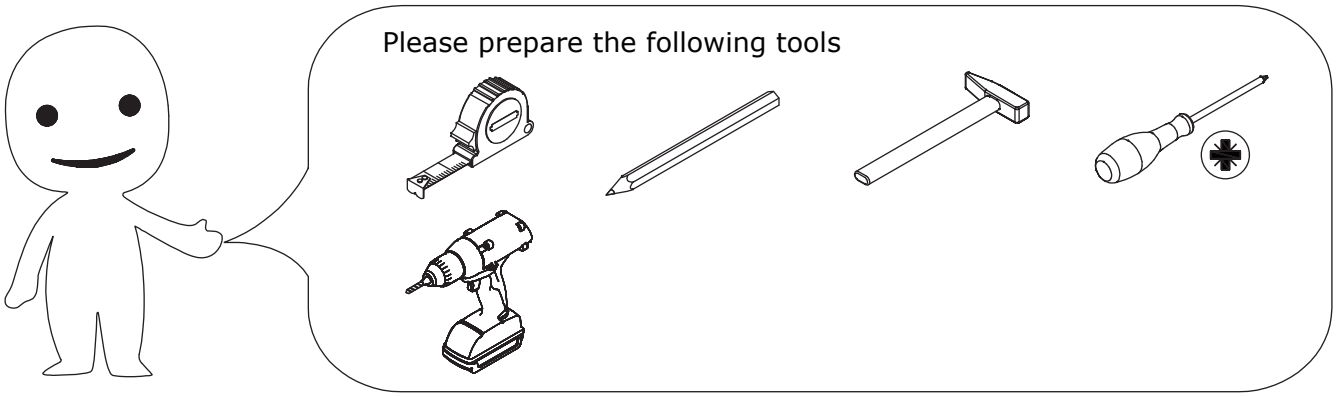

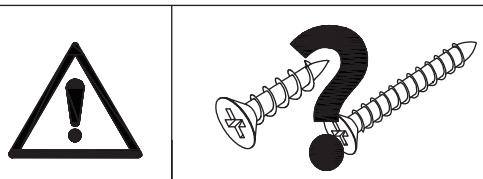

When installing, please carefully confirm whether each screw corresponds to the manual, accessories with similar shapes can be distinguished by size

A x 10	B x 10	C x 20	D x 14	E x 76
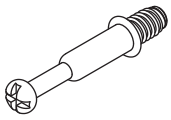 CRA0635B	 CRB1595A	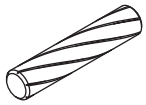 CRF0830A	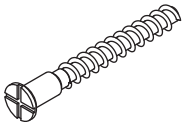 CRC0540A	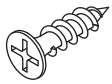 CRD3514A

F x 4	G x 78	H x 14	J x 14	K x 10
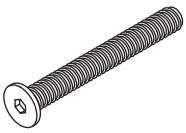 CRG0660A	 CRG0612A	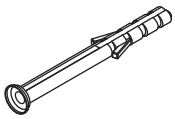	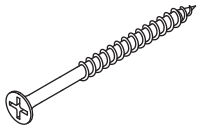 CRD0580A	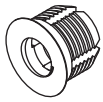

L x 4	M x 32	N x 4	P x 8	Q x 16
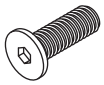 CRG0616A	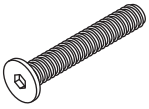 CRG0645A	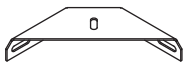	 CRG0635A	

R x 2	S x 4	T x 4	U x 2	V x 4
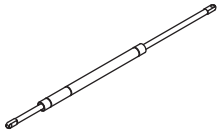			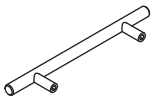	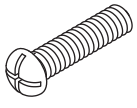 CRE0420A

W x 2	X x 2	Y x 2	Z x 4	AA x 4
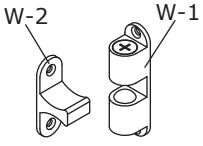	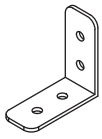	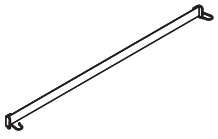		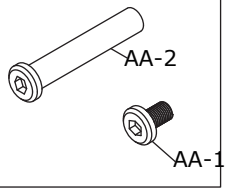

AB x 24	AC x 2	AD x 1	AE x 1	AF x 1
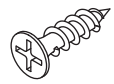 CRD0416A	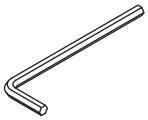 M4	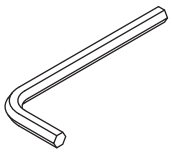 M12	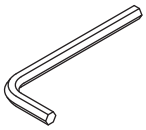 M5	 M8

AG x 9	AH x 6	AJ x 16	AK x 4	AL x 8
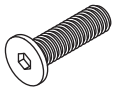 CRG0625A	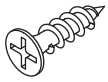 CRD3516A	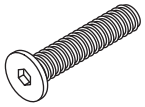 CRG0835A	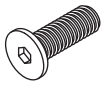 CRG0616A	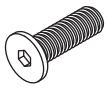 CRG0620A

AM x 12	AN x 14	AP x 14	AQ x 8
 CRG0630A	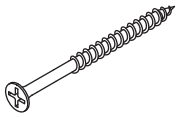 CRD0468A	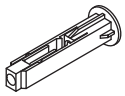	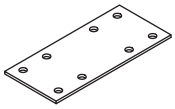

Important information to read before starting the assembly. Keep this information for future reference.



IMPORTANT WARNINGS

Risk of serious injuries if the wall bed tips over.
To prevent wall bed from tipping over, mount it permanently to the wall.
Only a qualified person* must carry out the installation and any possible adjustment of the wall bed (including disassembly). If the wall bed is not firmly mounted (anchored) to the wall, it might tip over and cause serious injuries to the installer, users of the bed as well as the people near the bed.
The choice of wall anchoring depends on the type of wall. Use wall anchors suitable for the wall material.

*Qualified person: it is necessary to have a good understanding of the wall structure where the bed is anchored, including the positioning of the joists and structural components in the case of a wood or metal structure. If you do not have the necessary skills, make sure that the installation is done by a person who has the qualifications and required knowledge. When you choose the installer, make sure to comply with all applicable regulations in the province, state or country where the furniture is installed.

IMPORTANT: BEFORE STARTING ASSEMBLY

Be sure to confirm the following information:
1.The installer has the qualifications * and required knowledge.
2.Only wall anchor screws for wood-frame walls are provided with this bed. See anchor requirements and installation notes provided in the instruction manual, according to the type of wall, and use the appropriate anchors such as described in this manual.
3.Your bed can hold a maximum distributed weight of 800 lb (362 kg), including the weight of the mattress.
4.Maximum thickness of mattress: 10 in (25 cm), and must stand in vertical position without sagging.
5.The bed will not stay open without the weight of the mattress which must be between: 38 lbs (15 kg) and 90 lbs (41 kg).
6.Minimum ceiling height requirements for installation: 90 in (2.286 m).
7.It is recommended to assess the structural integrity of the floor and wall and to make sure that the wall anchoring devices can withstand the forces generated. More specifically, before installing the wall bed, it is necessary to verify that the floor and the wall on which you want to install the bed are flat and have no structural damage that could affect the installation of the wall bed or its anchoring to the wall. Do not install the bed on weakened or rotten structures.
8.It is necessary to ensure that wall anchors of the bed can withstand forces generated. The value of the holding power (Fh) of each anchor should be 630 Newtons (142 lbf).

If the wall bed is not installed properly, the latter might close unexpectedly or could open involuntarily.
In addition, if the wall bed is installed incorrectly, one of its structural components may break and fall off.

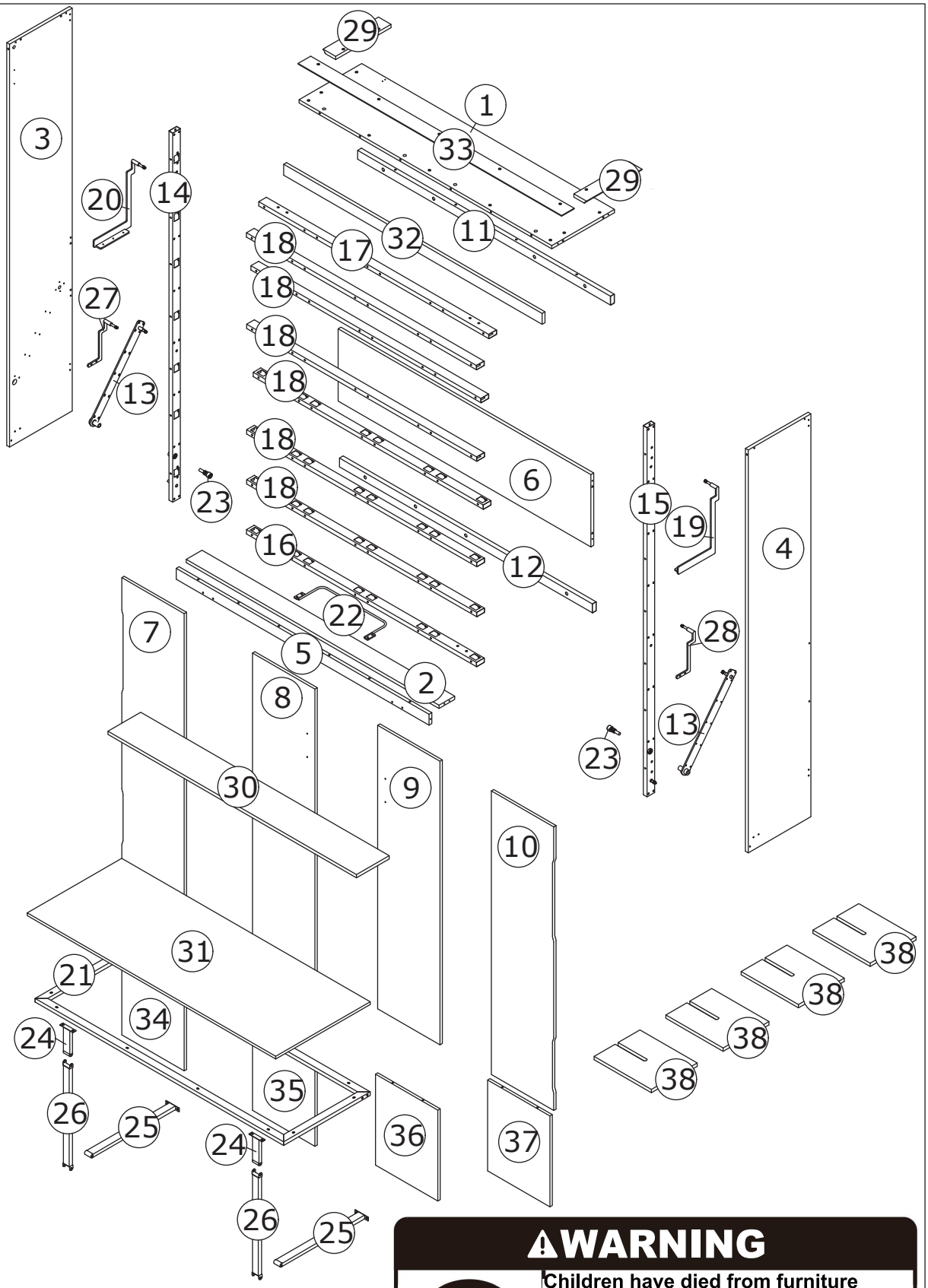

⚠WARNING





Children have died from furniture tipover.To reduce the risk of furniture tipover:

- ALWAYS install Anti-tip device provided.
- NEVER put a TV on this product.
- NEVER allow children to stand,climb or hang on drawers,doors,or shelves.
- NEVER open more than one drawer at a time.
- Place heaviest items in the lowest drawers.

This is a permanent label.
Do not remove!

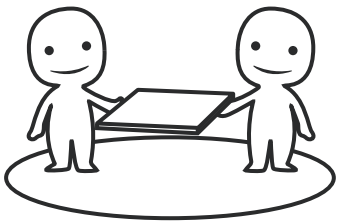

ASSEMBLED BY 2 ADULTS

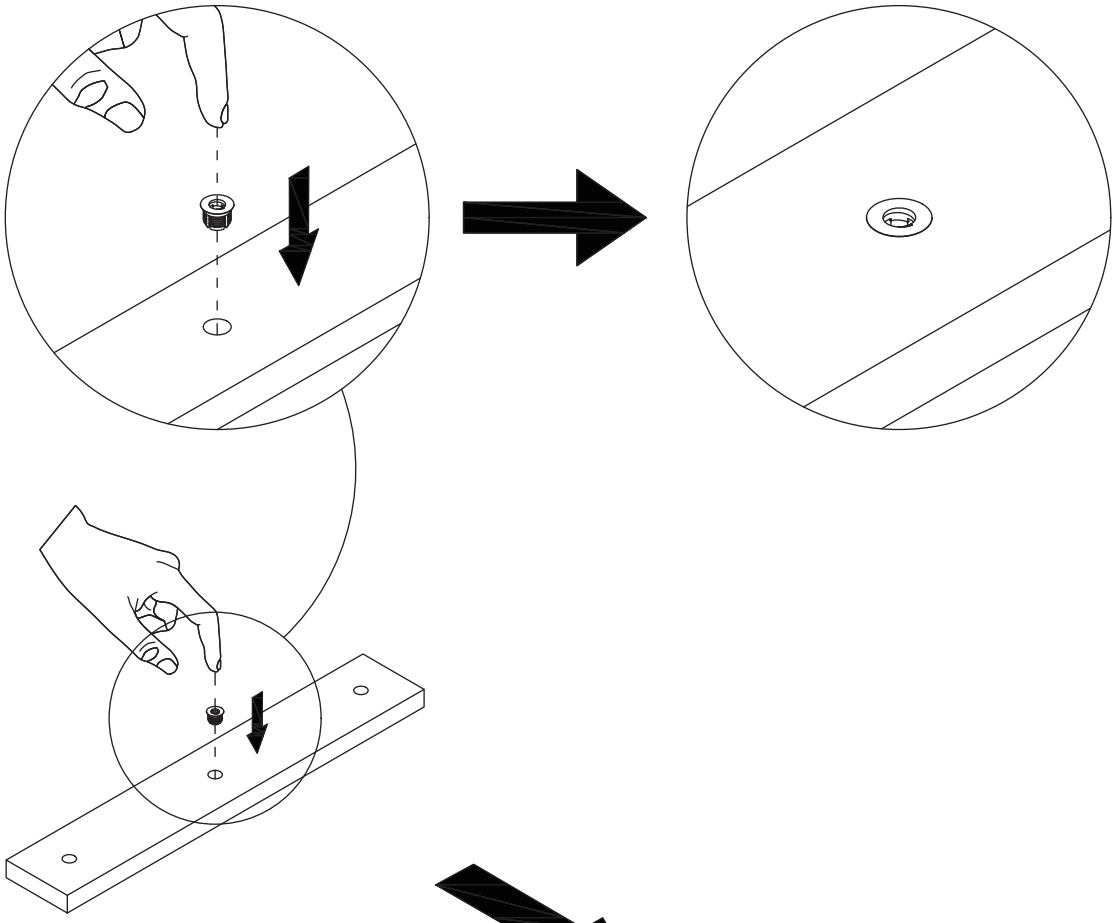

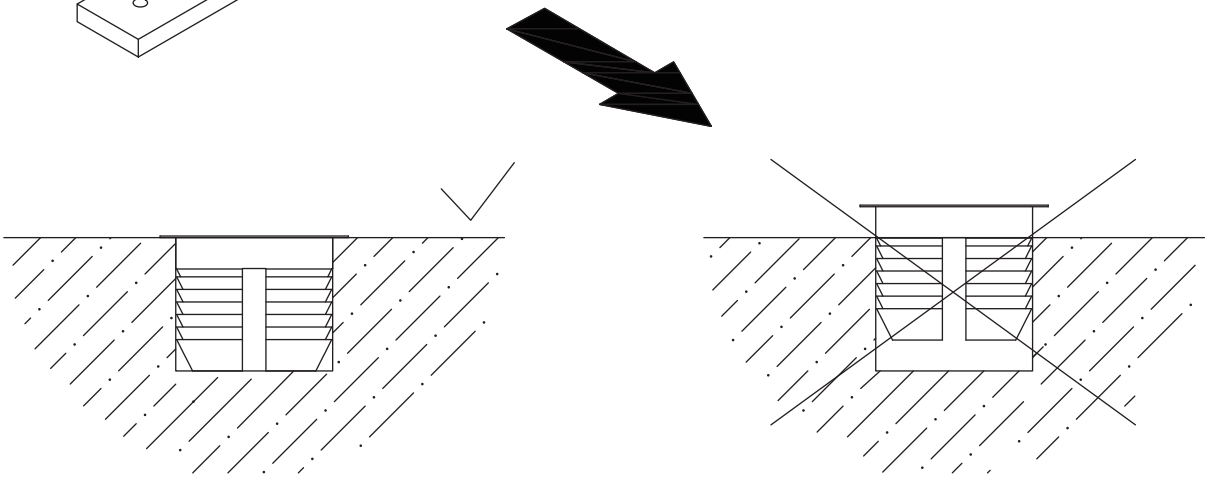

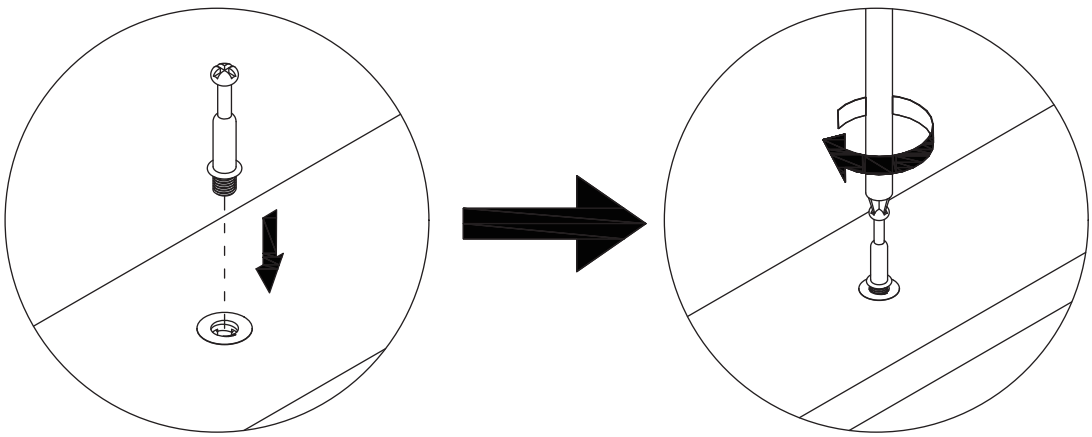

1

AB x 24

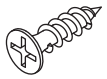

CRD0416A

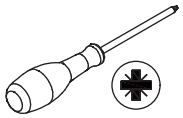



E



CRD3514A

AB



CRD0416A

AH



CRD3516A

Secure part (13) to Panels 3 and 4 with screws (AB).

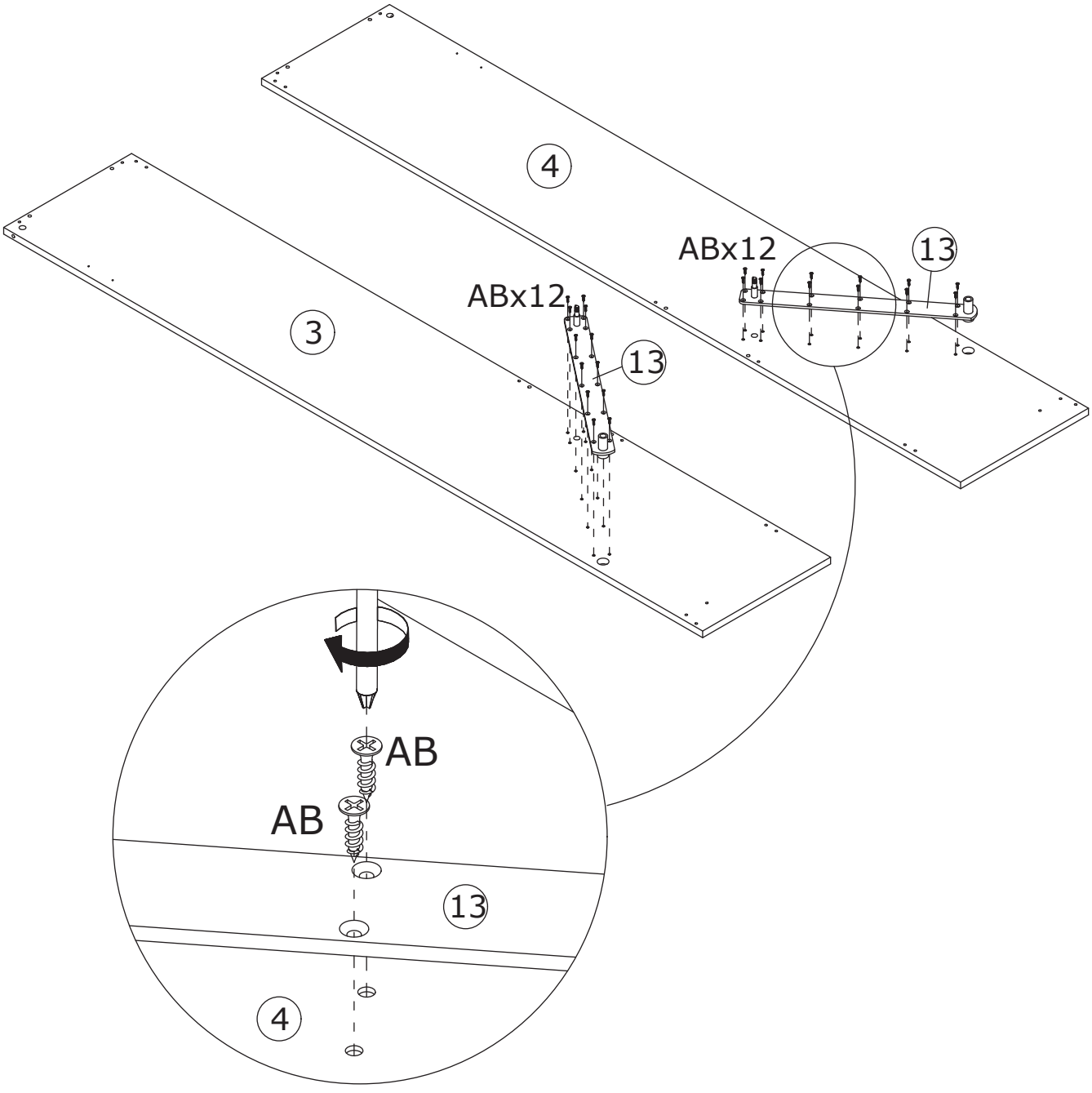

2

F x 4	AC x 1	
 CRG0660A	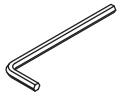 M4	

Secure part (11) to Panel 1 with screws (F).

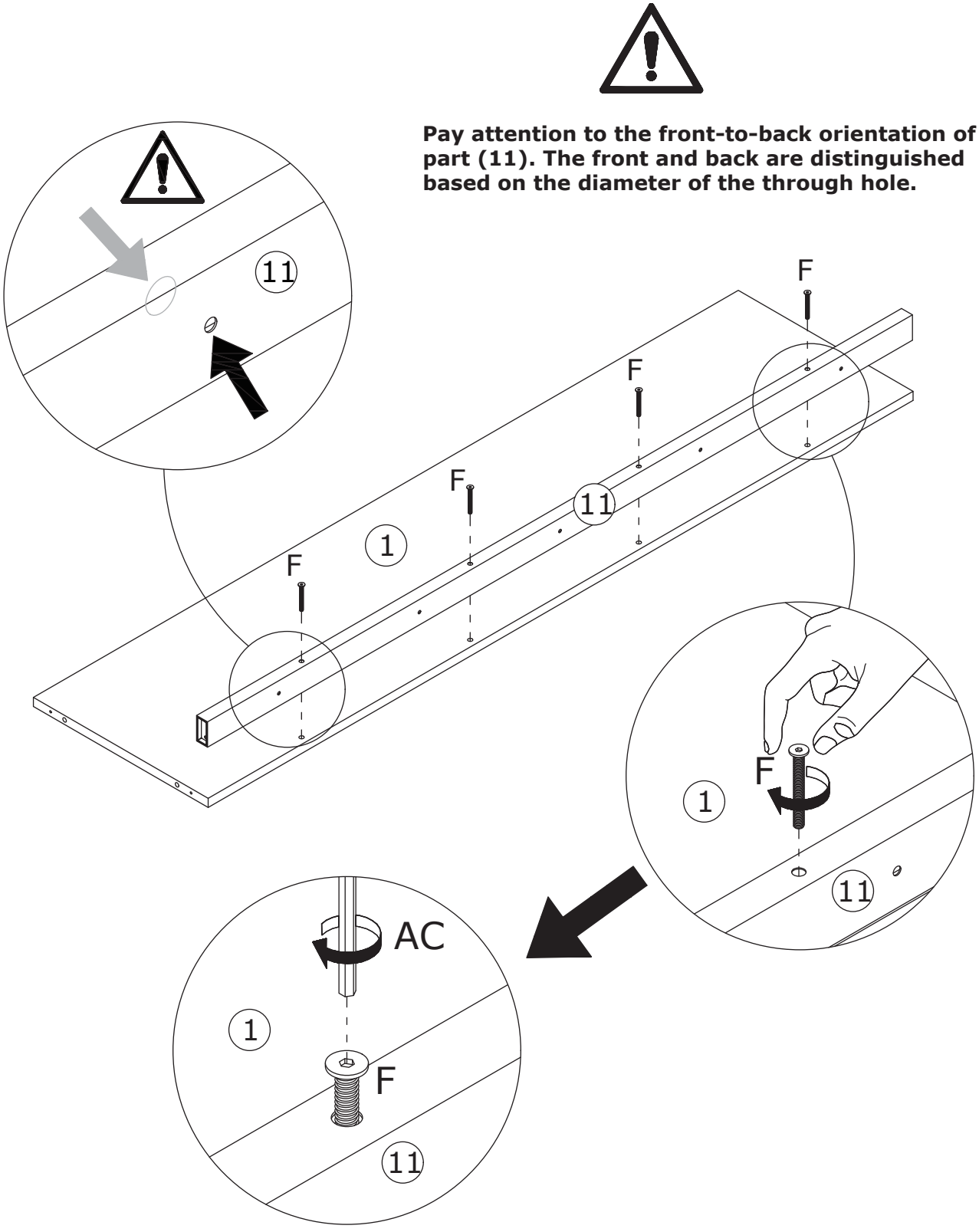

Pay attention to the front-to-back orientation of part (11). The front and back are distinguished based on the diameter of the through hole.

3

A x 10	K x 10	
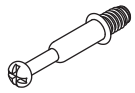 CRA0635B		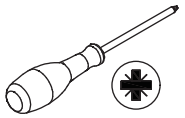

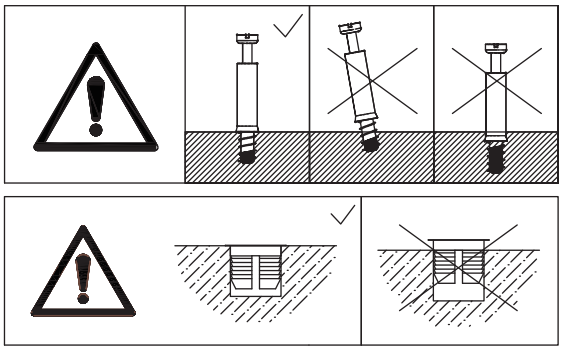

Insert threaded inserts (K) into the pre-drilled holes of Panels 2 and 32, then fasten cam screw (A) into the insert nuts.

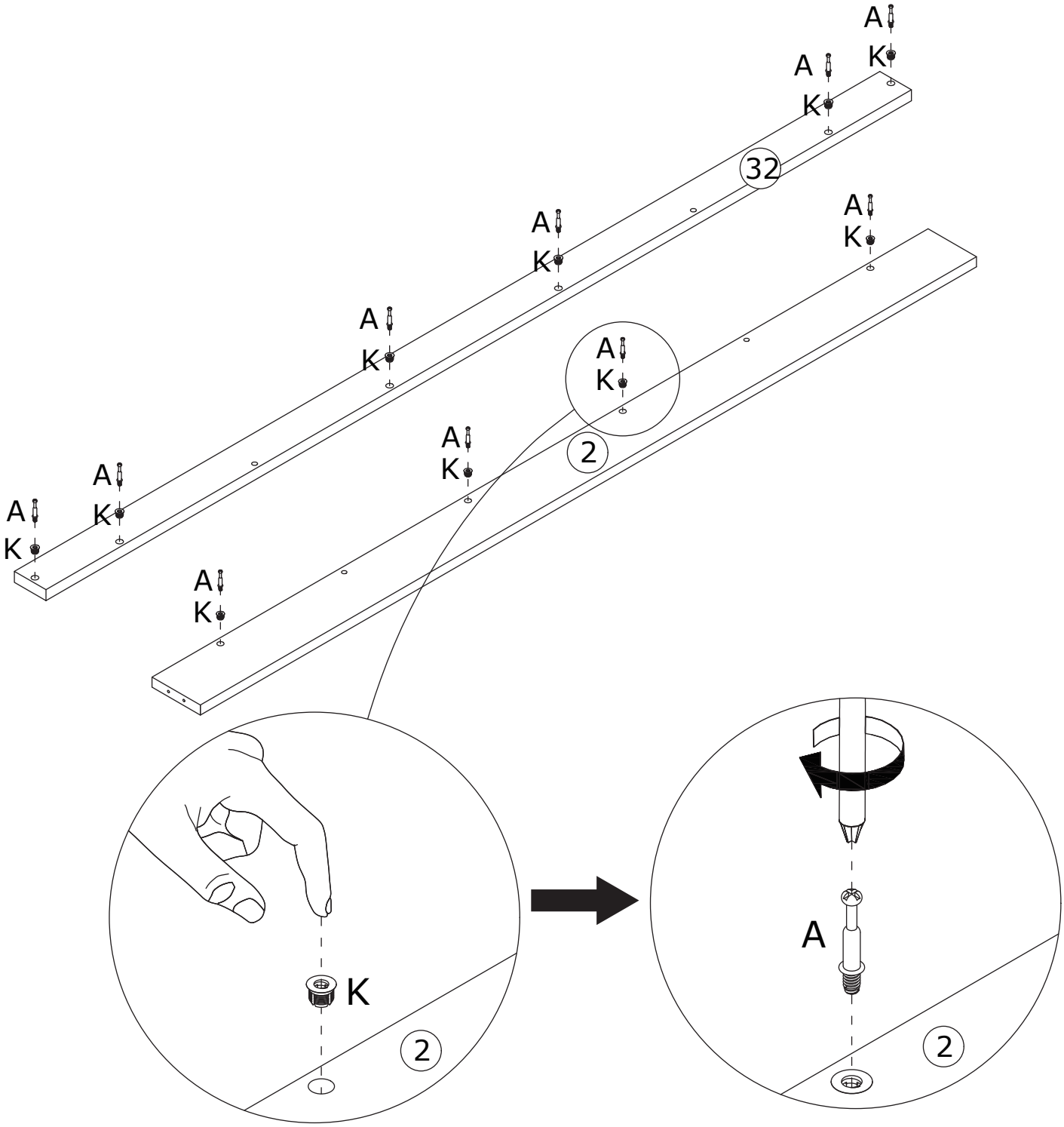

4

B x 4	C x 2	
 CRB1595A	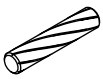 CRF0830A	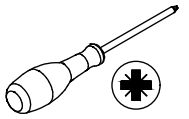

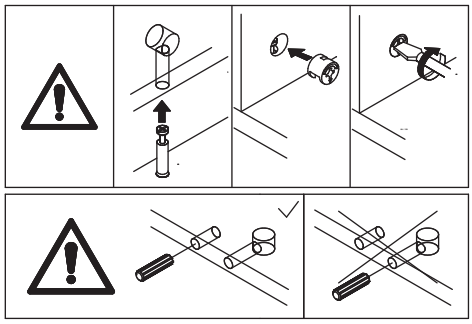

Connect Panel 5 to Panel 2 with dowel pins (C), fit cam lock (B) into position, then turn it clockwise to tighten.

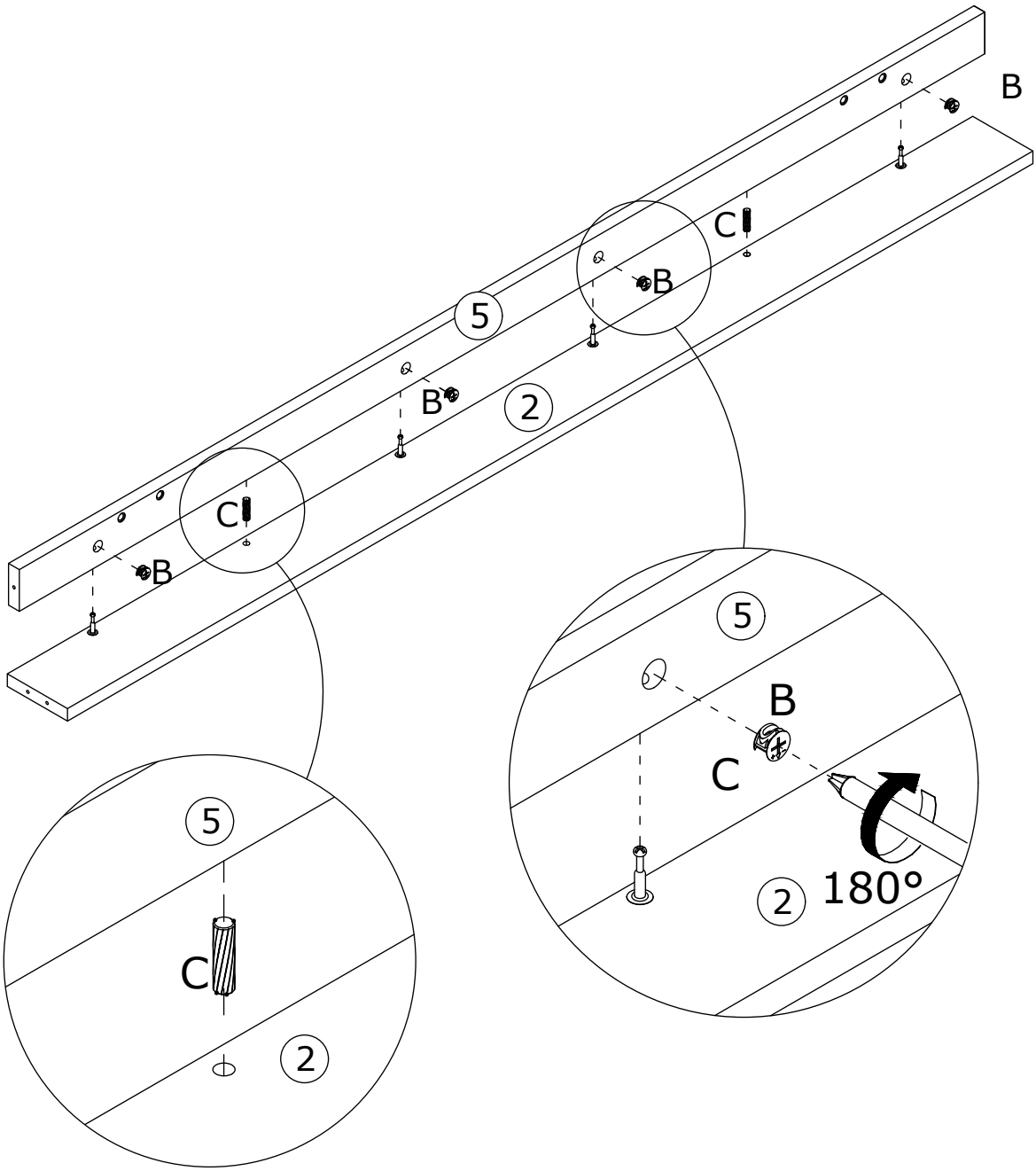

5

C x 4	D x 4	P x 4	AC x 1	
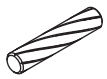	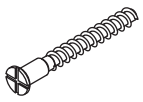		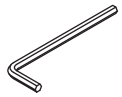	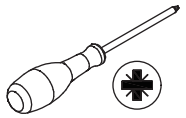
CRF0830A	CRC0540A	CRG0635A	M4	

Connect Panels 1 and 6 to Panel 3 with dowel pins (C), then secure with screws (D).

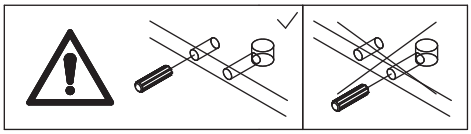

Secure parts (11) and (12) to Panel 3 with screws (P).

Pay attention to the front-to-back orientation of part (12).
The front and back are distinguished based on the diameter of the through hole.

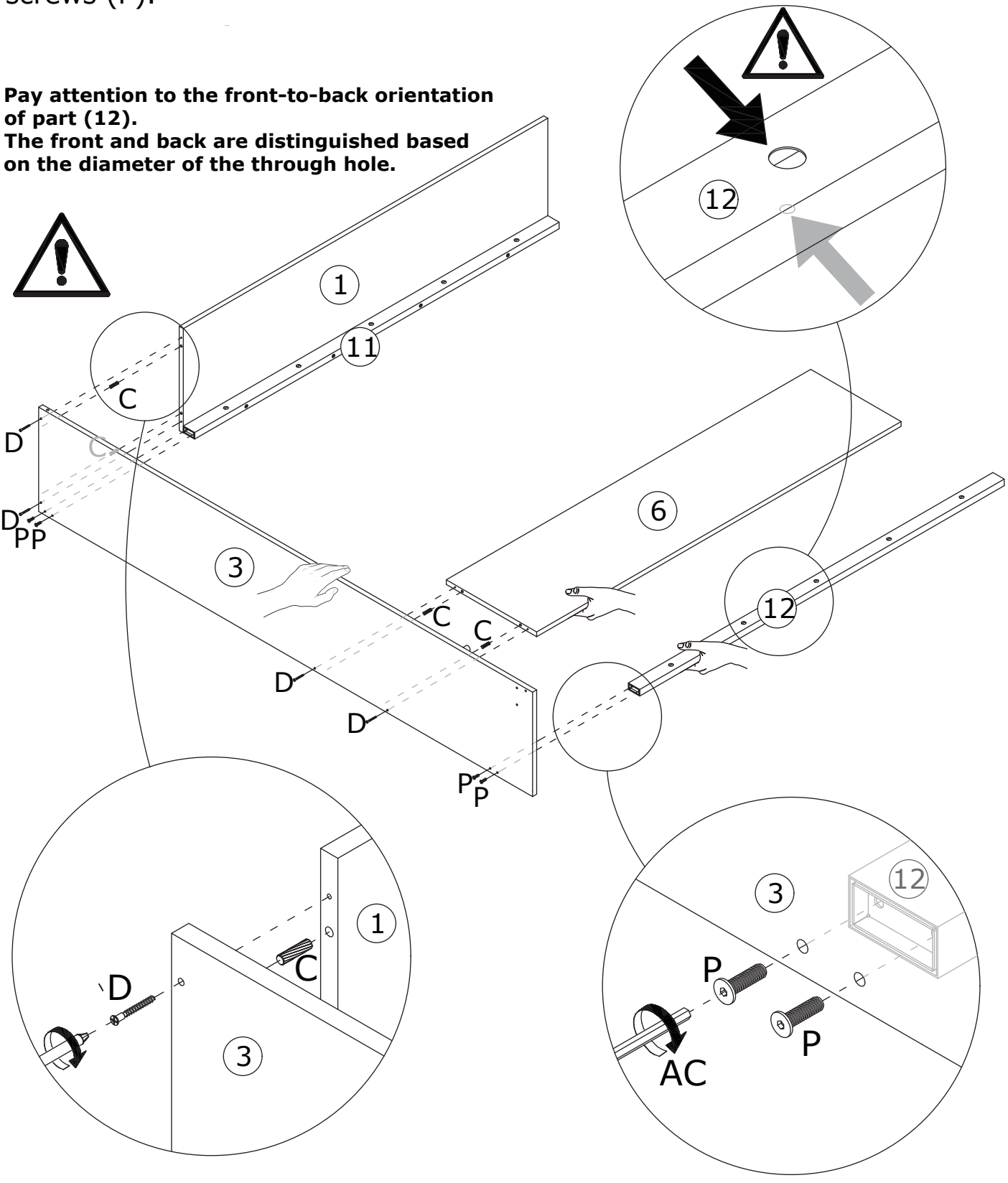

6

C x 4	D x 10	P x 4	AC x 1	
CRF0830A	CRC0540A	CRG0635A	M4	

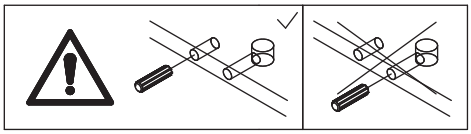

Connect Panel 4 to Panels 1 and 6 using dowel pins (C), then secure with screws (D).

Secure parts (11) and (12) to Panel 4 with screws (P).

Secure Panels 2 and 5 to Panels 3 and 4 with screws (D).

Note: Panels 2 and 5 must be held by hand during installation to prevent panel damage.

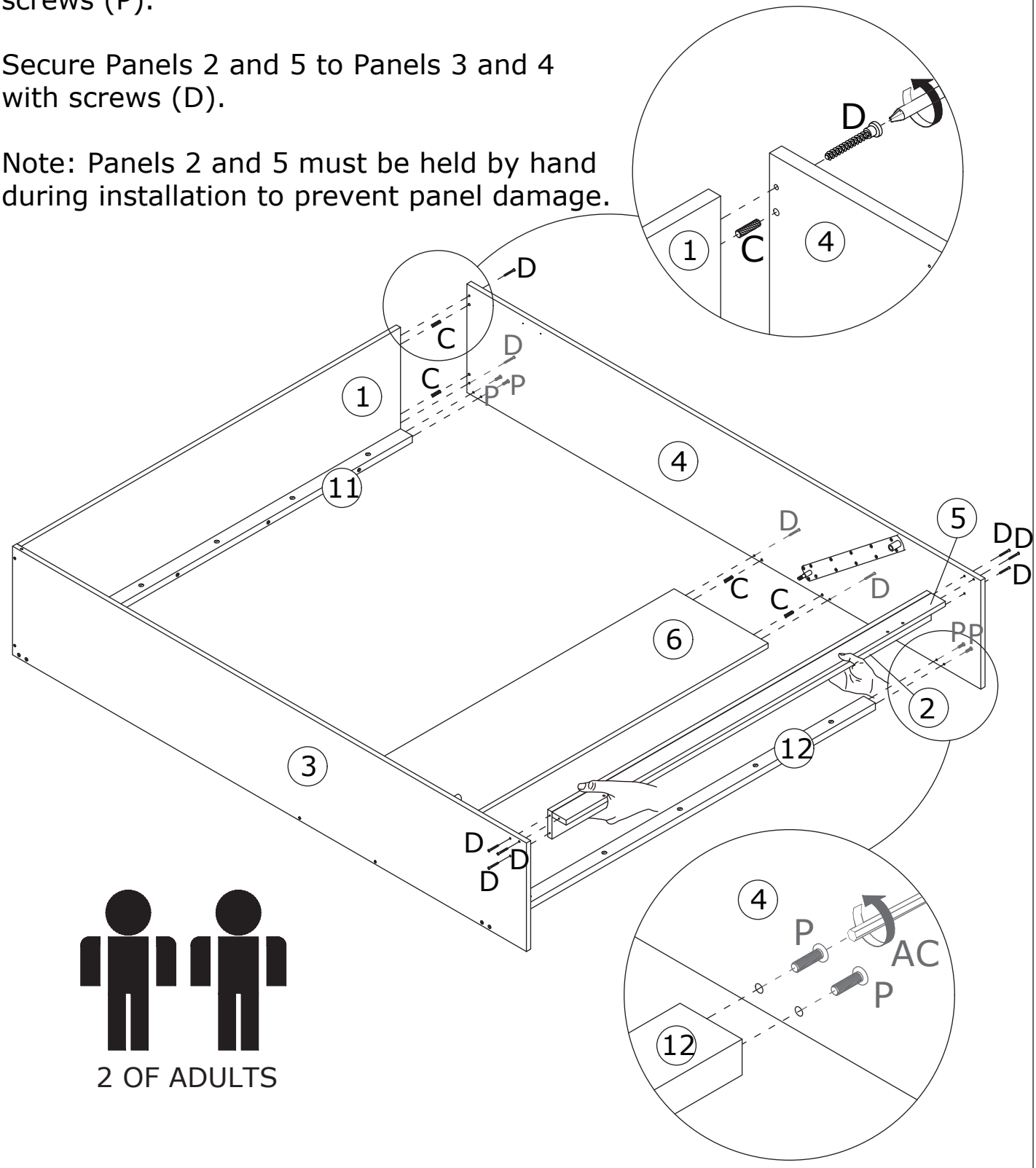

2 OF ADULTS

7

B x 6	C x 2	
 CRB1595A	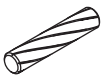 CRF0830A	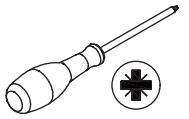

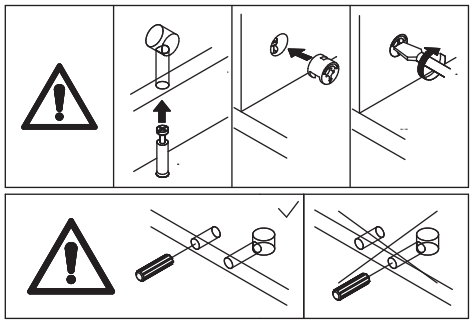

Connect Panel 32 to Panel 1 with dowel pins (C), fit cam lock (B) into position, then turn it clockwise to tighten.

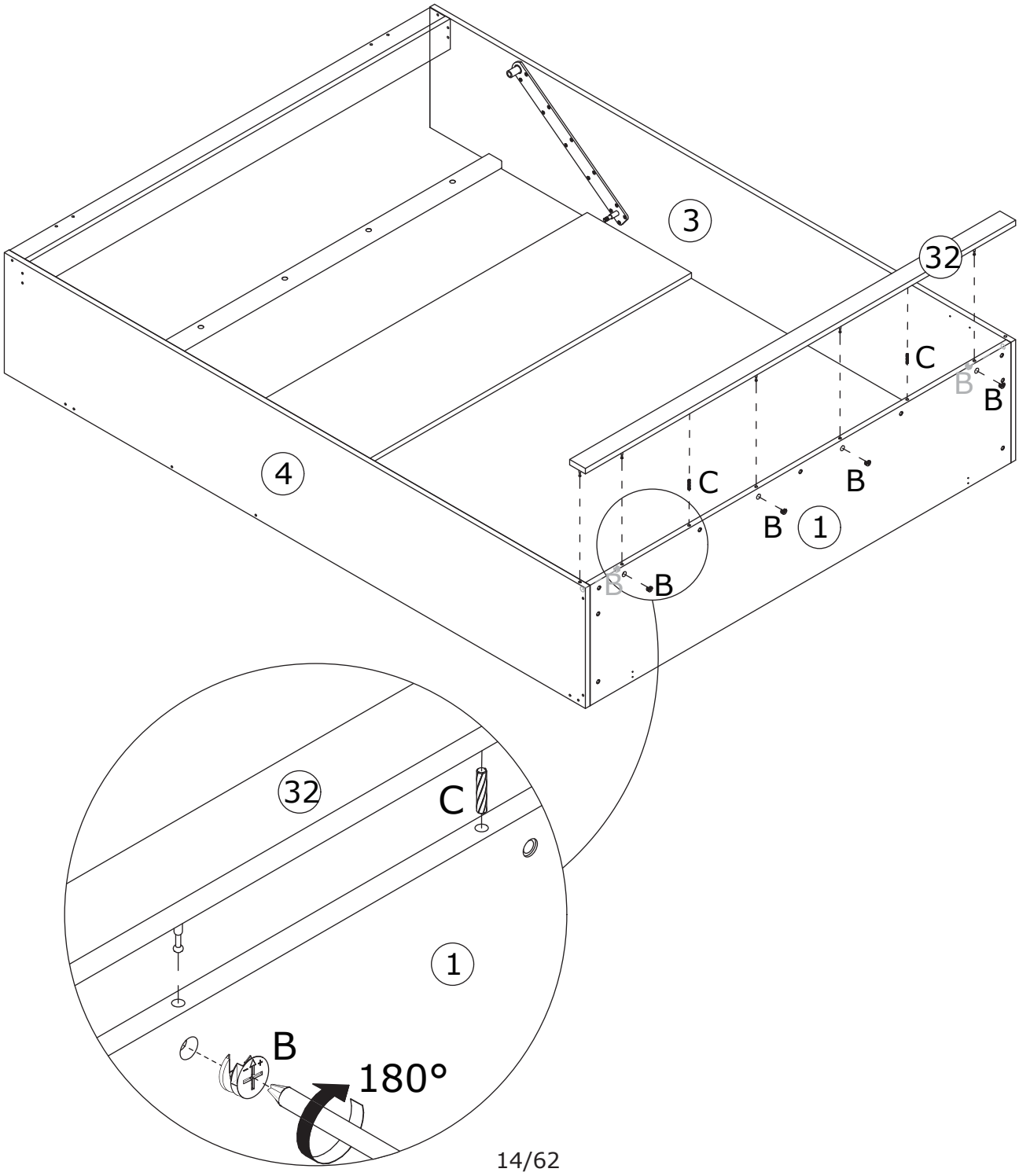

8

AG x 4	AC x 1	
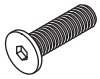 CRG0625A	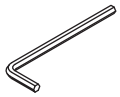 M4	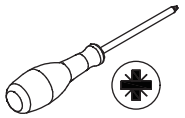

Secure Panel 29 to Panel 1 with screws (AG).

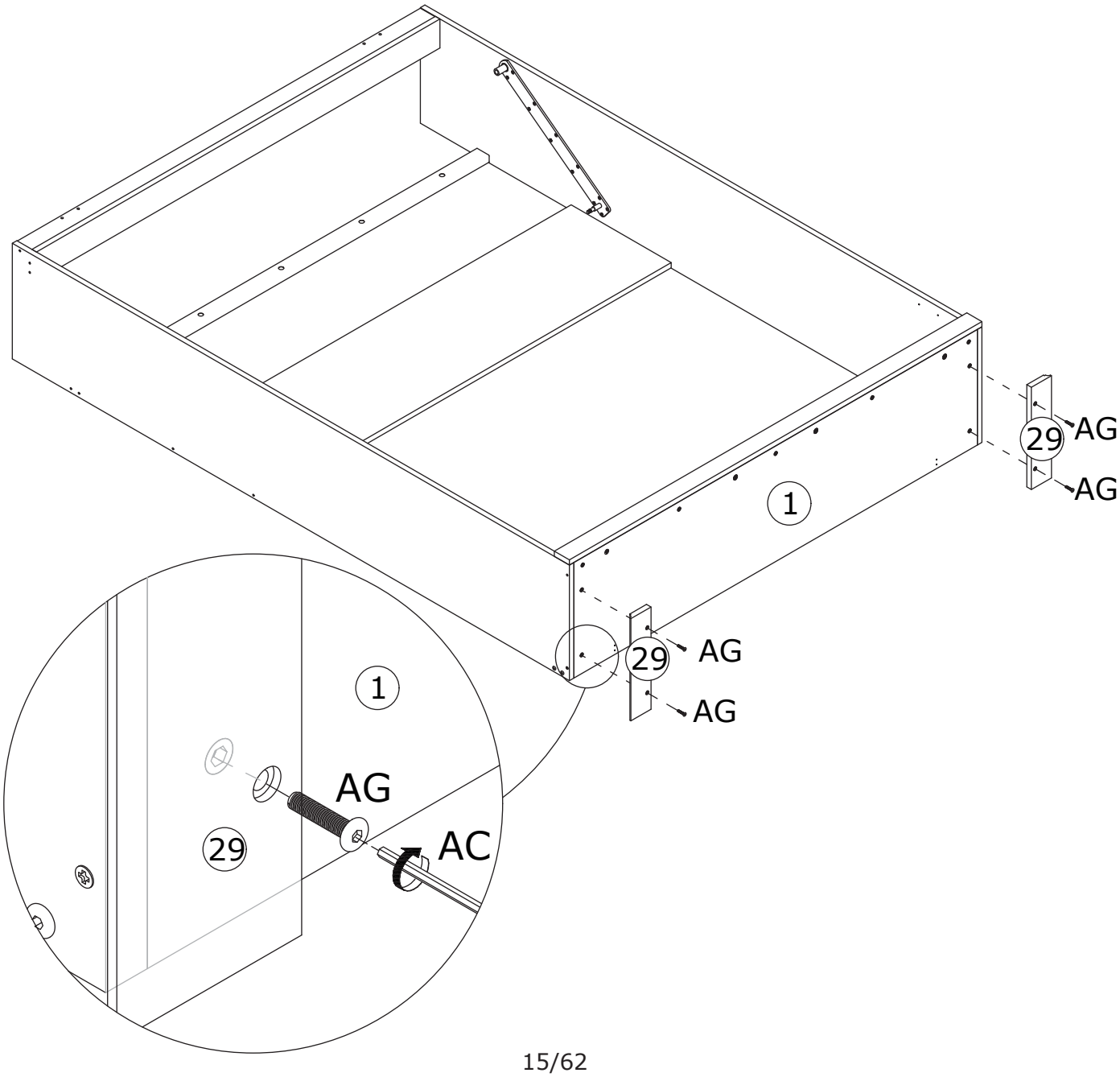

9

AG x 5	AC x 1	
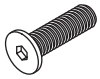 CRG0625A	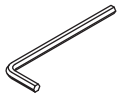 M4	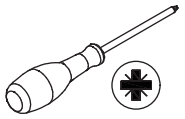

Secure Panel 33 to Panel 1 with screws (AG).

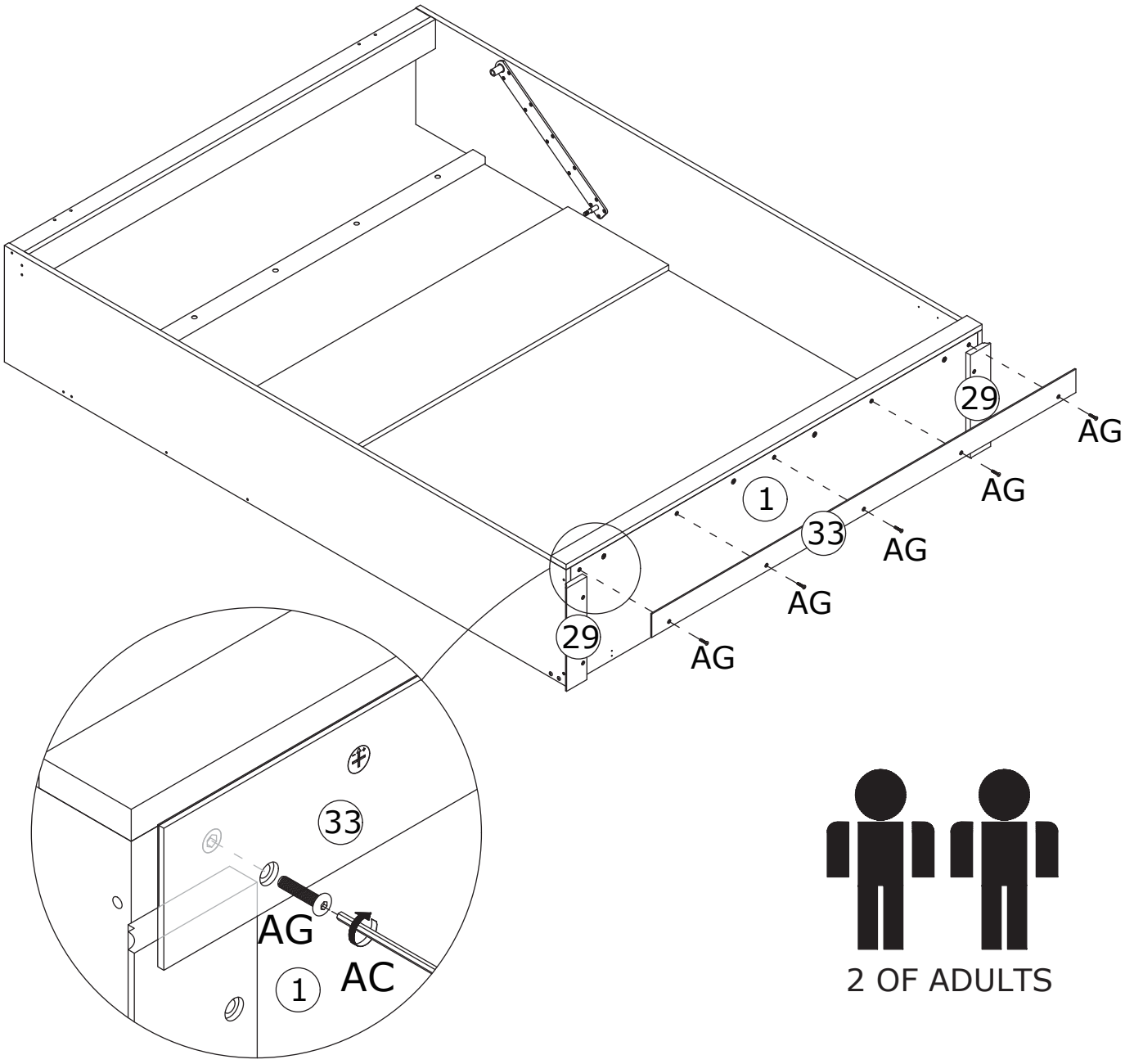

2 OF ADULTS

If there is a keel inside the wall, please select Option A
If there is no keel inside the wall, please select Option B.

Option A

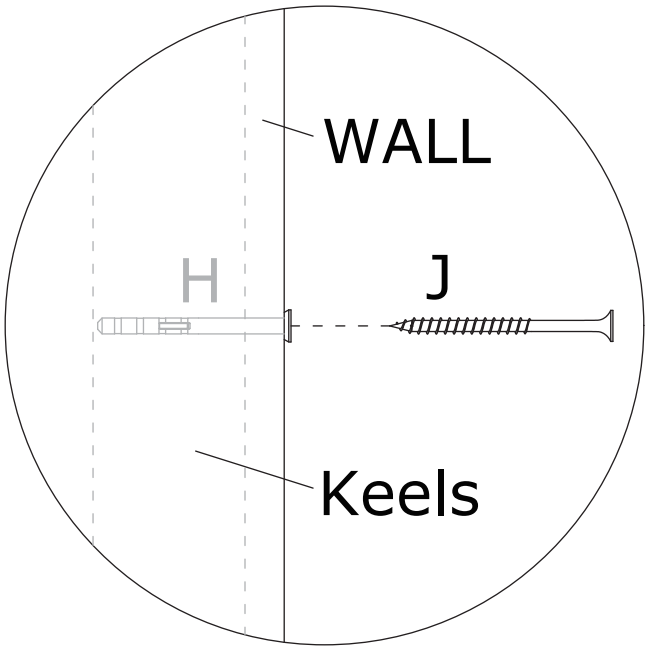

Option B

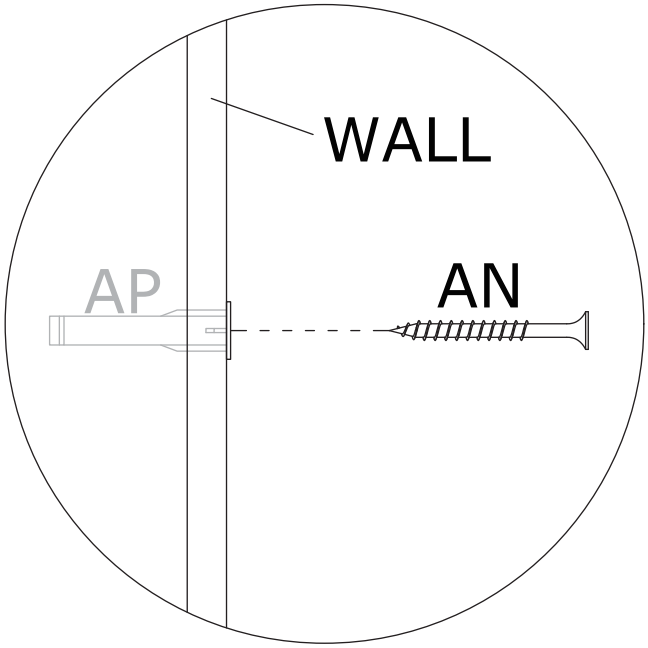

10

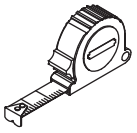

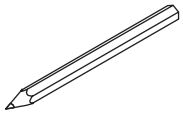

Option A

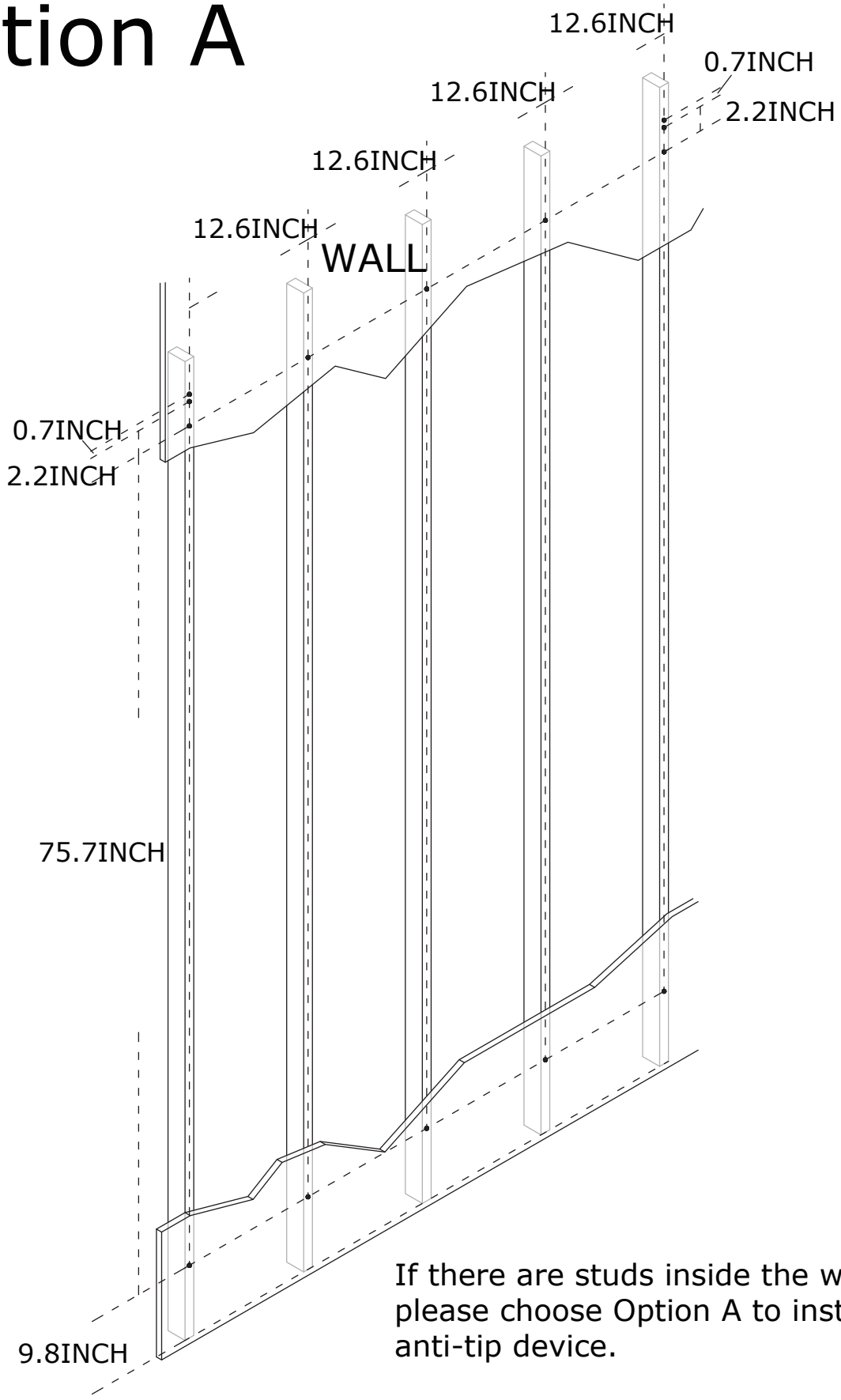

If there are studs inside the wall, please choose Option A to install the anti-tip device.

11

H x 14

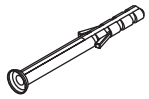



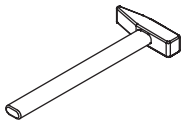

Option A

Drill holes at the marked points on the wall, then install component (H).

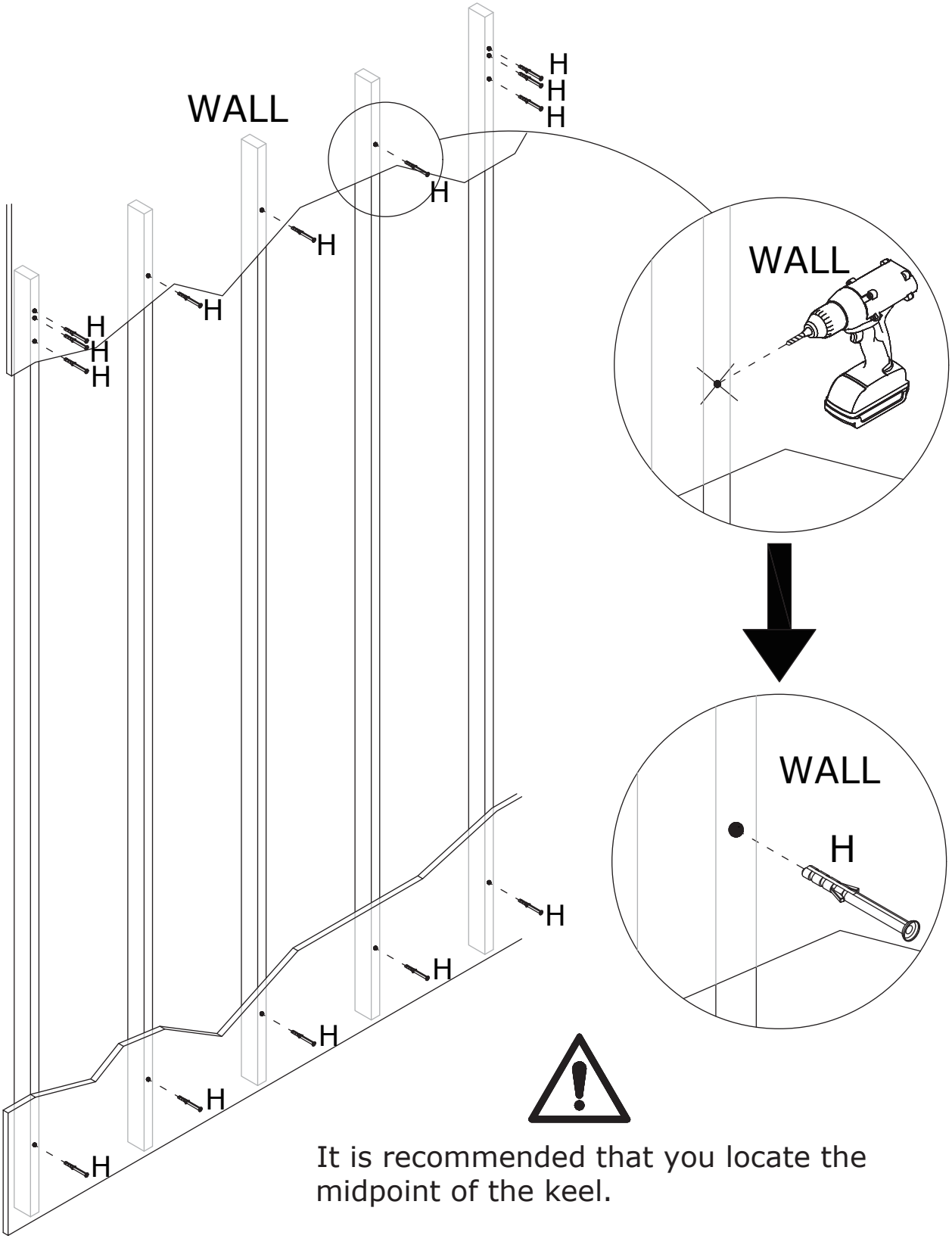

It is recommended that you locate the midpoint of the keel.

12

J x 10

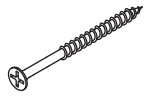

CRD0580A

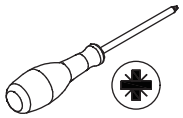



J



CRD0580A

AN



CRD0468A

Option A

Secure parts (11) and (12), to the wall-mounted anchors with screws (J).

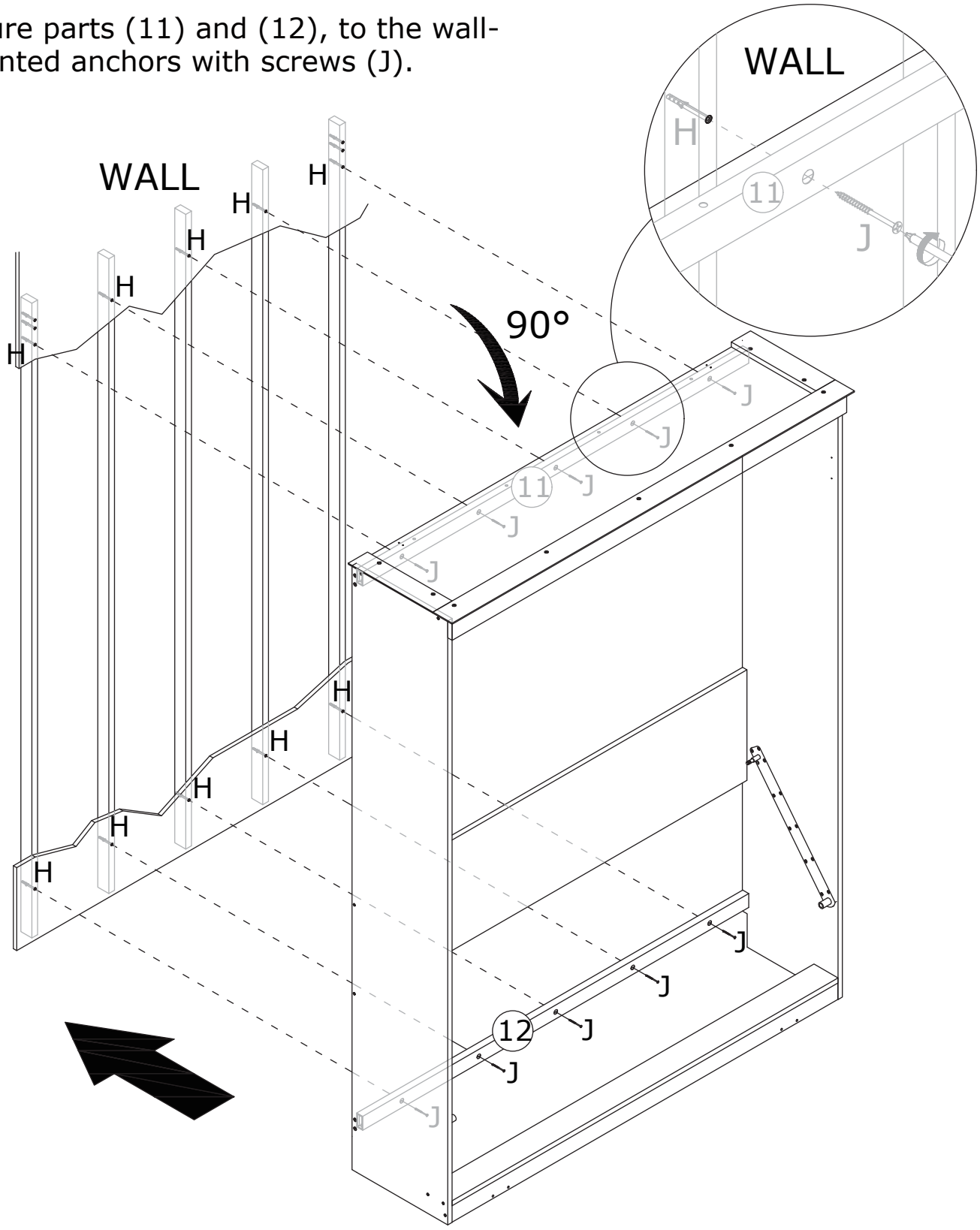

13

E x 4	X x 2	
 CRD3514A		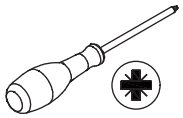

Option A

	E	AB	AH
	 CRD3514A	 CRD0416A	 CRD3516A

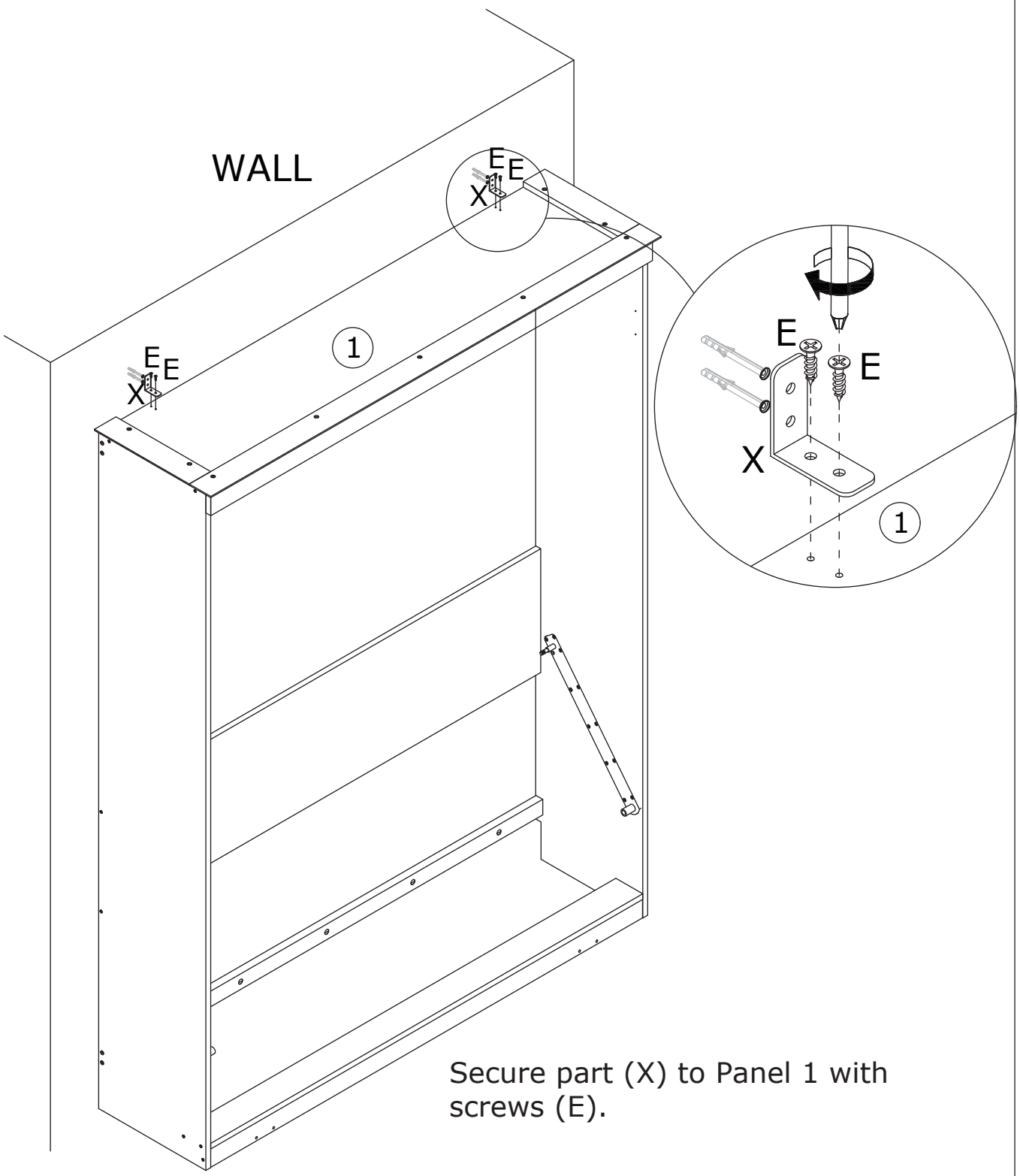

Secure part (X) to Panel 1 with screws (E).

14

J x 4

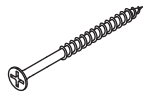

CRD0580A

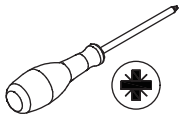

Option A



J



CRD0580A

AN

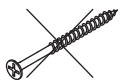

CRD0468A

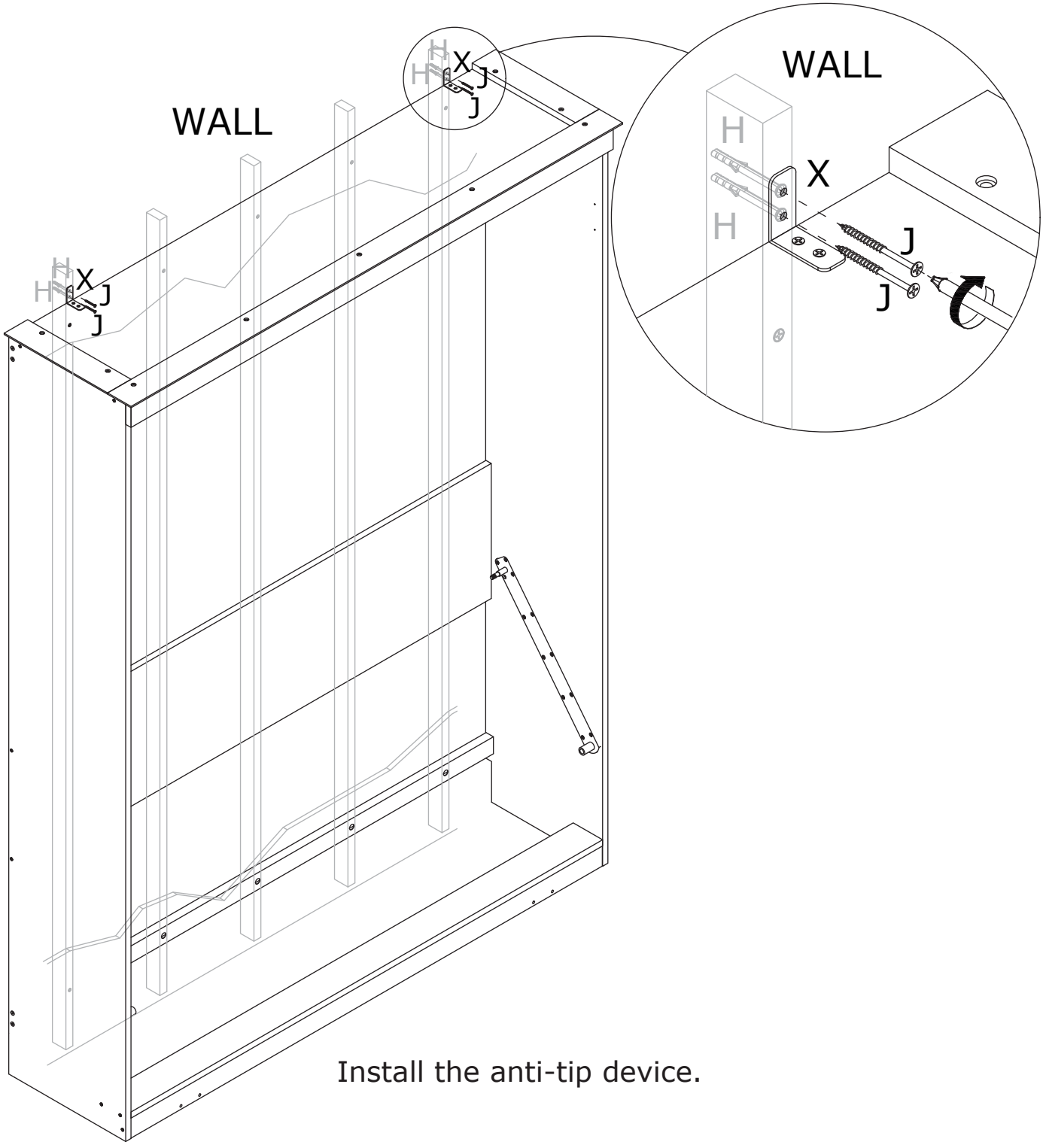

Install the anti-tip device.

15

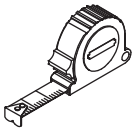

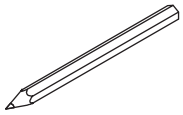

Option B

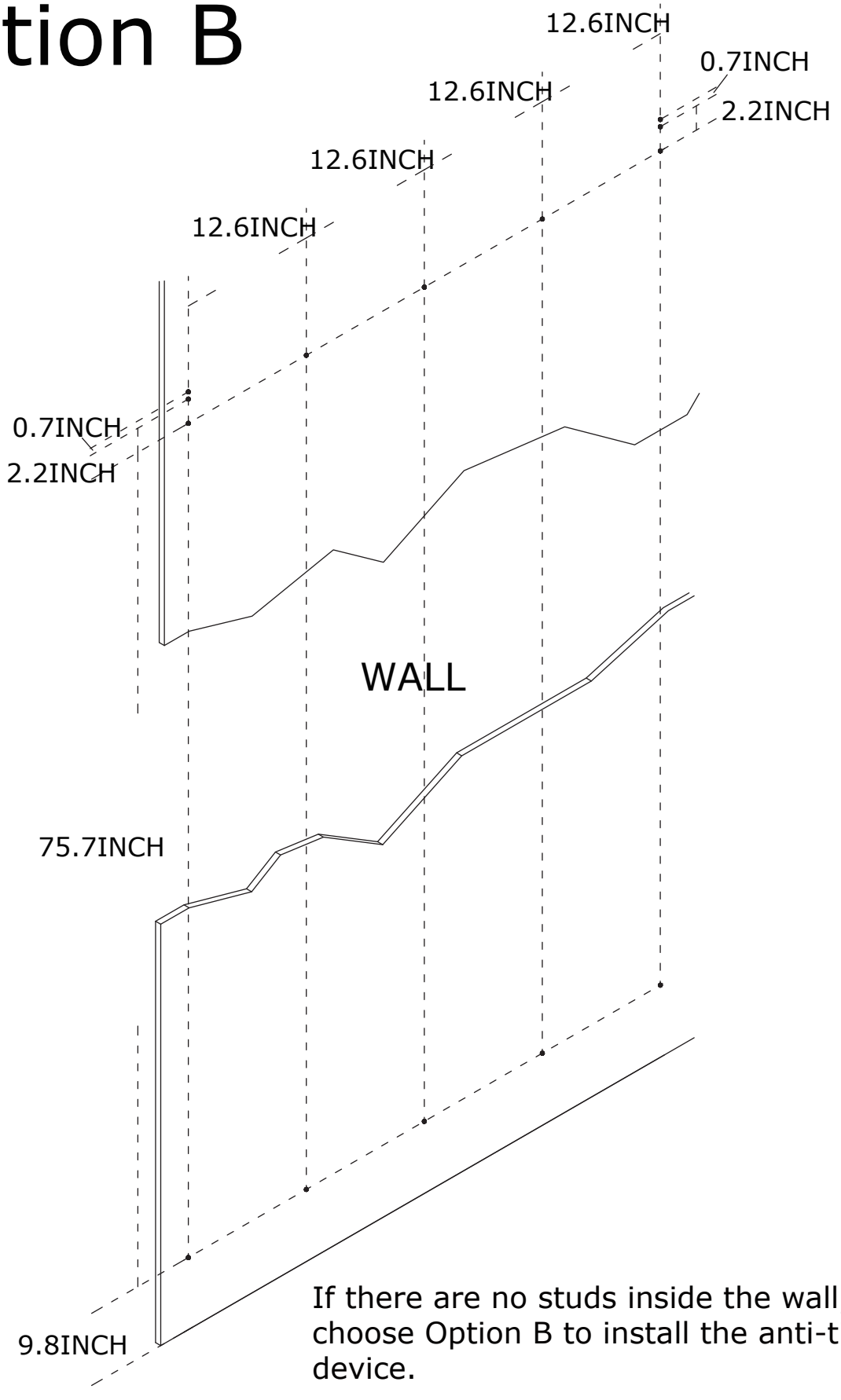

If there are no studs inside the wall, please choose Option B to install the anti-tip device.

16

AP x 14

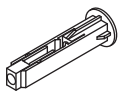



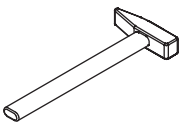

Option B

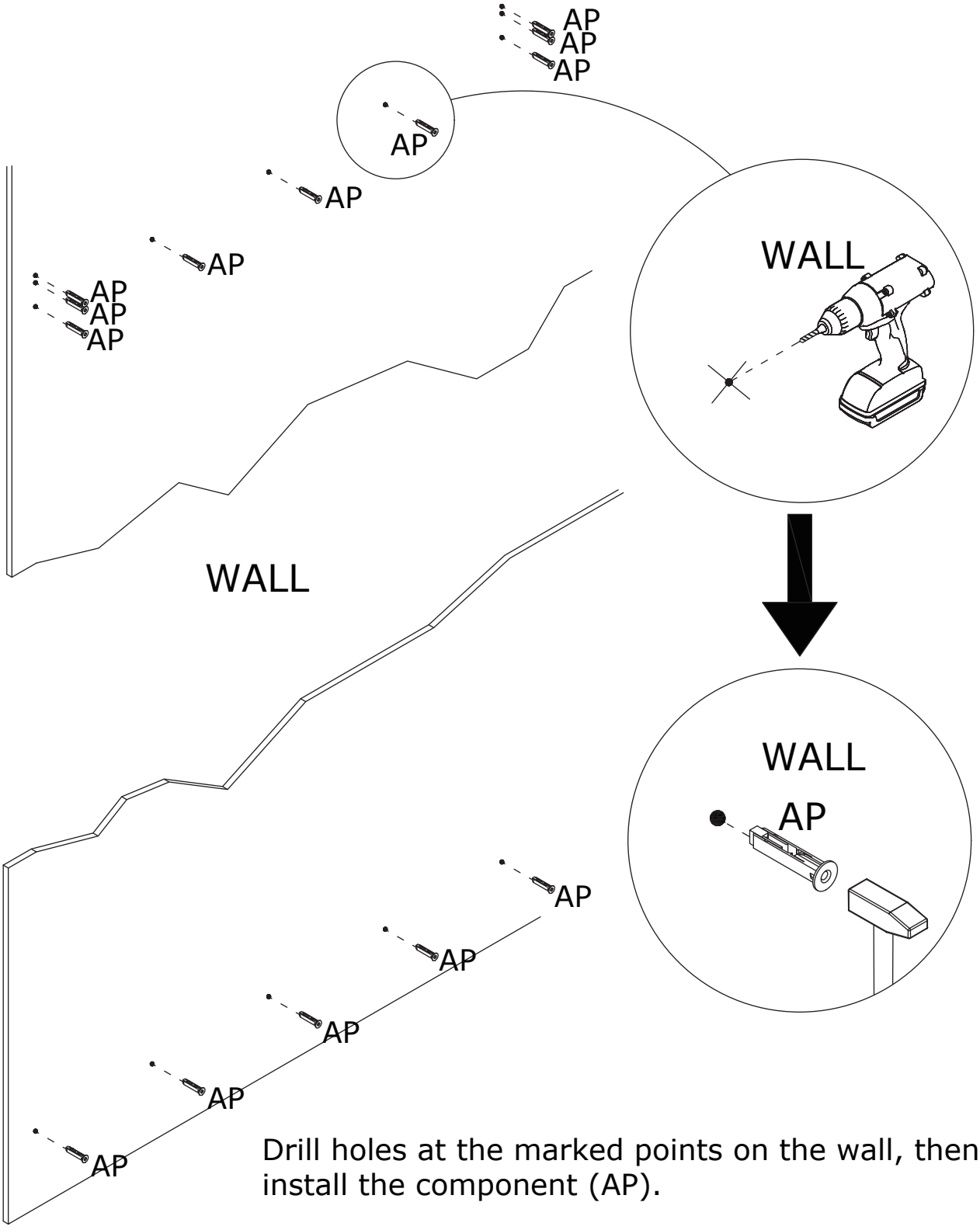

Drill holes at the marked points on the wall, then install the component (AP).

17

AN x 10

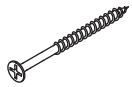

CRD0468A

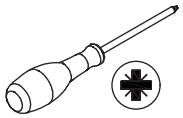



J

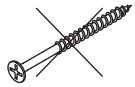

CRD0580A

AN



CRD0468A

Option B

Secure parts (11) and (12), to the wall-mounted anchors with screws (AN).

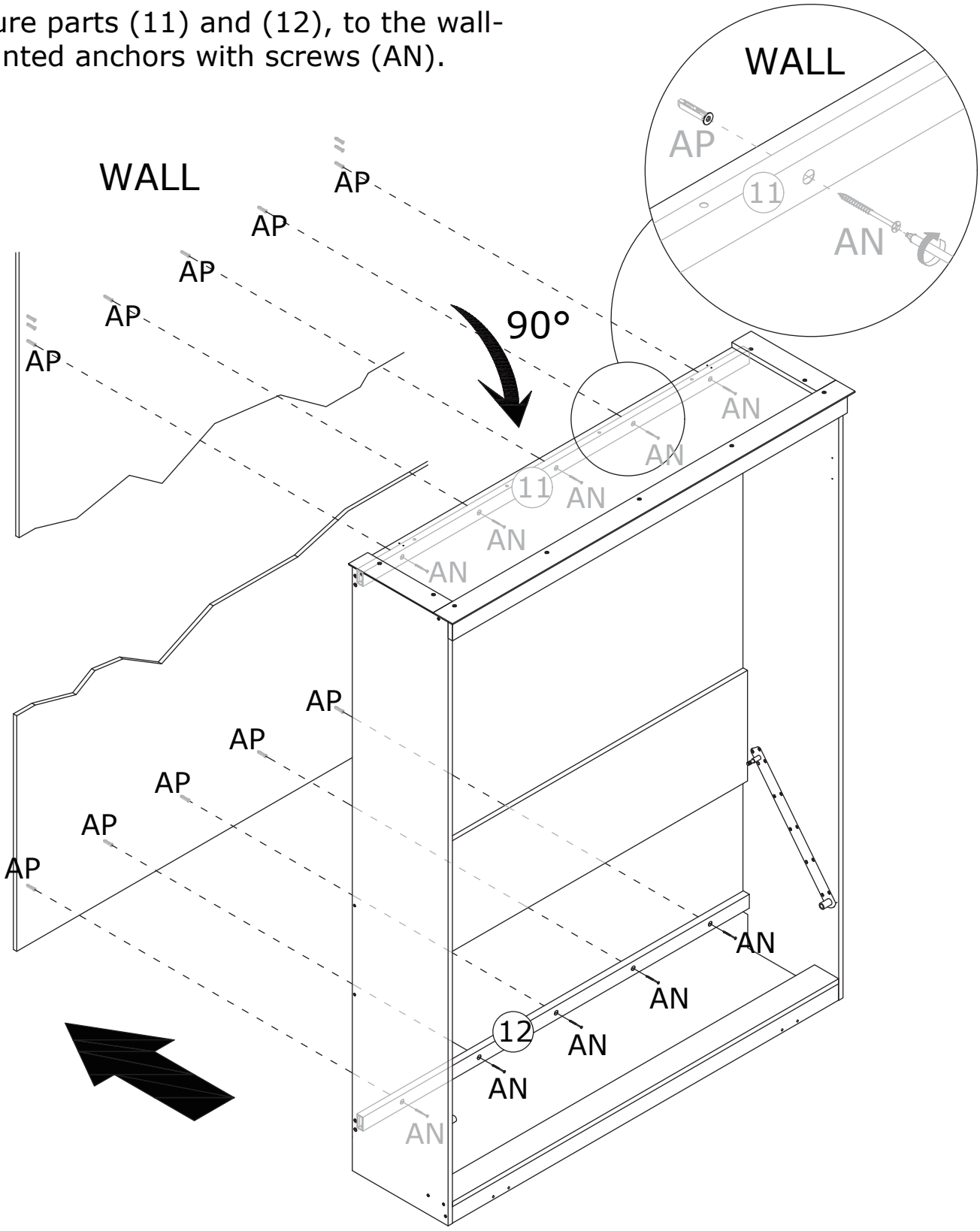

18

E x 4	X x 2	
 CRD3514A		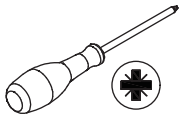

Option B

	E	AB	AH
	 CRD3514A	 CRD0416A	 CRD3516A

Secure part (X) to panel 1 with screws (E).

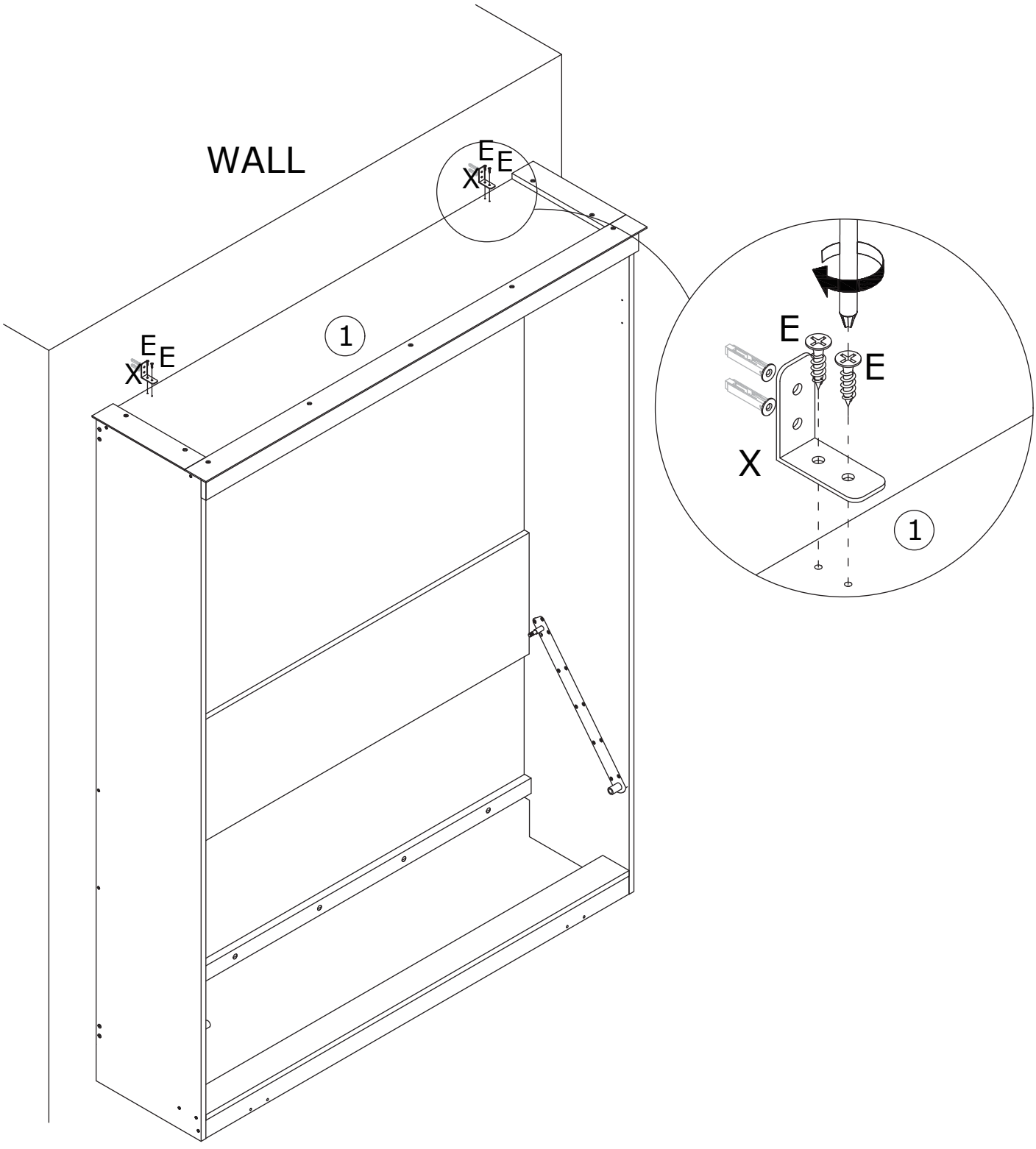

19

AN x 4

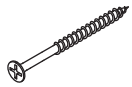

CRD0468A

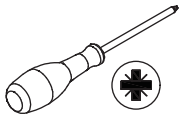



J

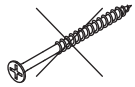

CRD0580A

AN



CRD0468A

Option B

Install the anti-tip device.

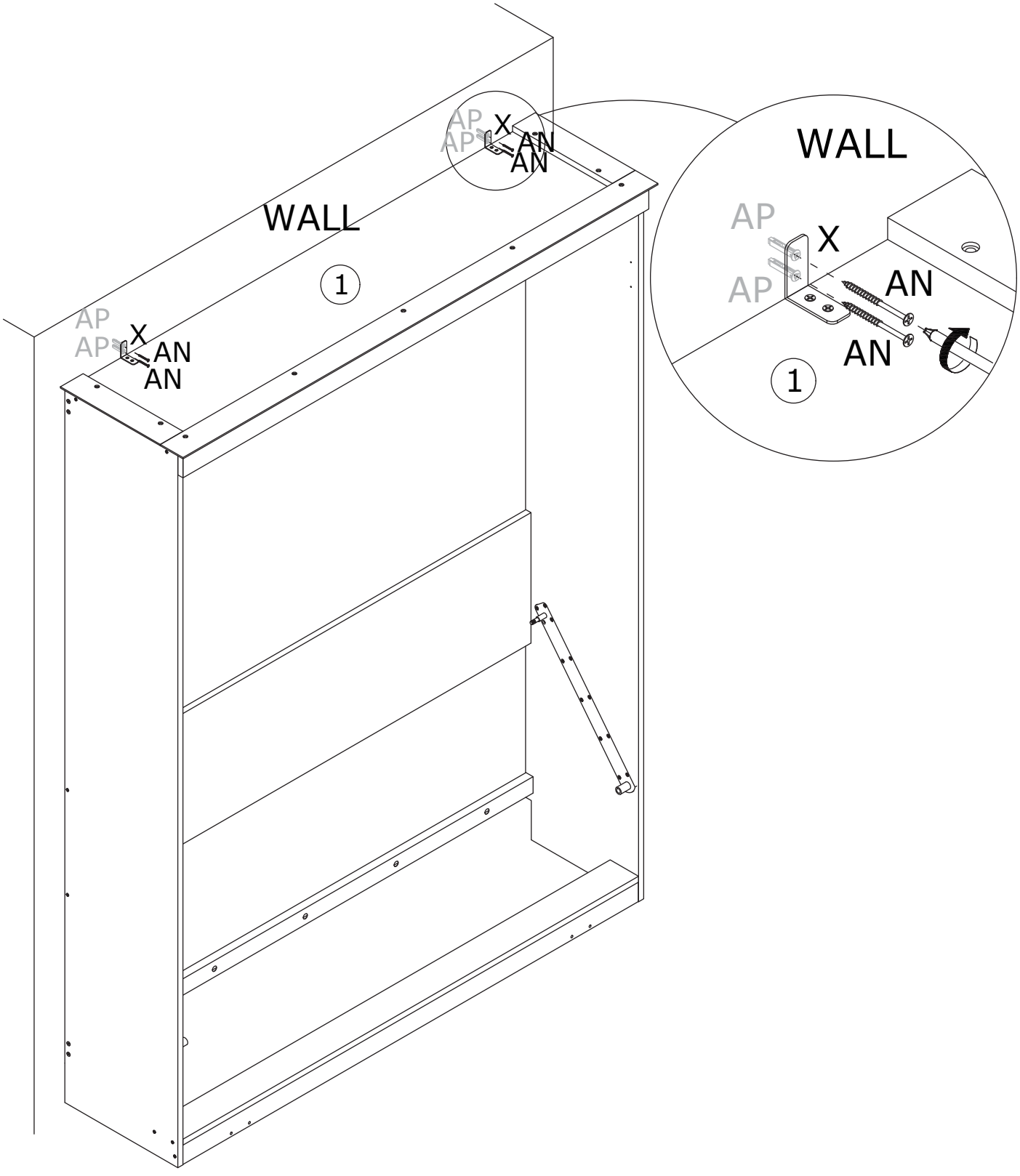

After installing the anti-tip device, please perform a pull test on the cabinet to prevent potential hazards caused by the device being loosely installed and the cabinet tipping over.

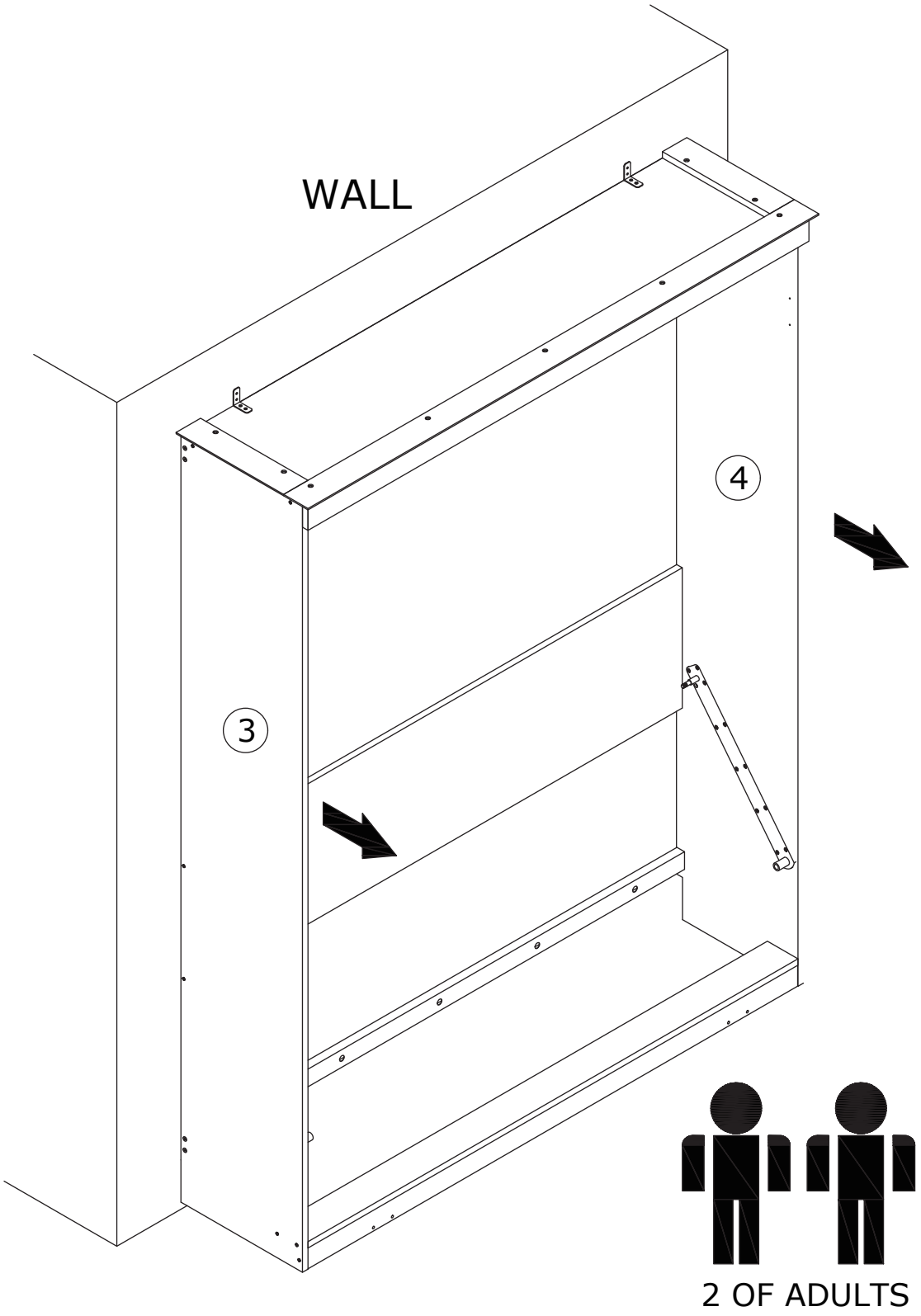

20

M x 16	AC x 1	
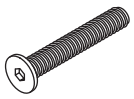	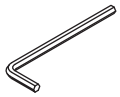	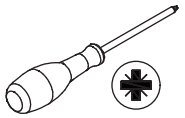
CRG0645A	M4	

Secure parts (16), (17) and (18) to part (14) with screws (M).

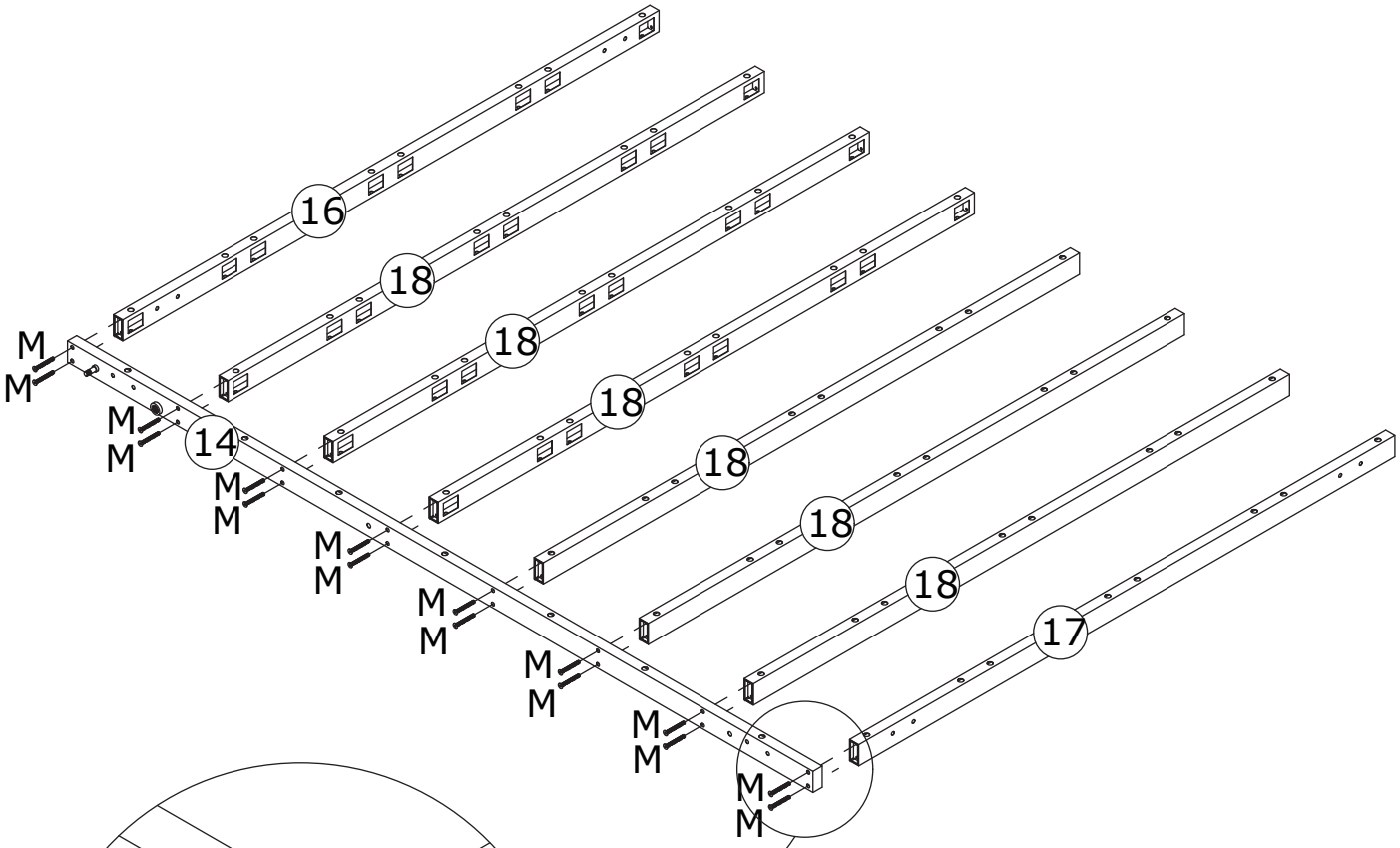

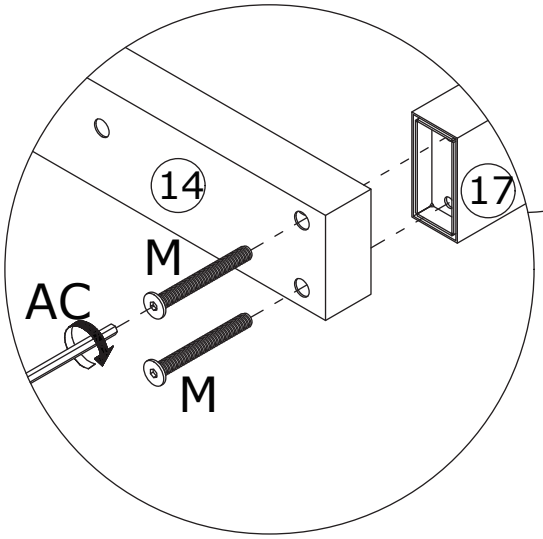



Please ensure the corners are equal diagonally. If not, loosen some screws, make adjustments, and then tighten again.

21

M x 16	AC x 1	
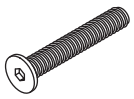	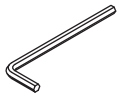	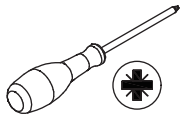
CRG0645A	M4	

Connect parts (16), (17) and (18) to part (15) with screws (M).

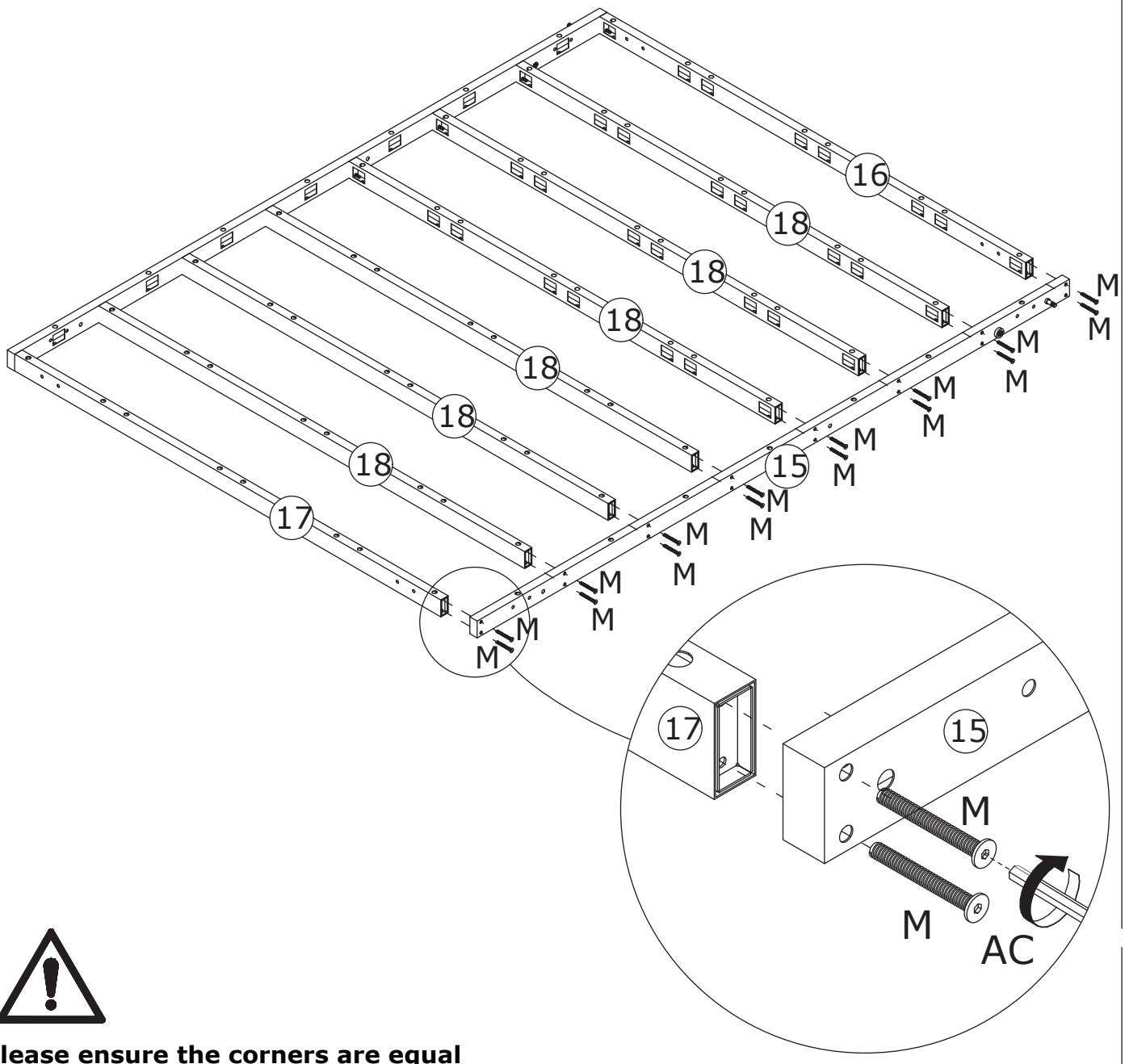

Please ensure the corners are equal diagonally. If not, loosen some screws, make adjustments, and then tighten again.

22

C x 8

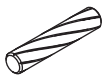

CRF0830A

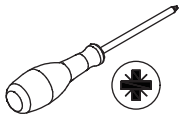

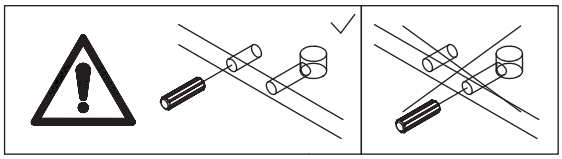

Connect Panels 7, 8, 9 and 10 to Panels 34, 35, 36 and 37 with dowel pins (C).

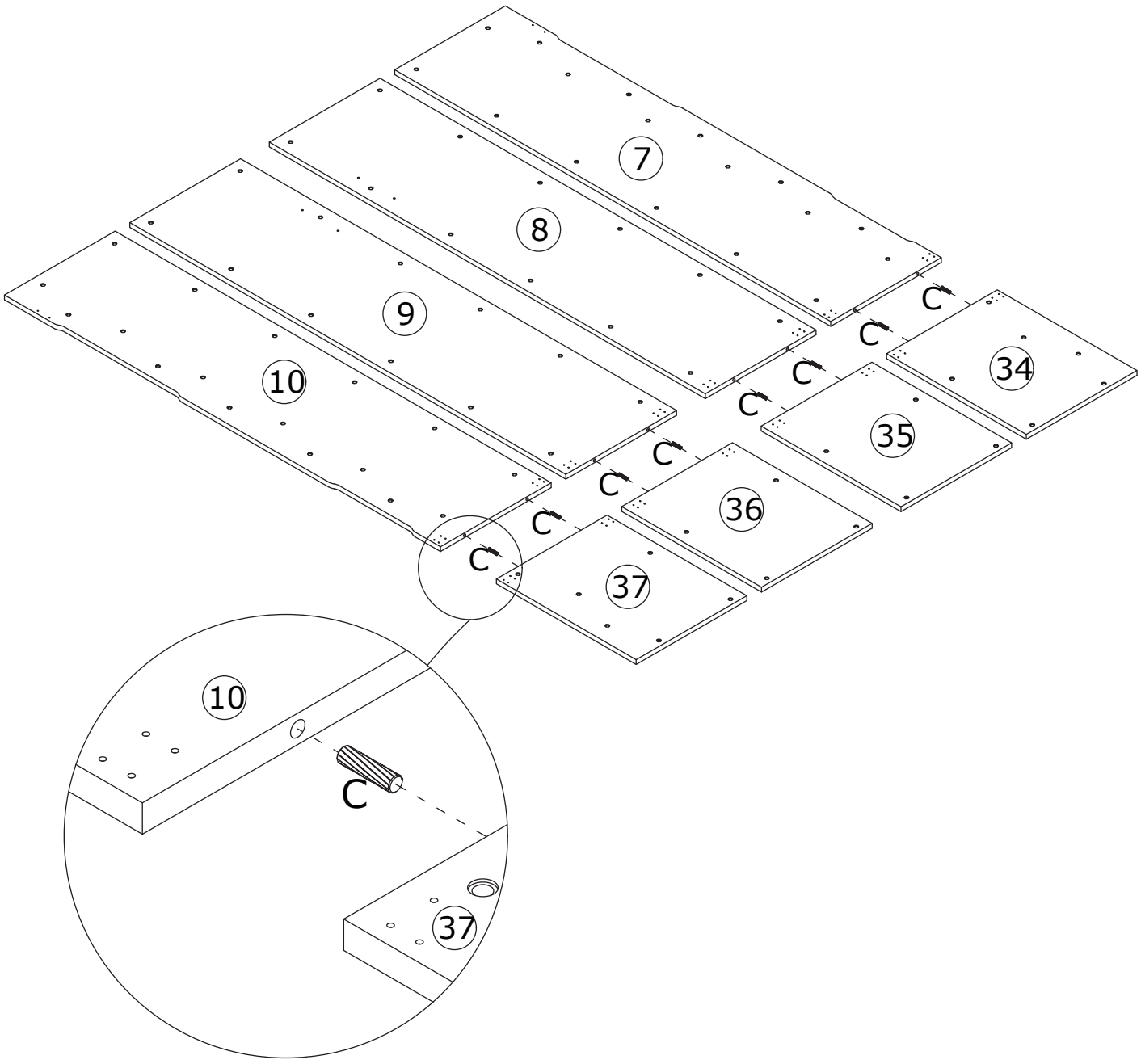

23

E x 64	AQ x 8	
 CRD3514A	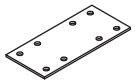	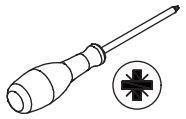



E	AB	AH
 CRD3514A	 CRD0416A	 CRD3516A

Secure iron plates (AQ) to Panels 7 and 34, Panels 8 and 35, Panels 9 and 36, and Panels 10 and 37 with screws (E).

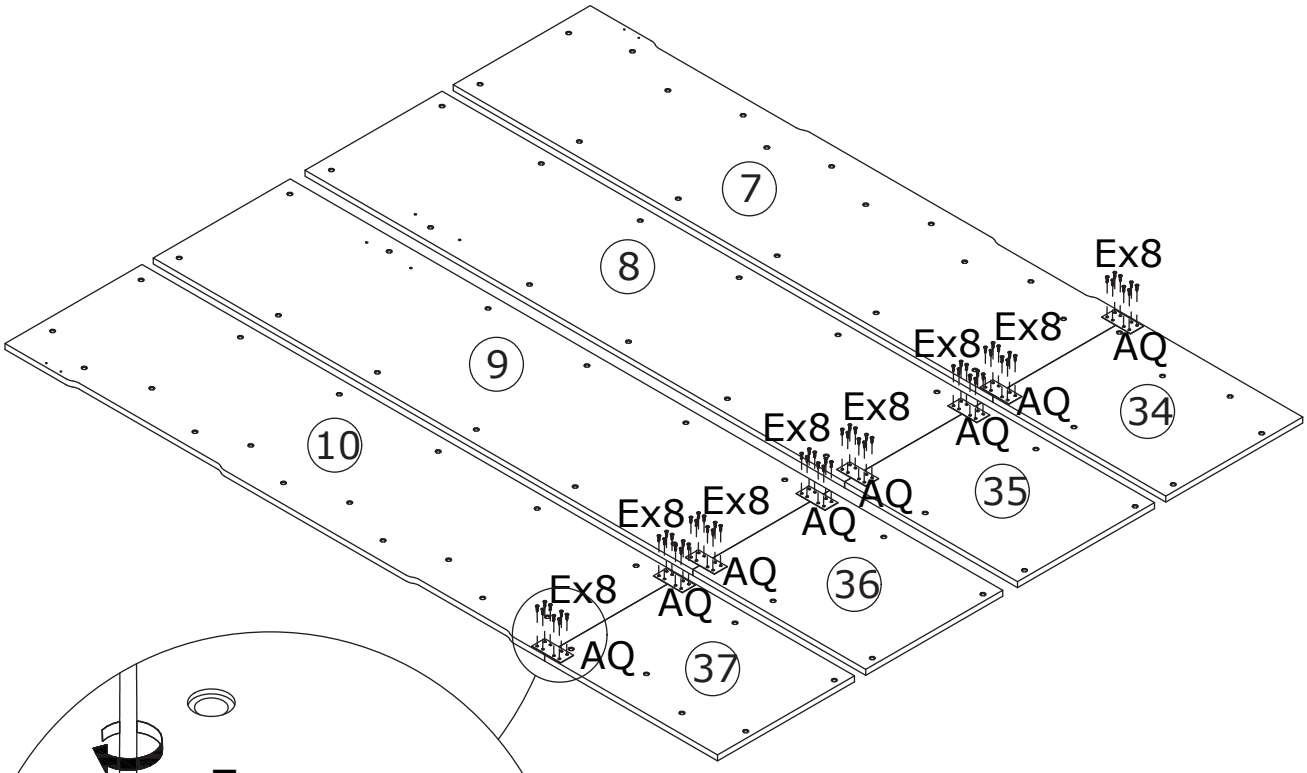

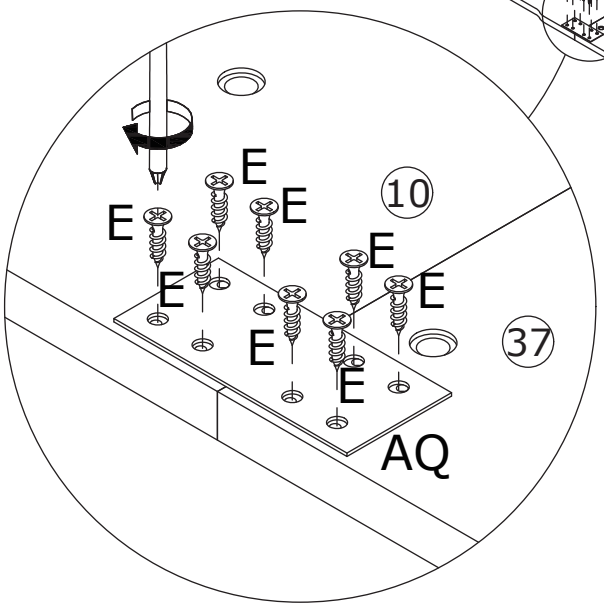

24

G x 32	AC x 1	
CRG0612A	M4	

Connect parts (16), (17) and (18) to Panels 35, 36, 8 and 9 with screws (G).
Please note, the holes are close to part 17.

Please note, the holes are close to part 17.

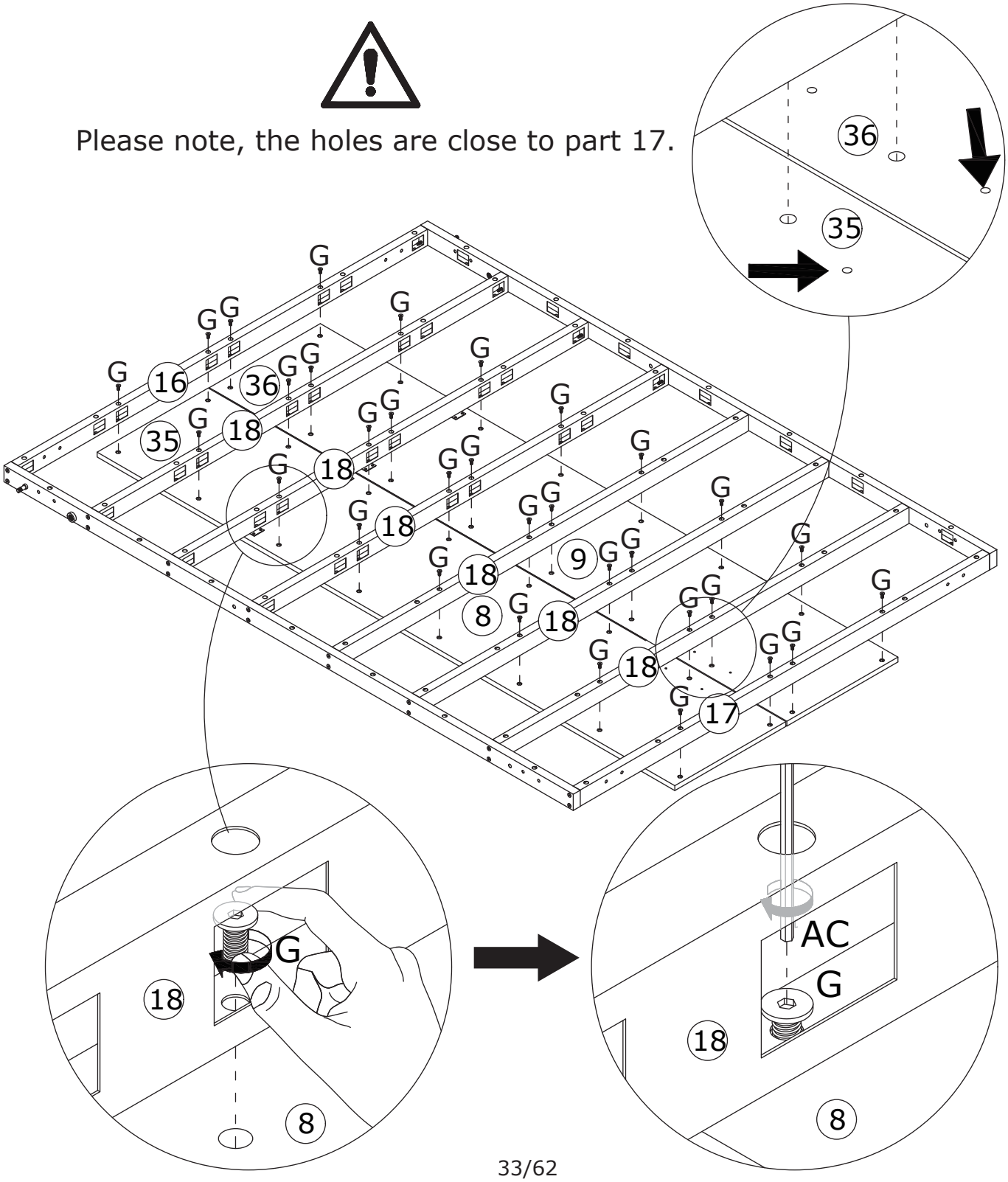

25

L x 4	AC x 1	
	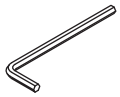	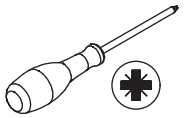
CRG0616A	M4	

	L	AK
		
	CRG0616A	CRG0616A

Connect part (22) to part (16) with screws (L).

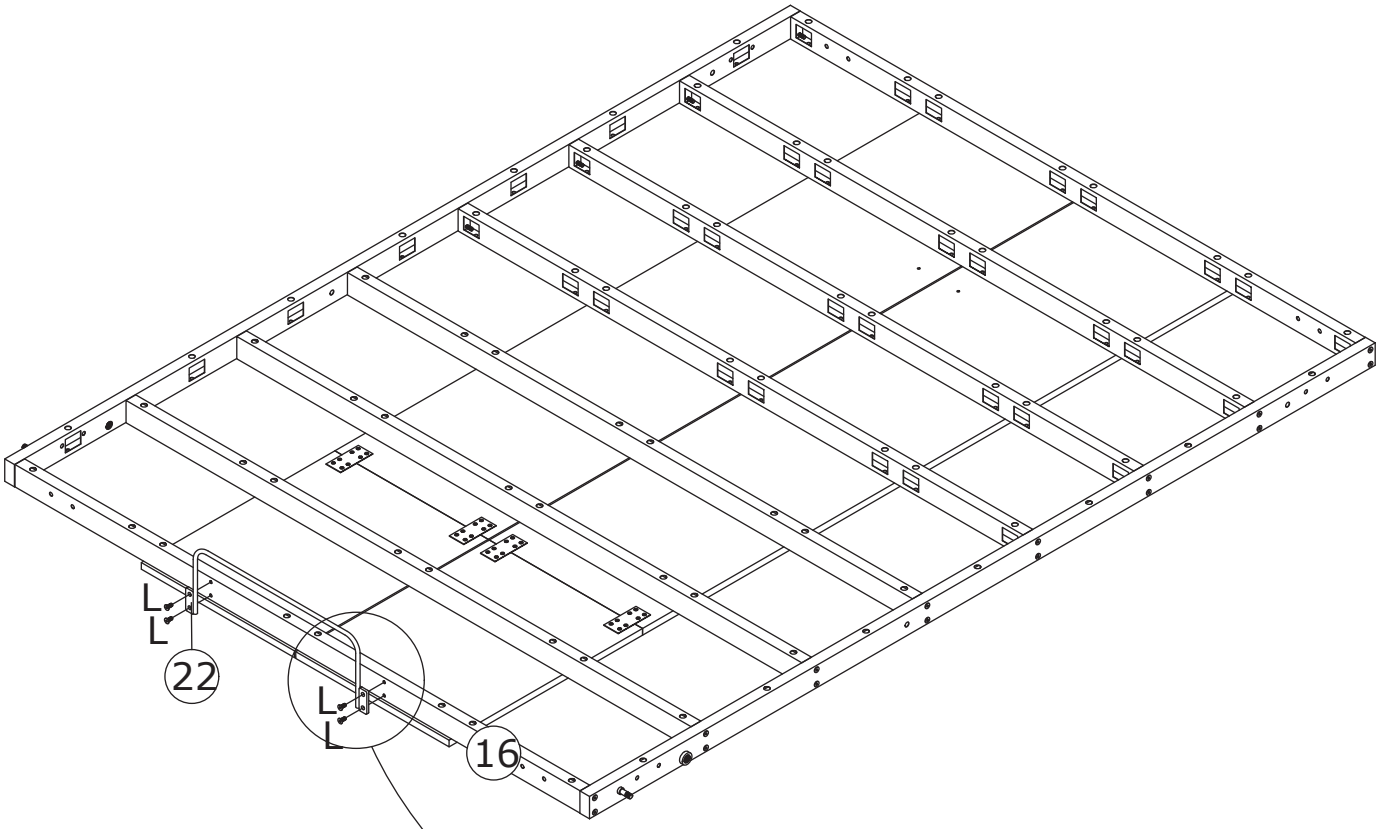

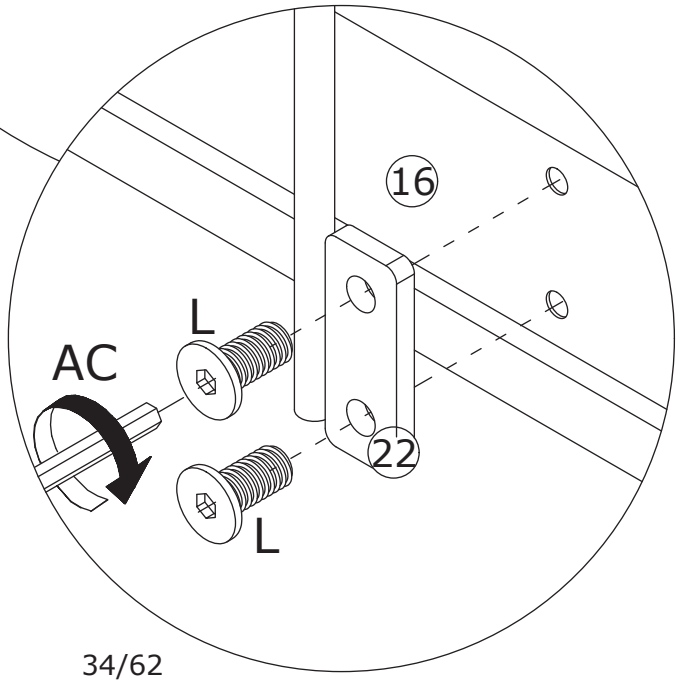

26

N x 4	Q x 16	AE x 1	AF x 1	AJ x 16	
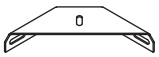		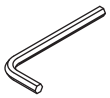 M5	 M8	 CRG0835A	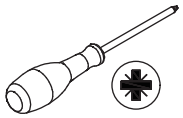

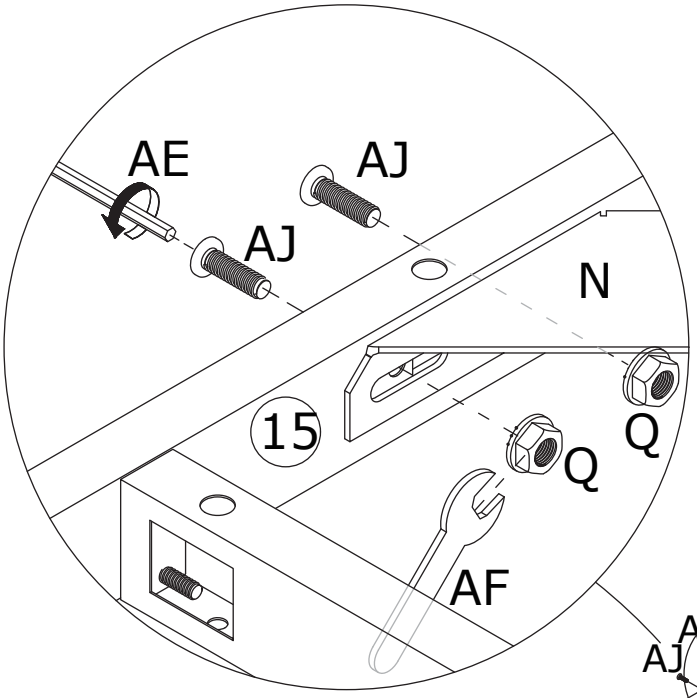

Install part (N) to the assembly unit with screws (AJ), nuts (Q).

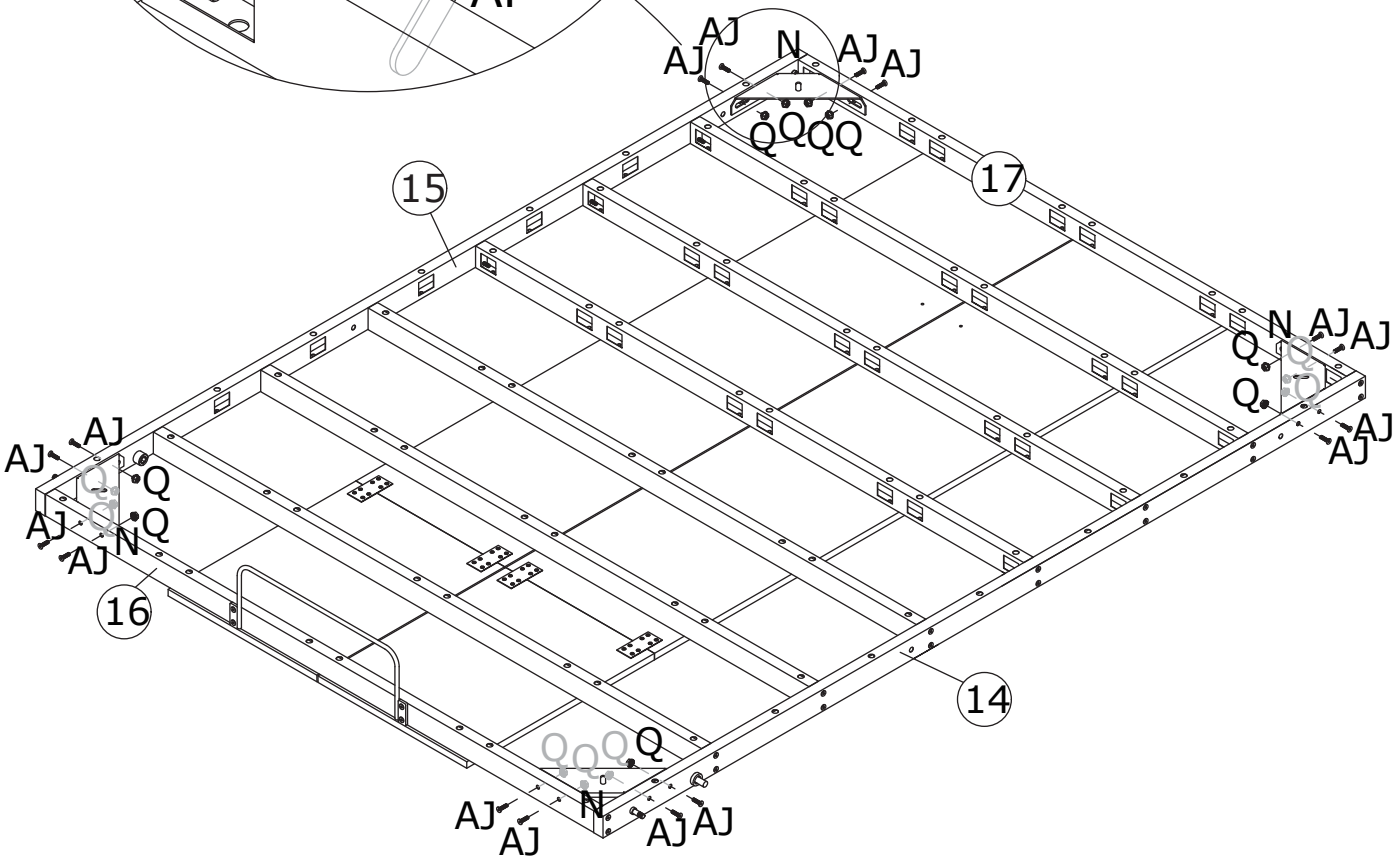

27

S x 4	AF x 1	
	 M8	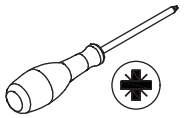

Secure Part 19 and Part 28 to Part 15, Part 20 and Part 27 to Part 14 with nuts (S).

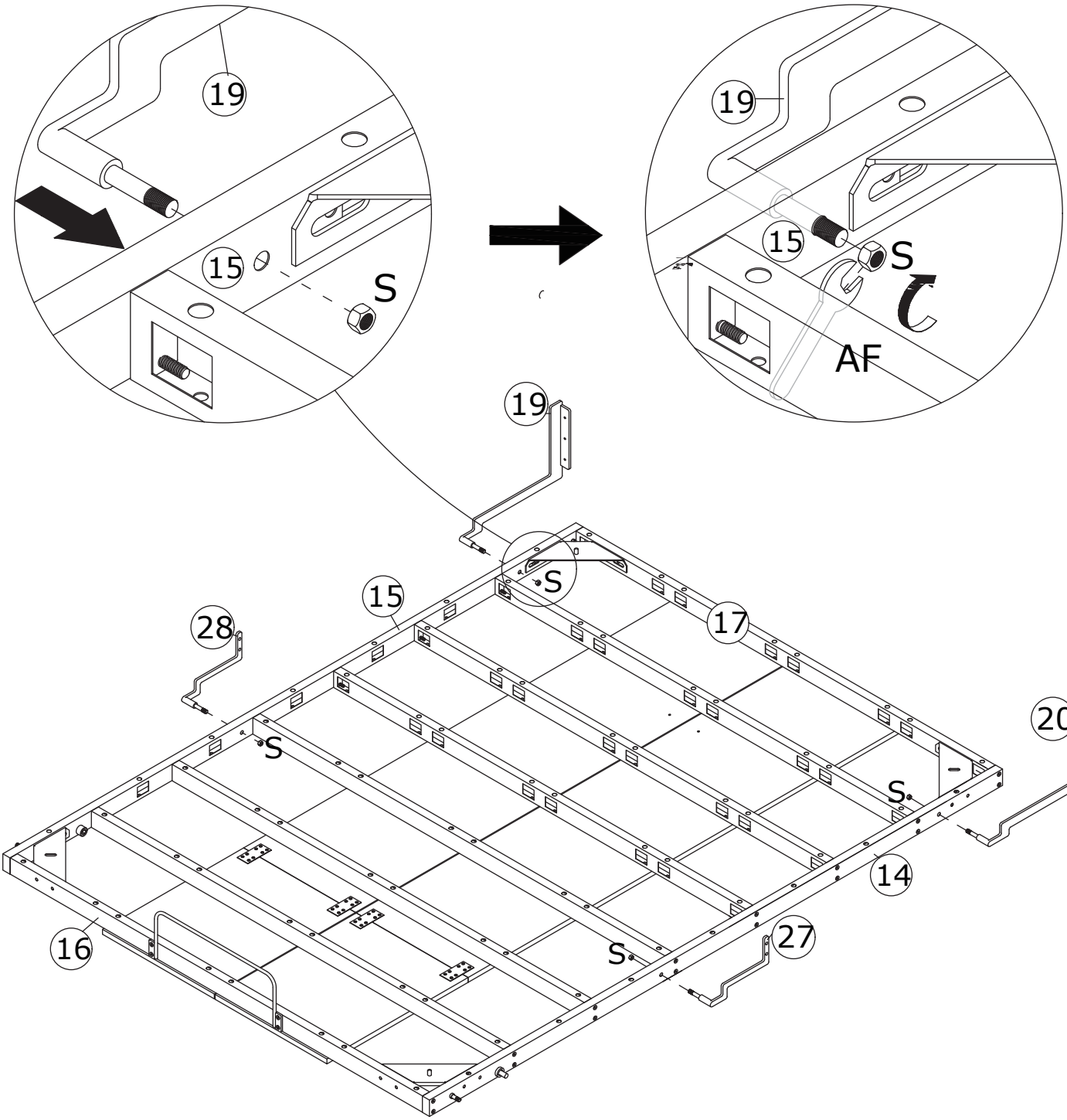

28

R x 2	T x 2	AF x 1	
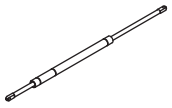		 M8	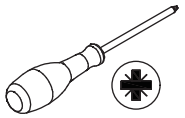

Install part (R) to parts (14) and (15) with nuts (T).

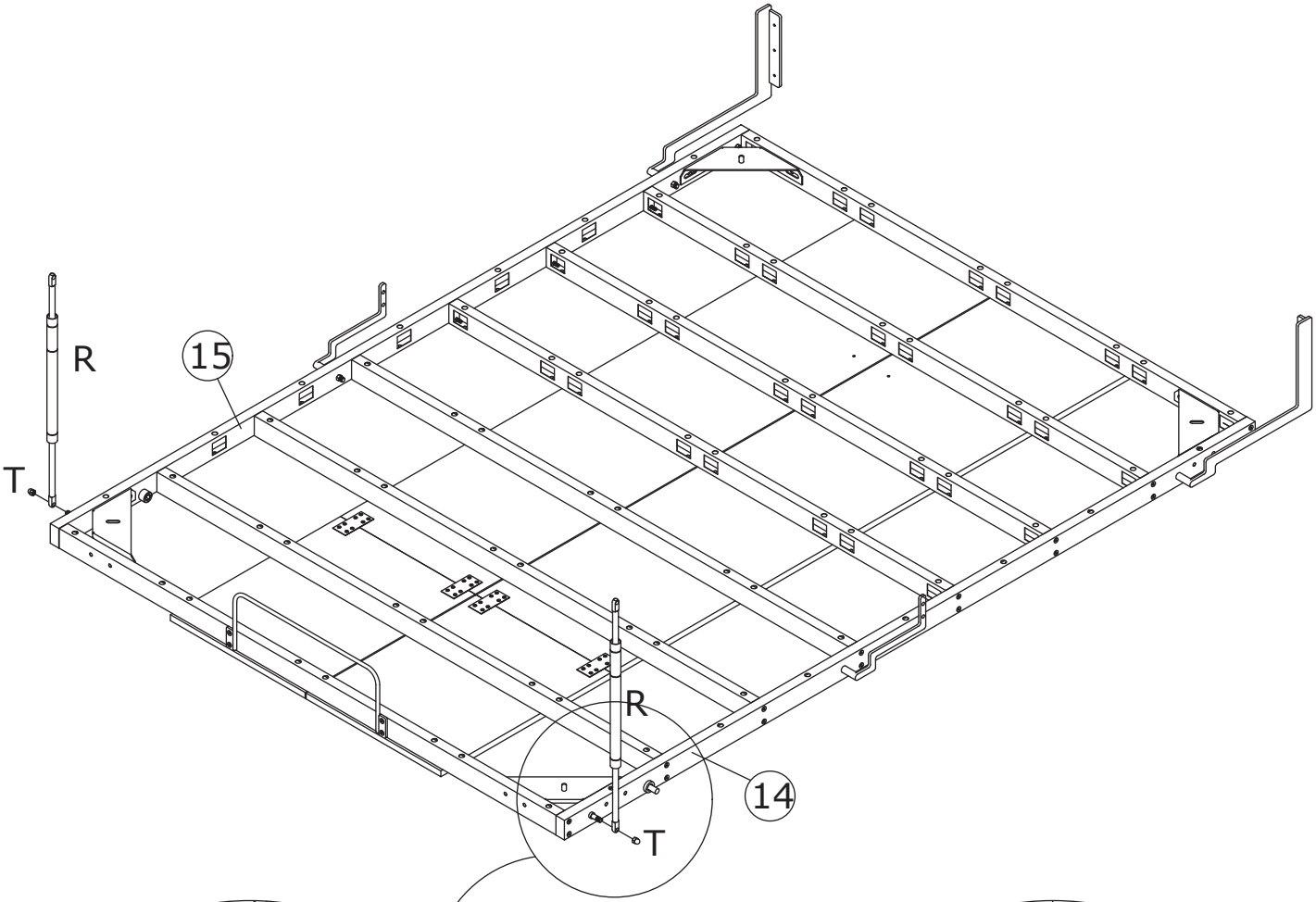

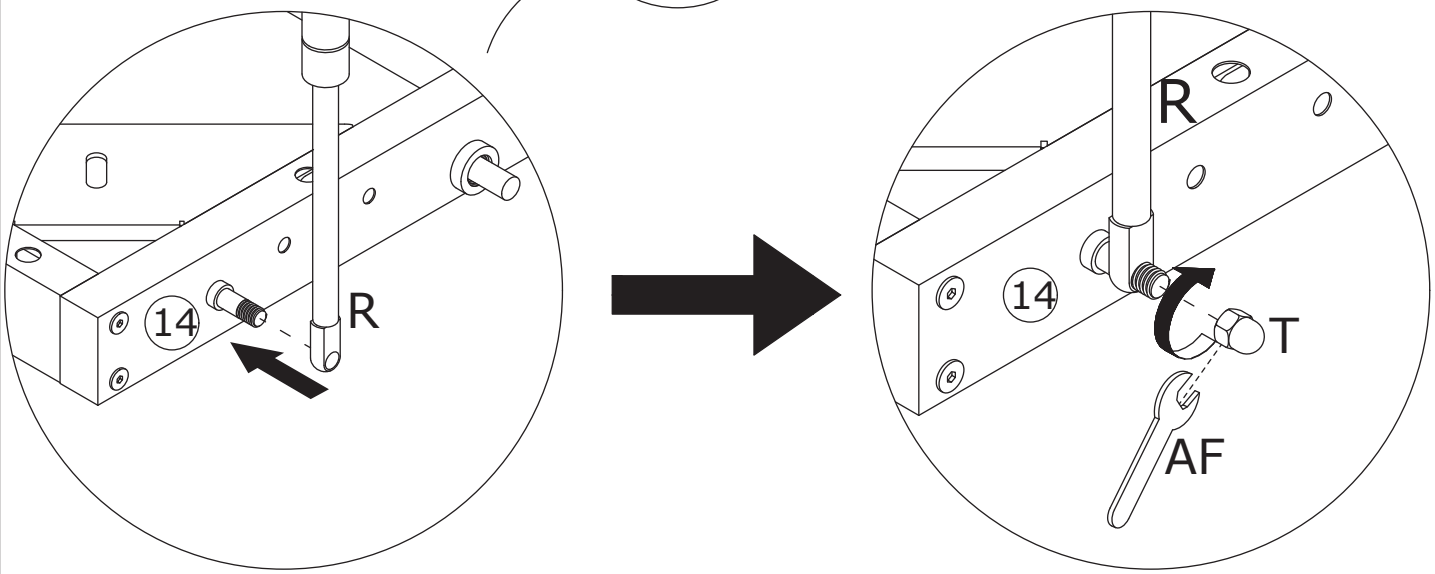

29

Lift the bed frame.

Keep hands away from this area when lifting the bed frame to avoid pinching.

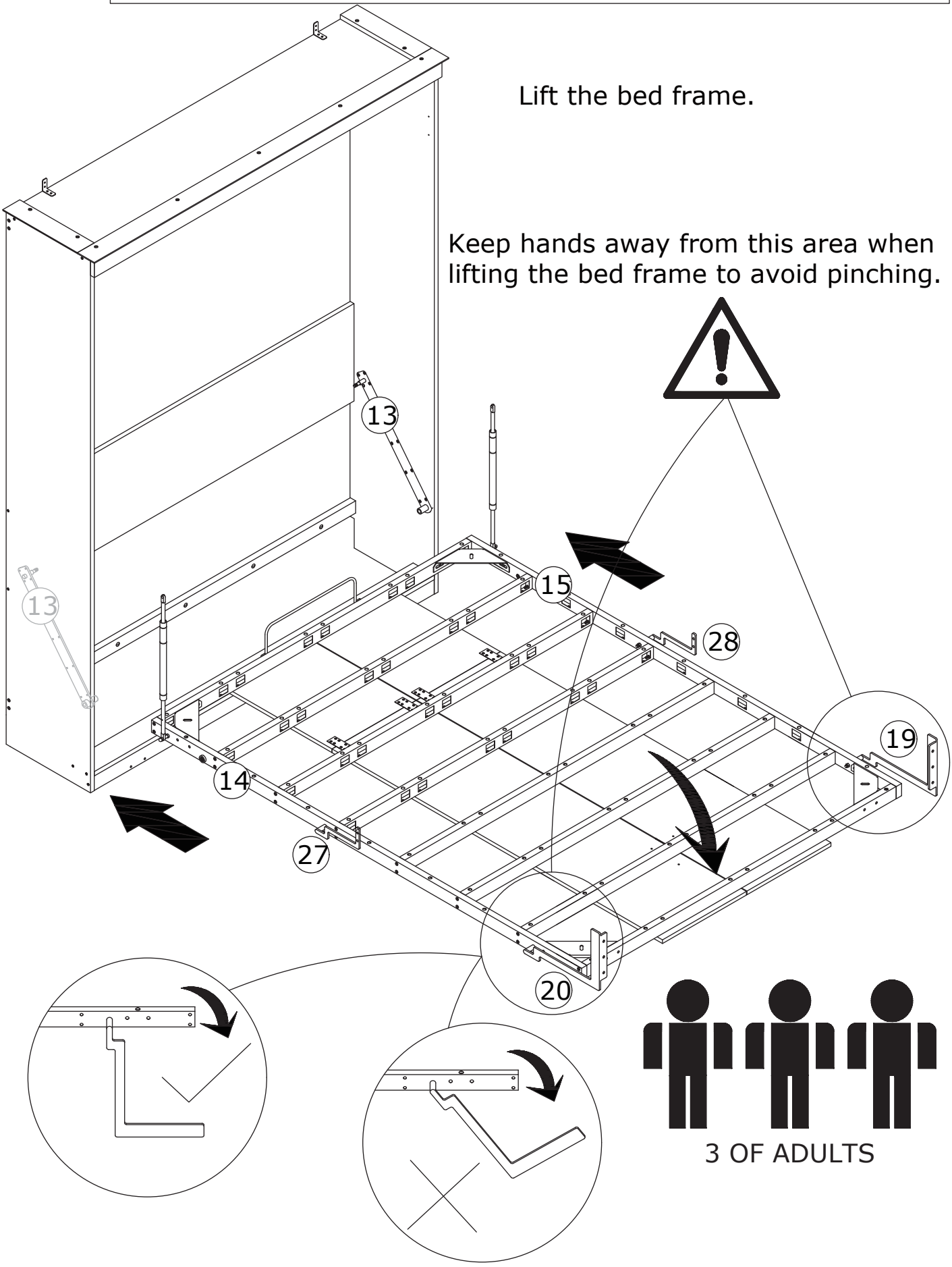

3 OF ADULTS

30

AD x 1

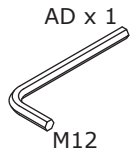

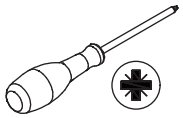

Secure parts (14) and (15) to part (13) with part (23).

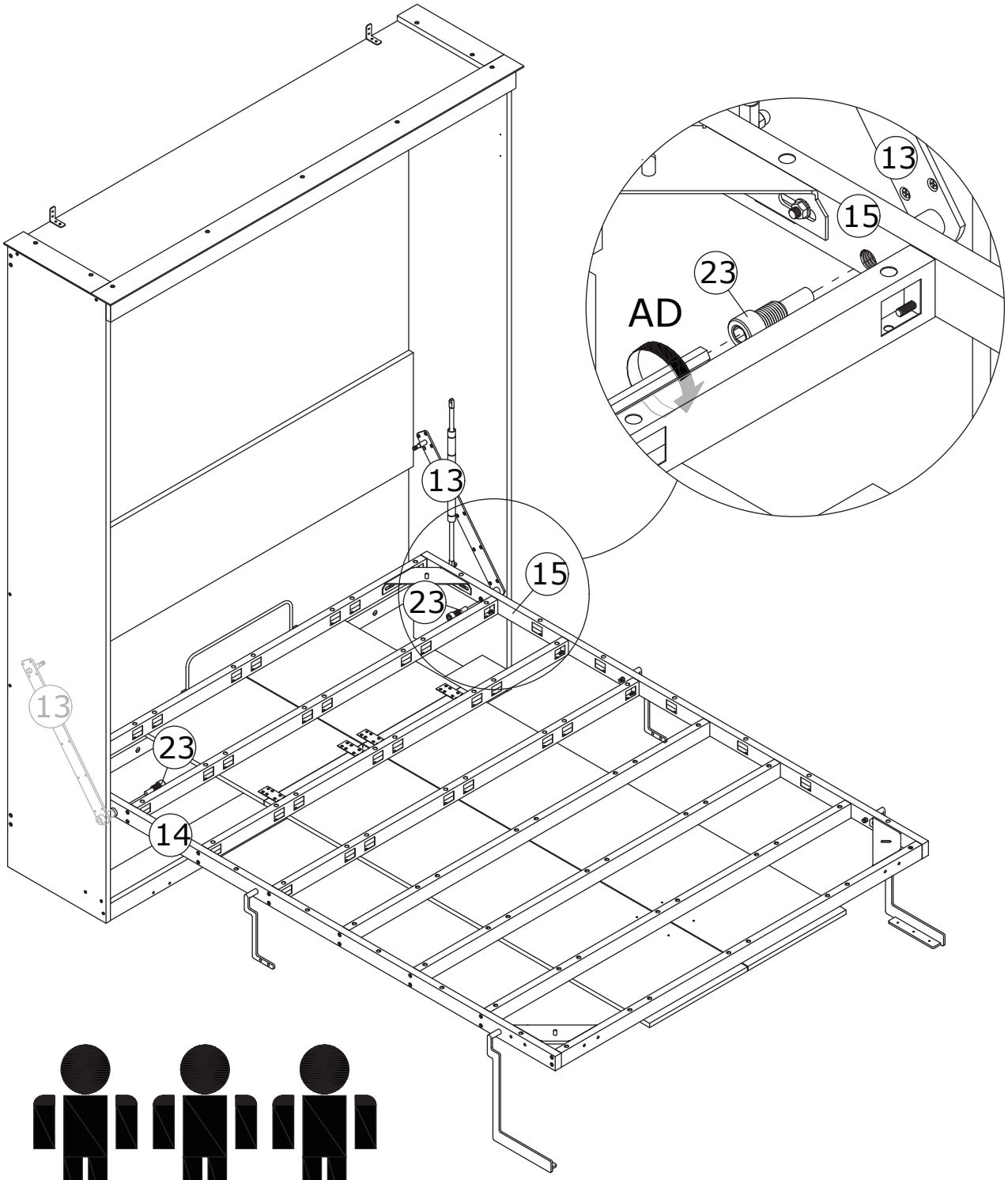

3 OF ADULTS

31

U x 2	V x 4	
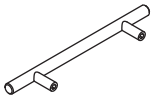	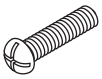 CRE0420A	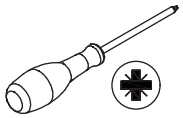

Secure handles (U) to Panels 8 and 9 with screws (V).

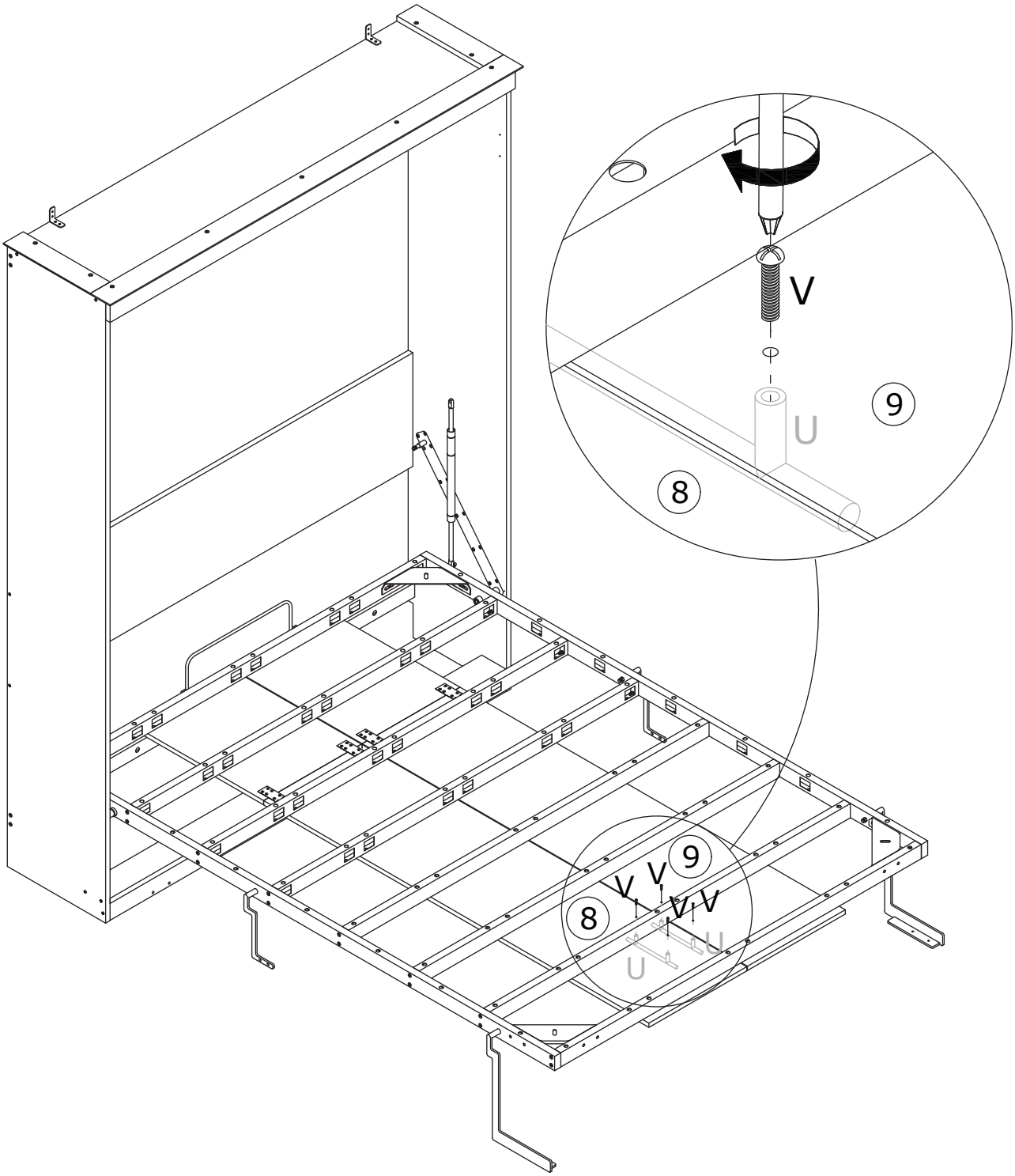

32

After straightening the bed frame, push it toward the wall at an appropriate angle.

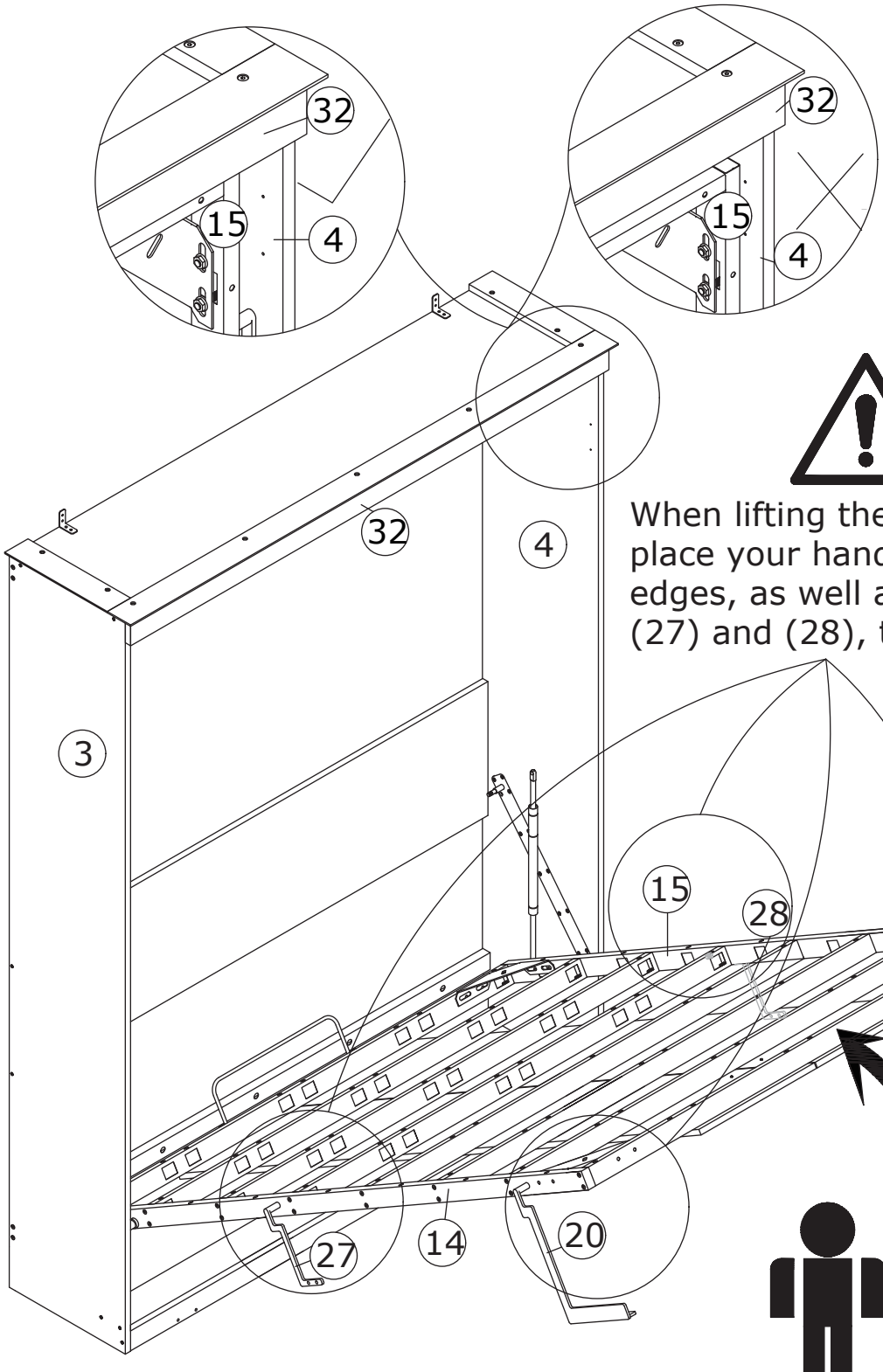

When lifting the bed frame, do not place your hands on the frame edges, as well as Parts (19),(20), (27) and (28), to avoid pinching .

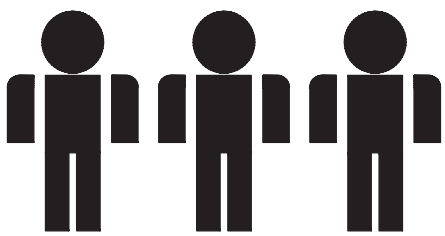

3 OF ADULTS

33

T x 2	AF x 1 M8	

Install part (R) to part (13) with nuts (T).

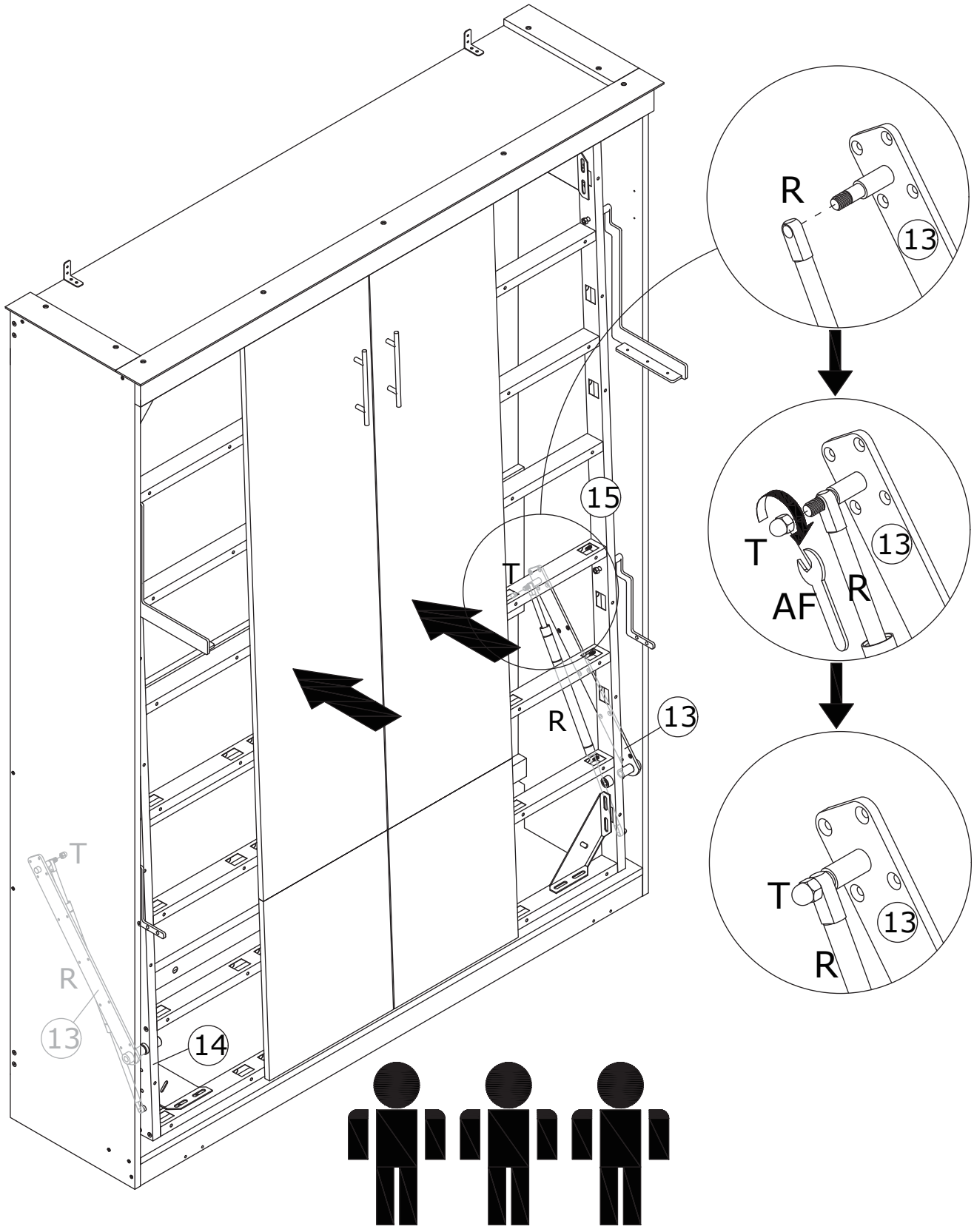

3 OF ADULTS

34

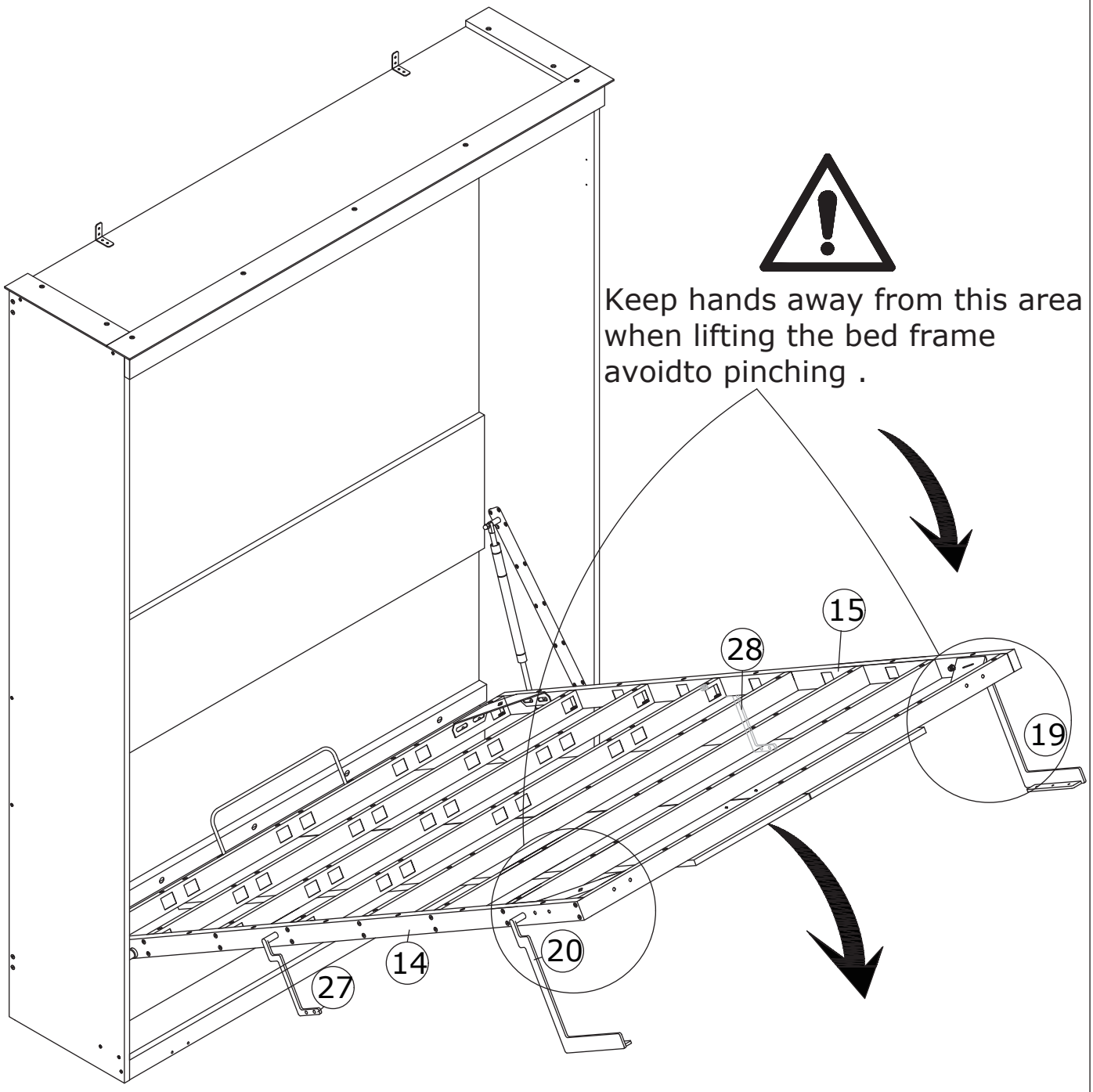

2 OF ADULTS

Turn the bed frame downward to lower it.

35

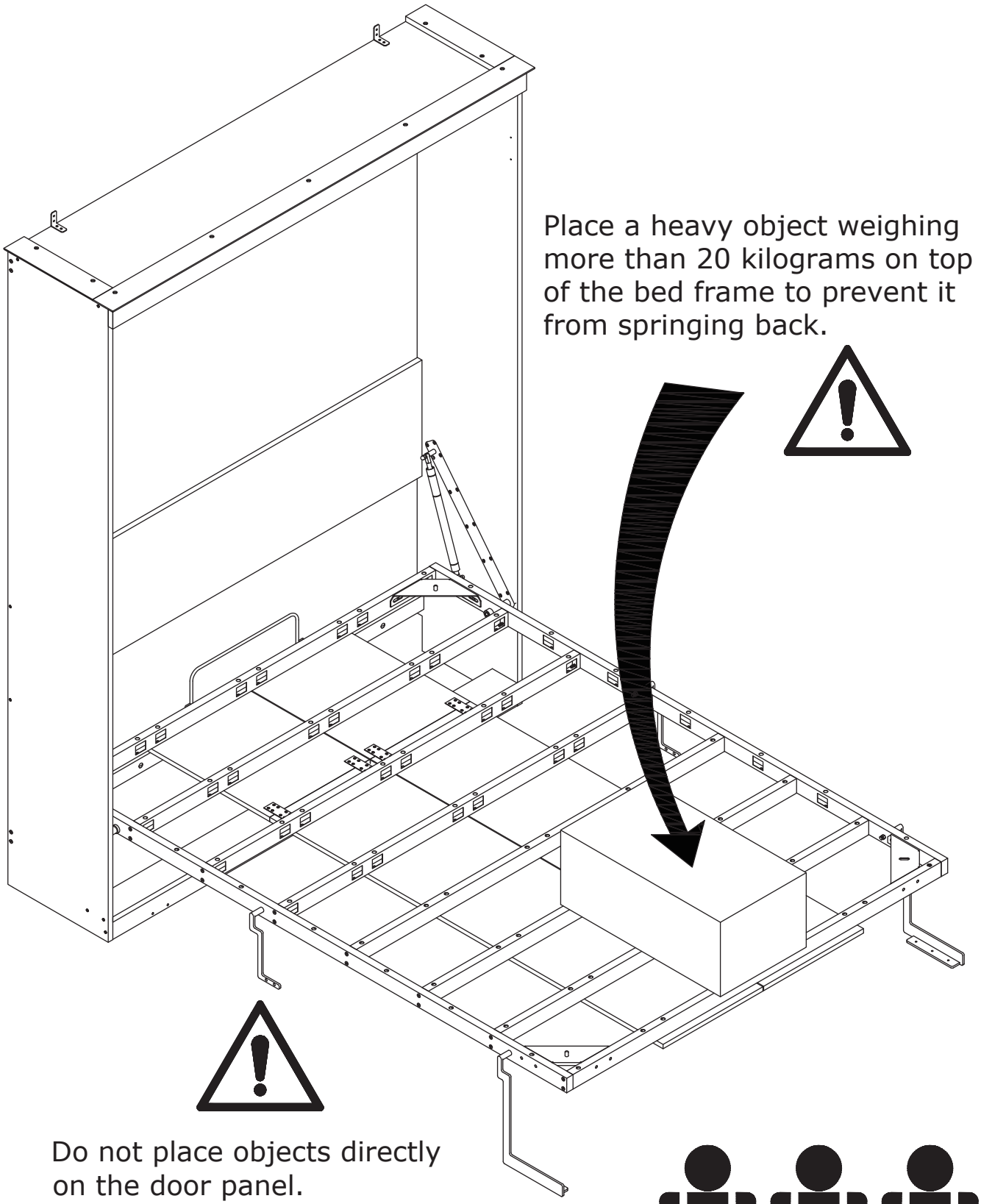

Place a heavy object weighing more than 20 kilograms on top of the bed frame to prevent it from springing back.

Do not place objects directly on the door panel.

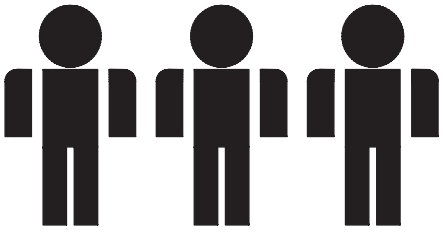

3 OF ADULTS

36

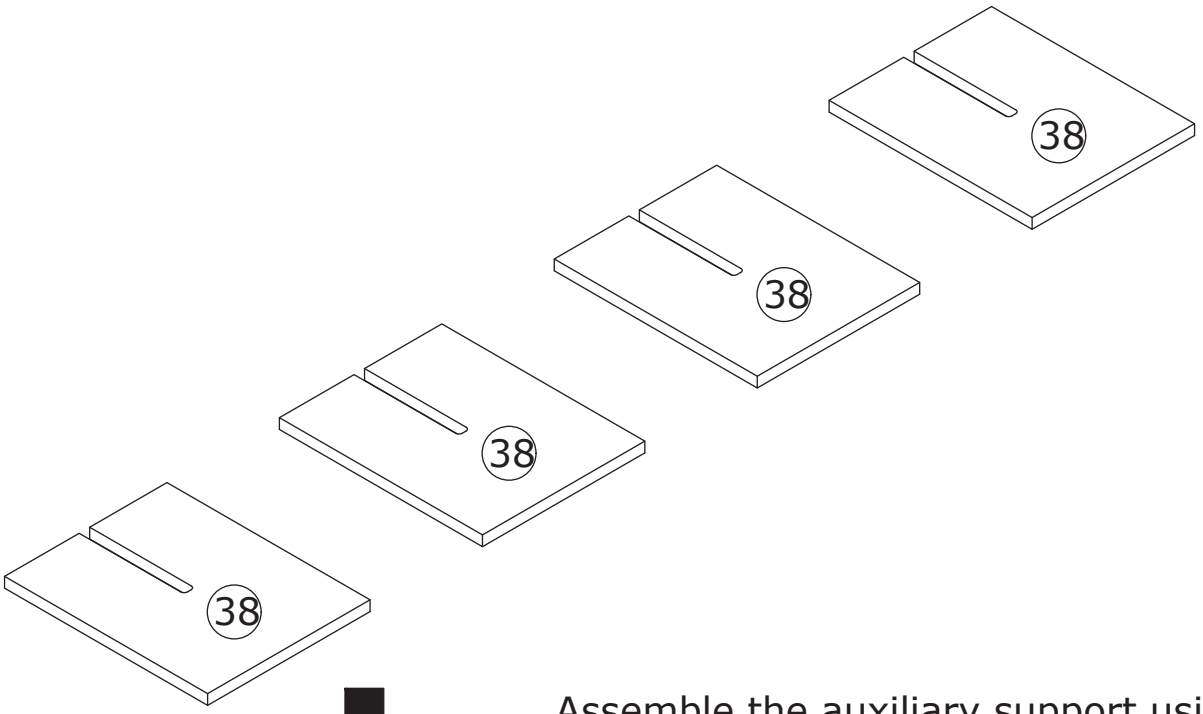

Assemble the auxiliary support using Panel 38.

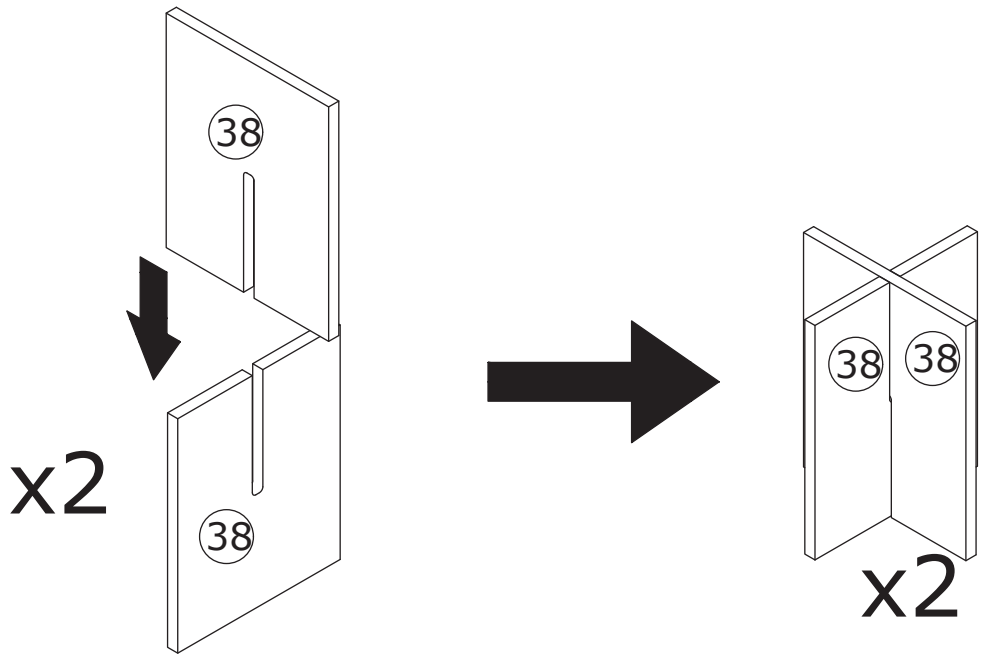

Panel 38 is only used as an auxiliary plate, does not participate in cabinet assembly, and can be disposed of as you wish after use.

37

E x 4	W x 2	
CRD3514A	W-2	

E	AB	AH
CRD3514A	CRD0416A	CRD3516A

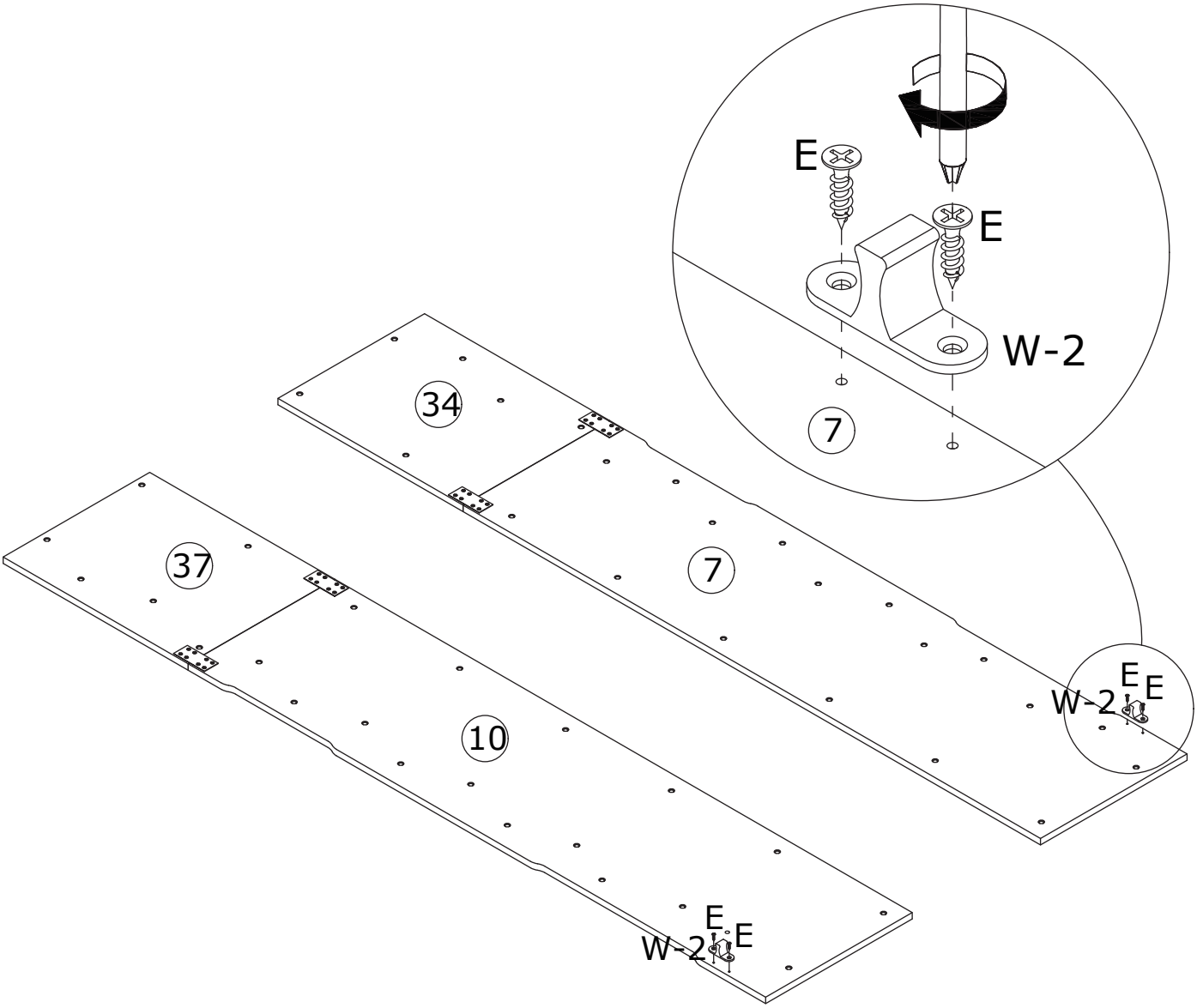

Secure part (W-2) to Panels 7 and 10 with screws (E).

38

G x 23	AC x 1	
	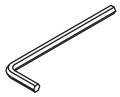	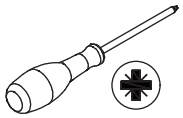
CRG0612A	M4	

Secure Panels 7 and 34 to parts (16), (17), and (18) with screws (G).
Use the assembled assist Panel 38 as support. When positioning assist Panel 38, find a suitable support point.



Auxiliary Panel 38 serves to support Panels 7 and 34.

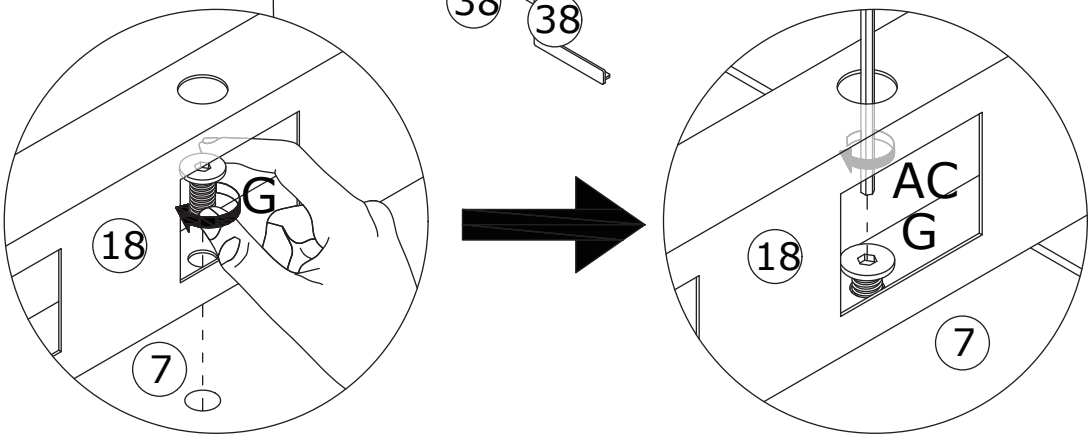

39

G x 23	AC x 1	
	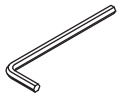	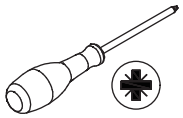
CRG0612A	M4	

Secure Panels 10 and 37 to parts (16), (17), and (18) with screws (G).
Use the assembled assist Panel 38 as support. When positioning assist Panel 38, find a suitable support point.



Auxiliary Panel 38 serves to support Panels 10 and 37.

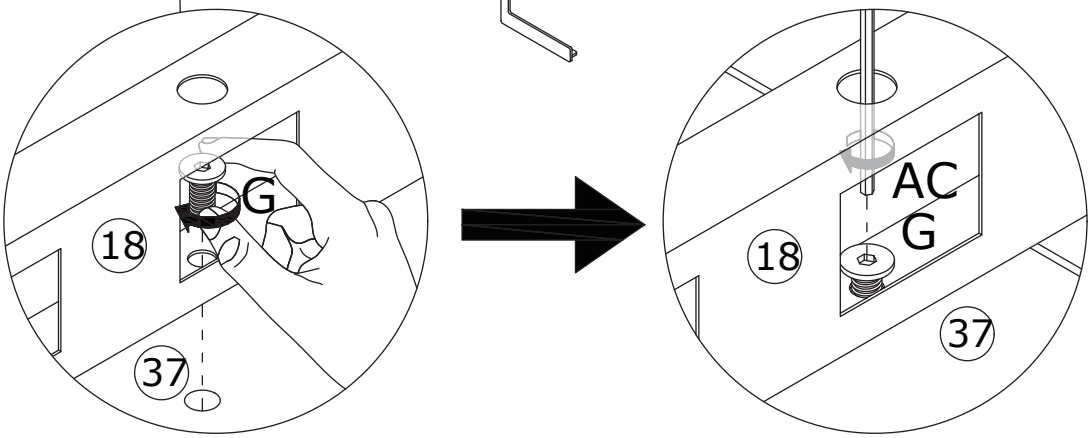

40

E x 4	W x 2	
 CRD3514A	 W-1	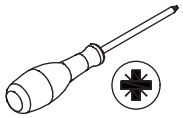

	E	AB	AH
	 CRD3514A	 CRD0416A	 CRD3516A

Secure part (W-1) to Panels 3 and 4 with screws (E).

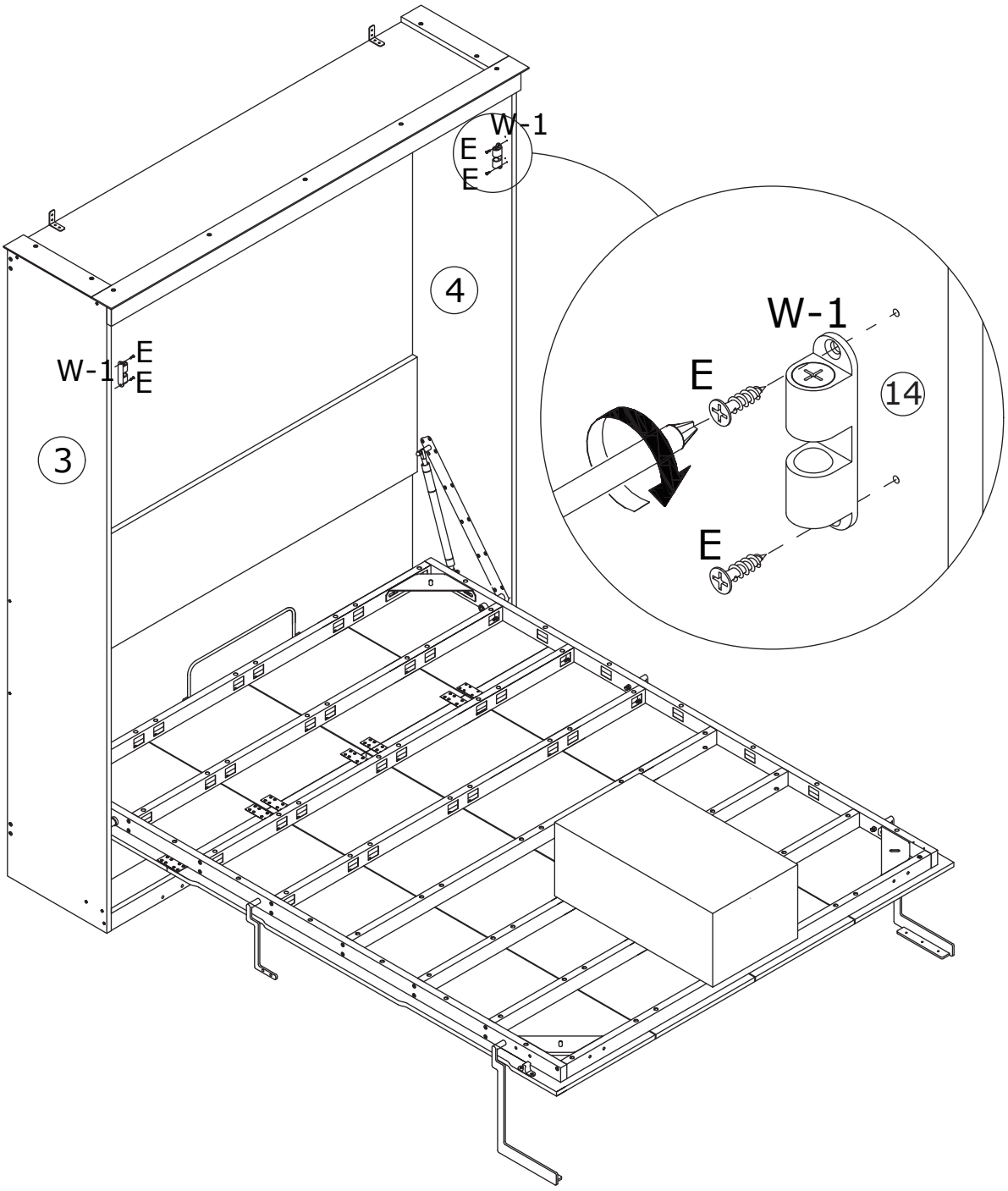

41

After straightening the bed frame, push it toward the wall at an appropriate angle.

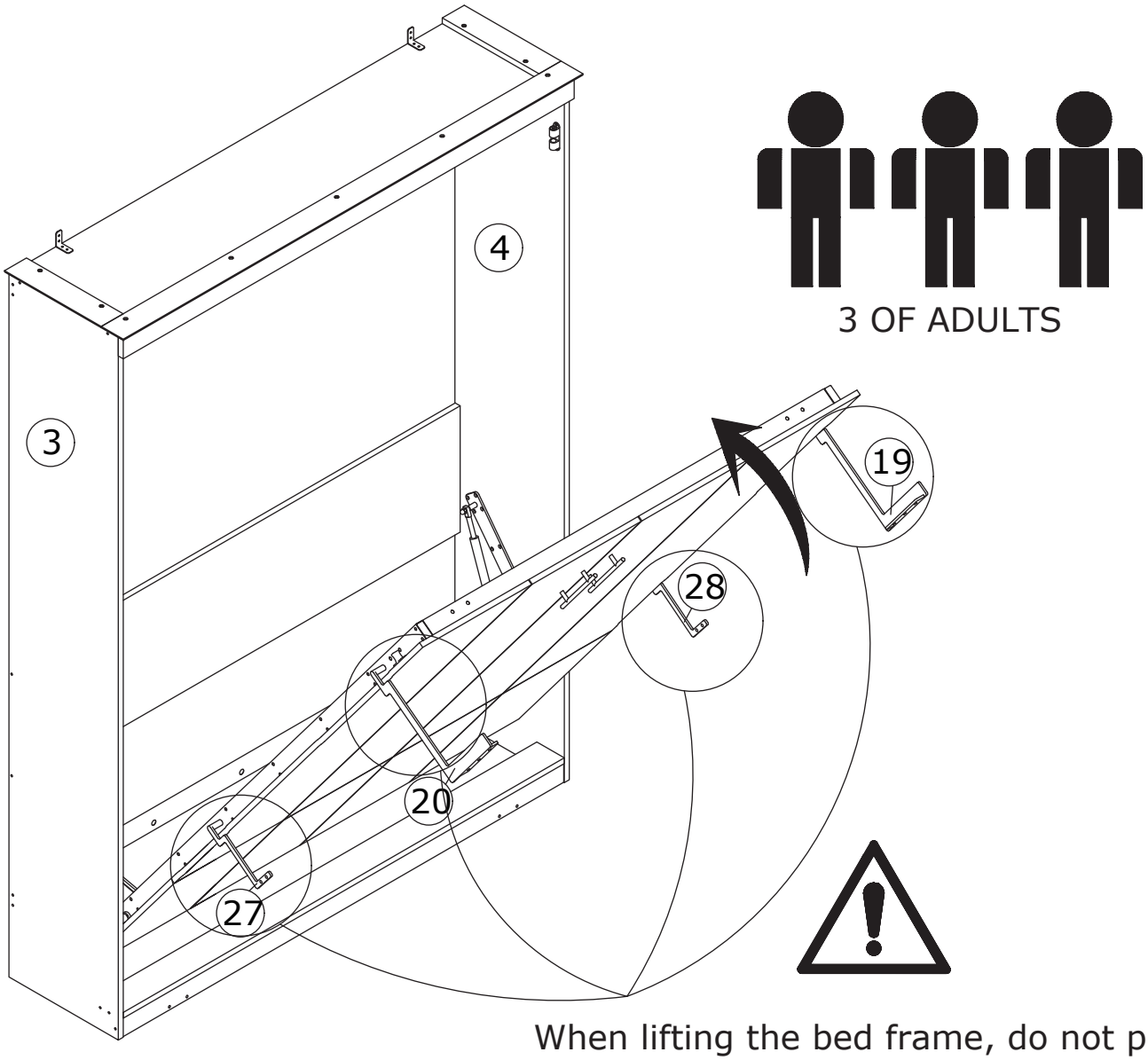

3 OF ADULTS

When lifting the bed frame, do not place your hands on the frame edges, as well as parts (19), (20), (27) and (28), to avoid pinching

42

AH x 6



CRD3516A

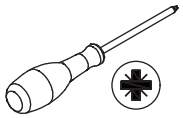



E



CRD3514A

AB



CRD0416A

AH



CRD3516A

Secure parts (19) and (20) to Panel 30 with screws (AH).

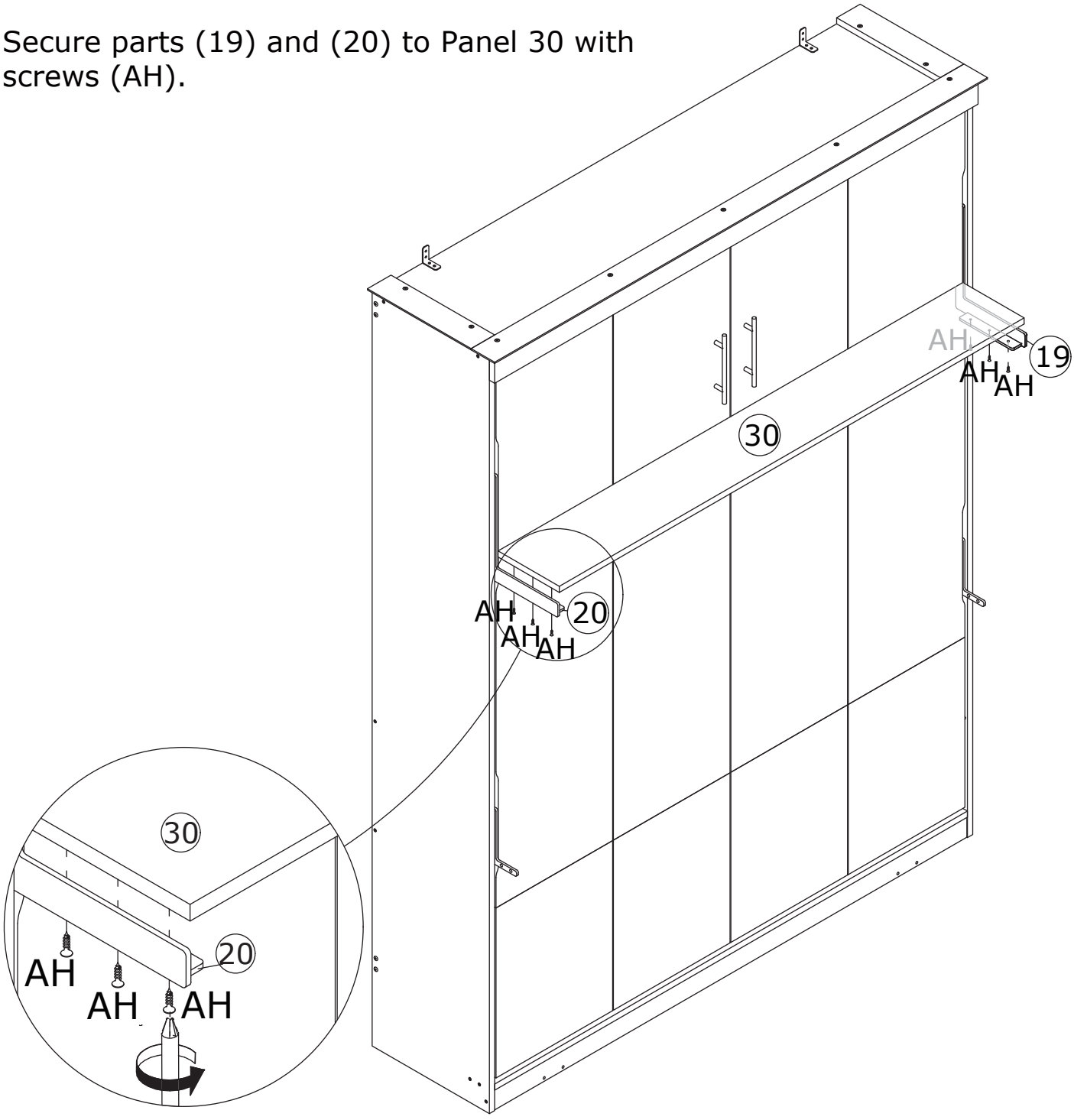

43

Z x 4



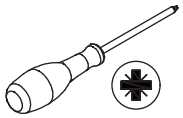

As shown in the figure, install the anti-slip footpad (Z).

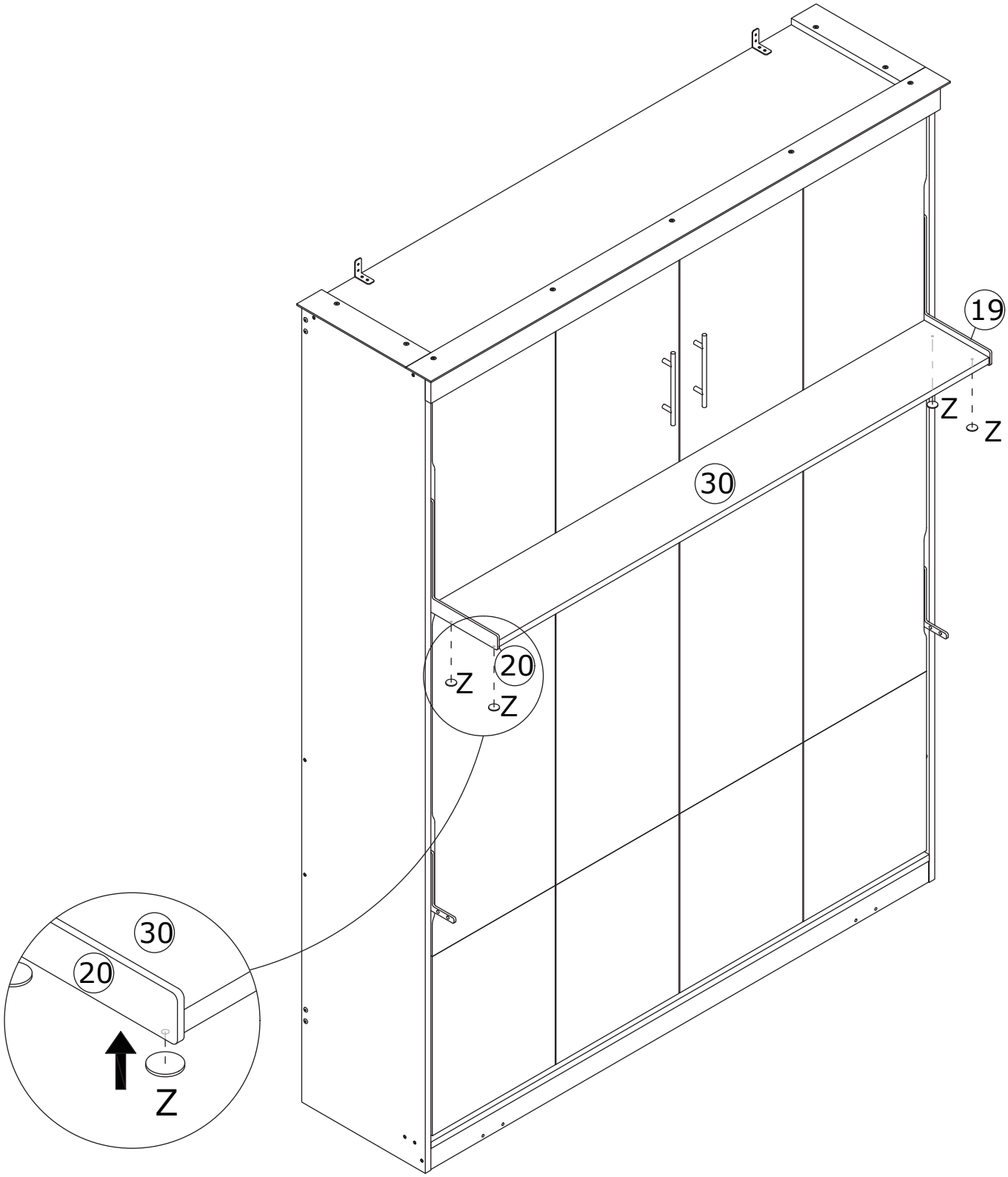

44



Secure parts (24), (25), and (26) with fittings (AA).

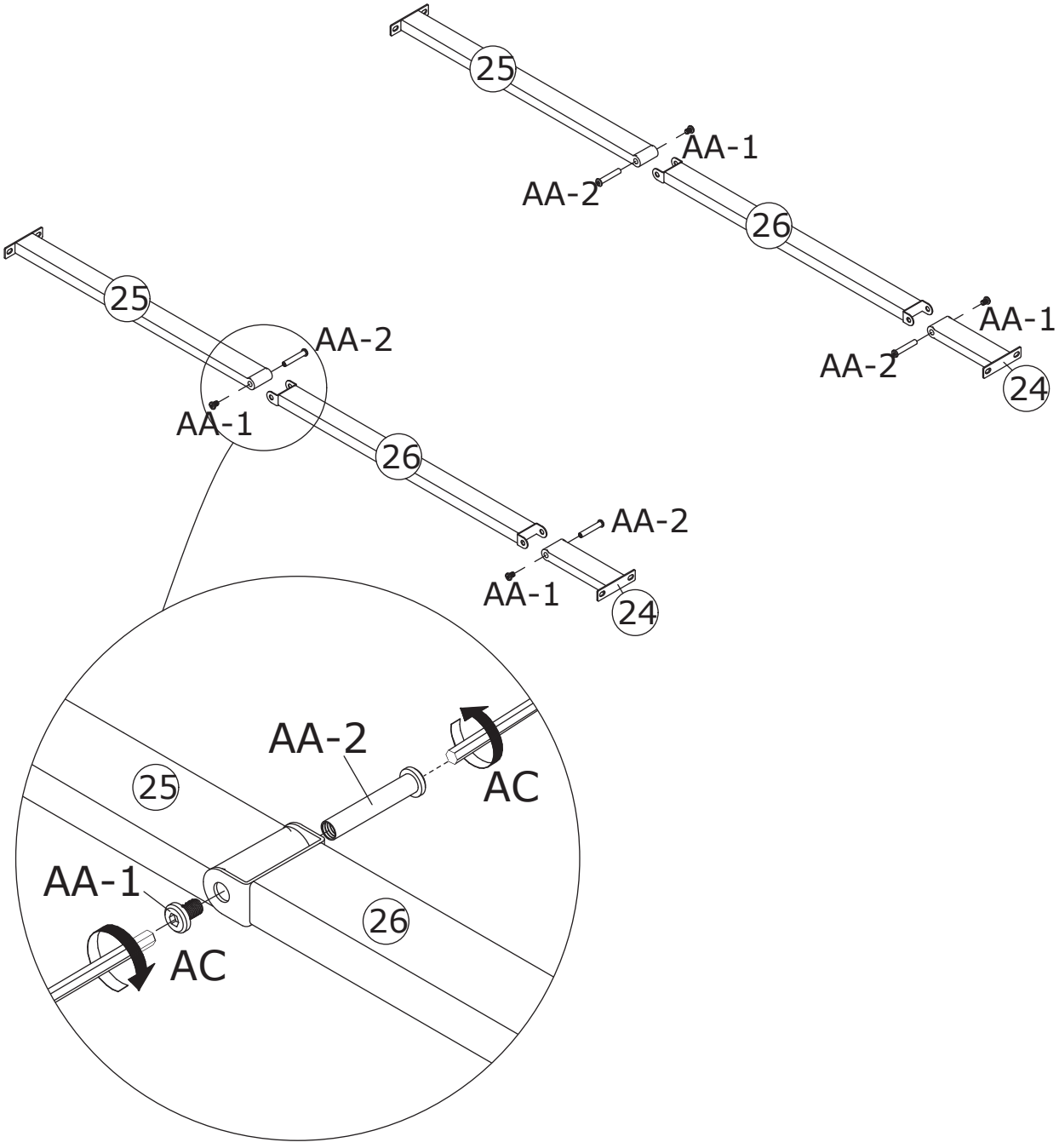

45

AL x 4	AC x 1	
 CRG0620A	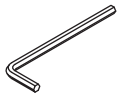 M4	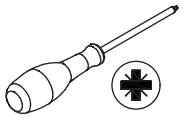

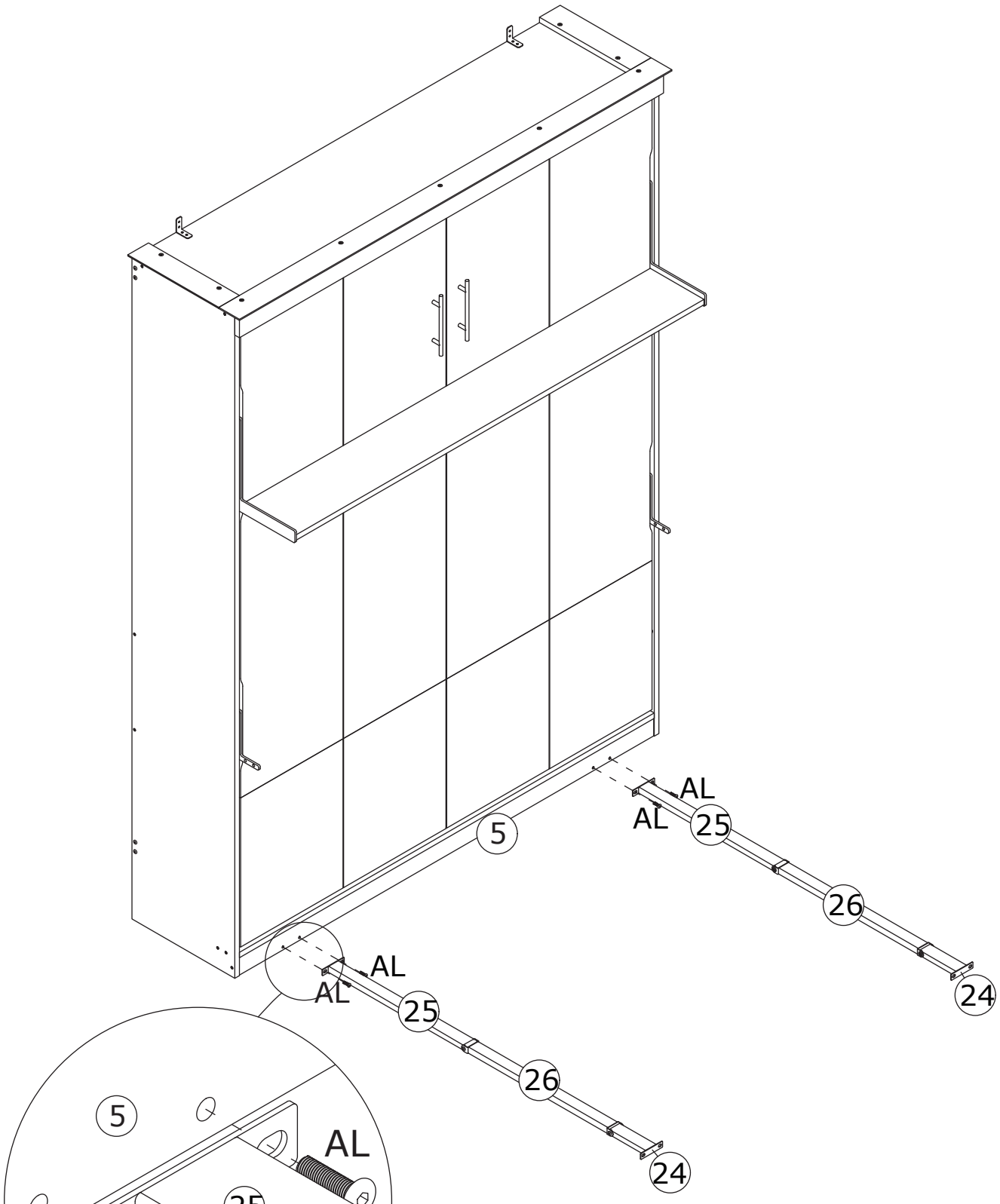

Secure part (25) to Panel 5 with screws (AL).

46

AL x 4	AC x 1	
 CRG0620A	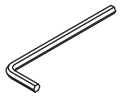 M4	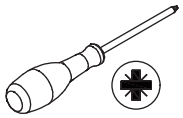

Secure part (21) to parts (27) and (28) with screws (AL).

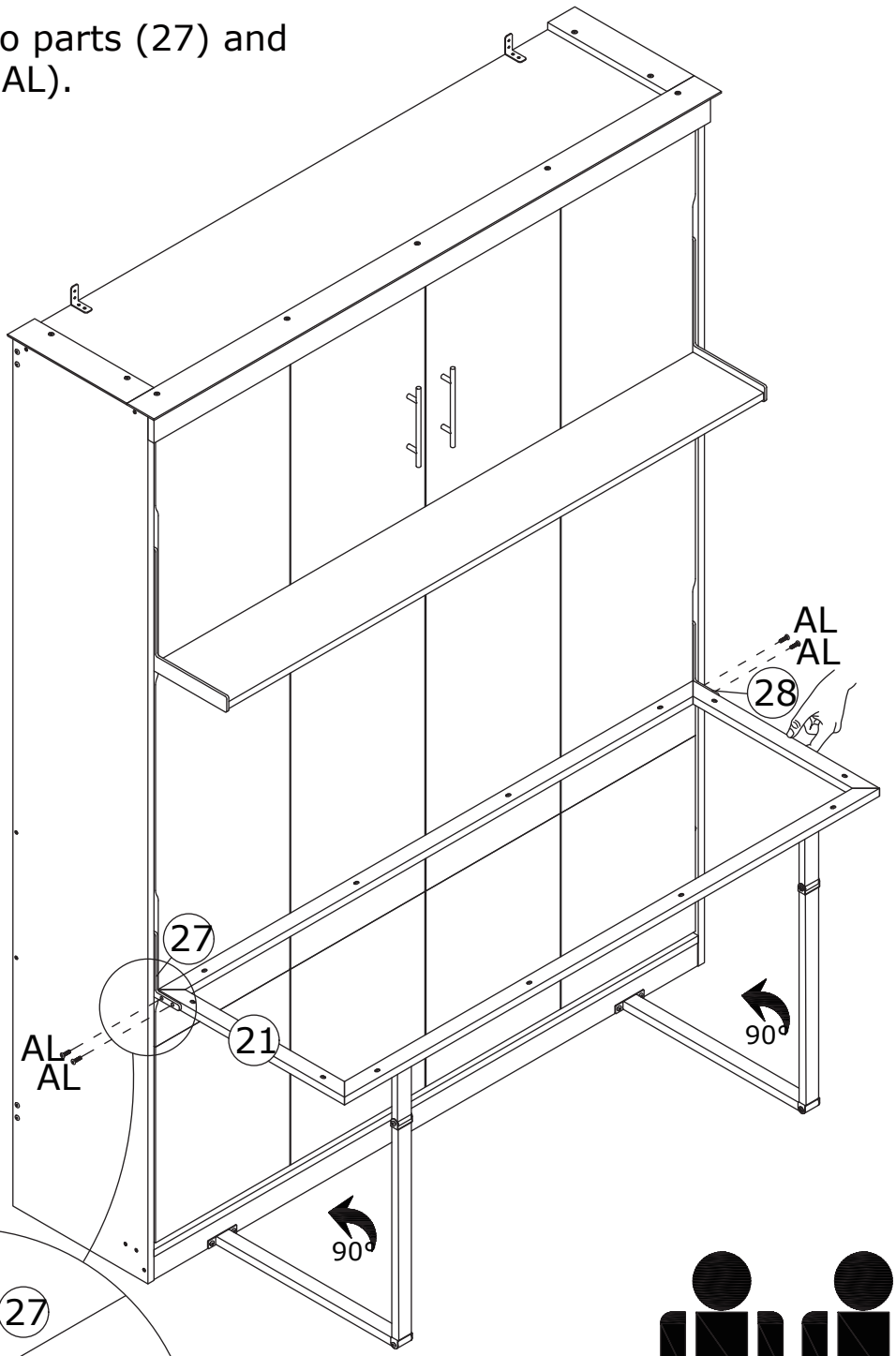

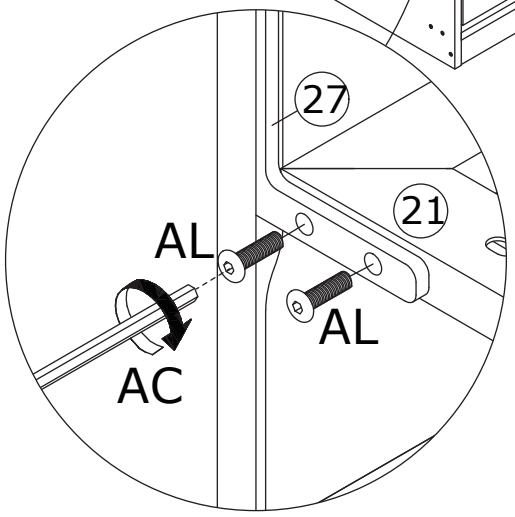

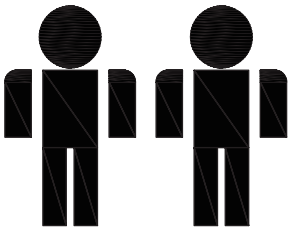

2 OF ADULTS

47

AK x 4	AC x 1	
CRG0616A	M4	

	L	AK
	CRG0616A	CRG0616A

Secure part (24) to part (21) with screws (AK).

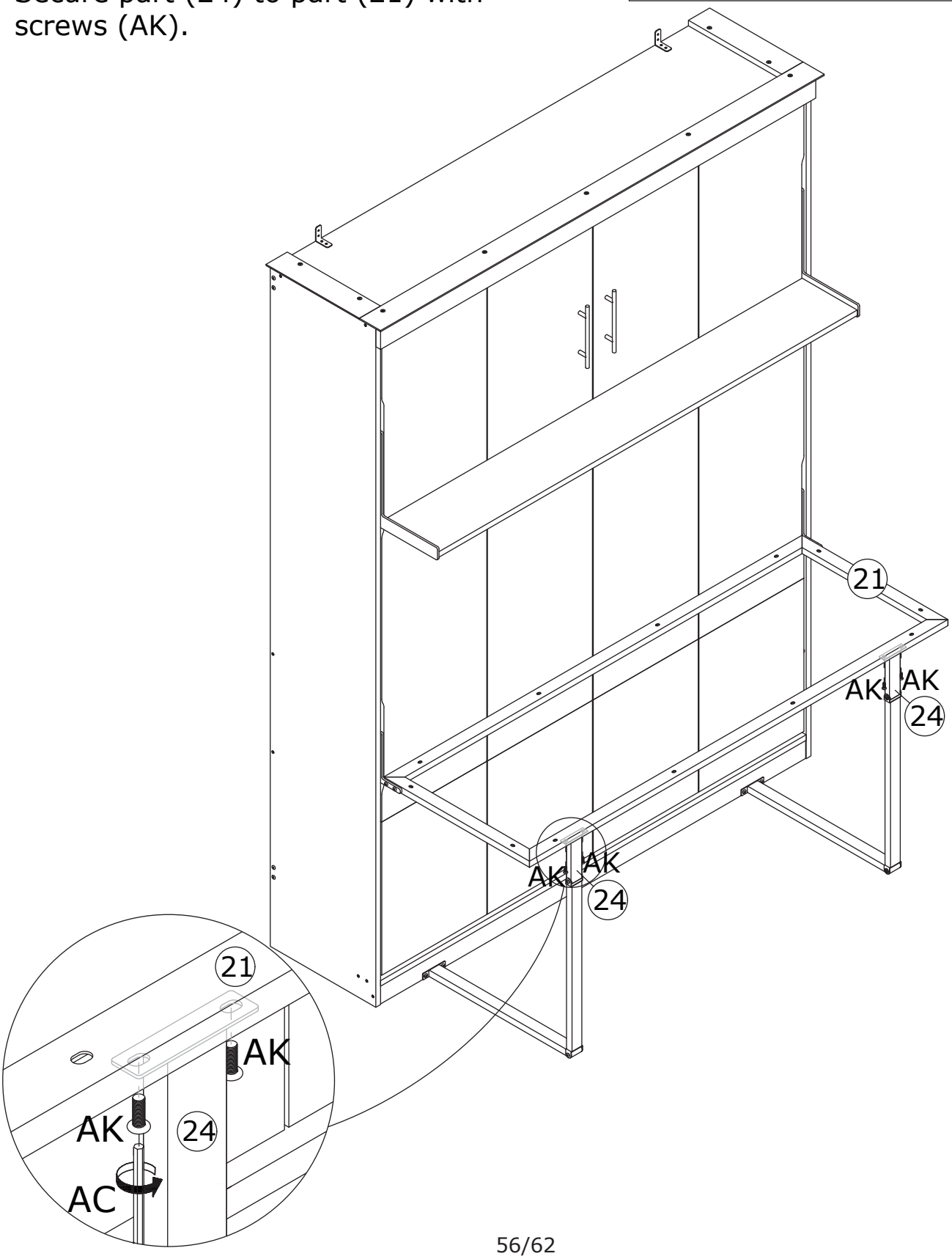

48

AM x 12	AC x 1	
	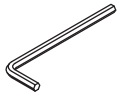	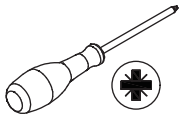
CRG0630A	M4	

Secure Panel 31 to part (21) with screws (AM).

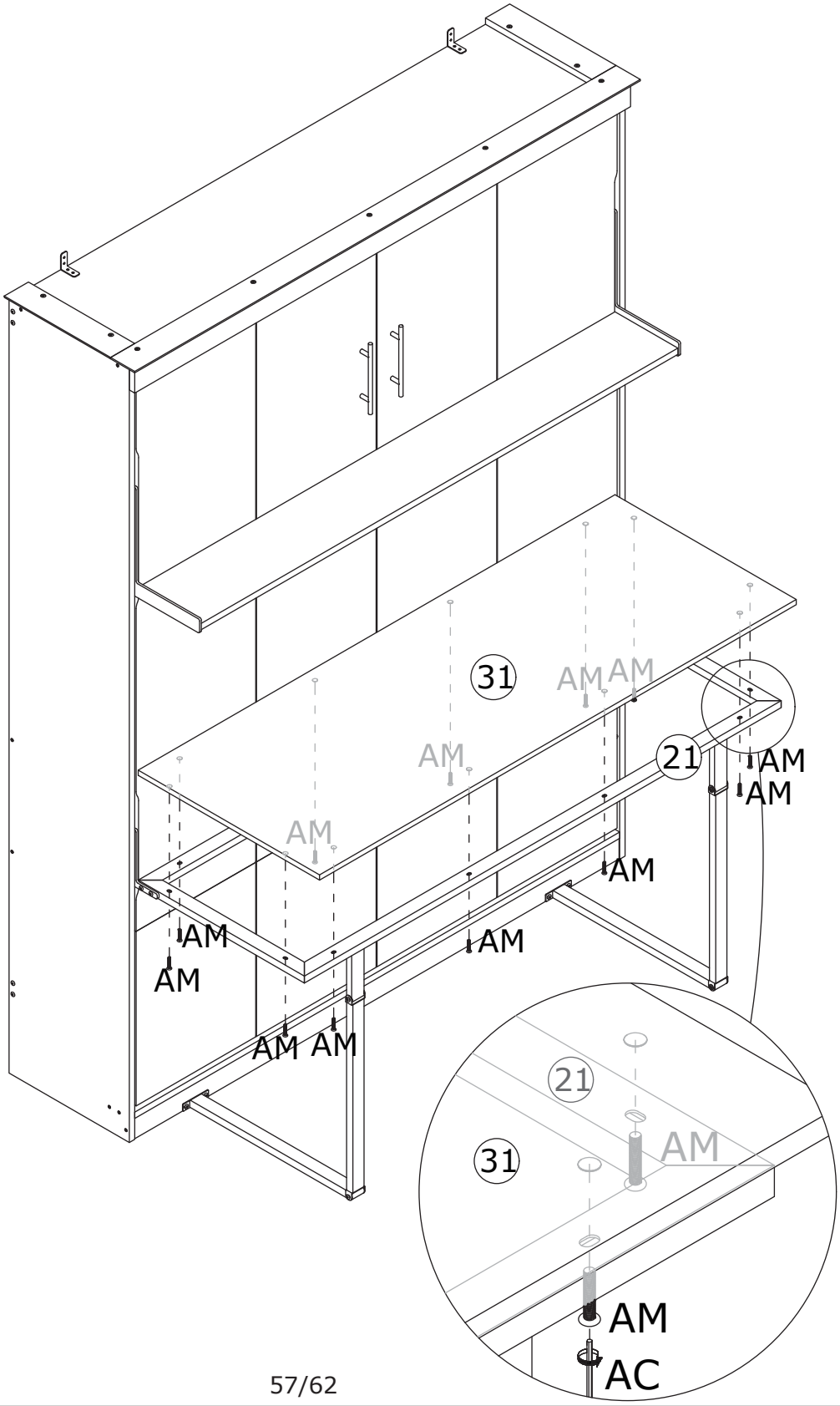

49

As shown in the figure, turn the bed frame downward to lower it.

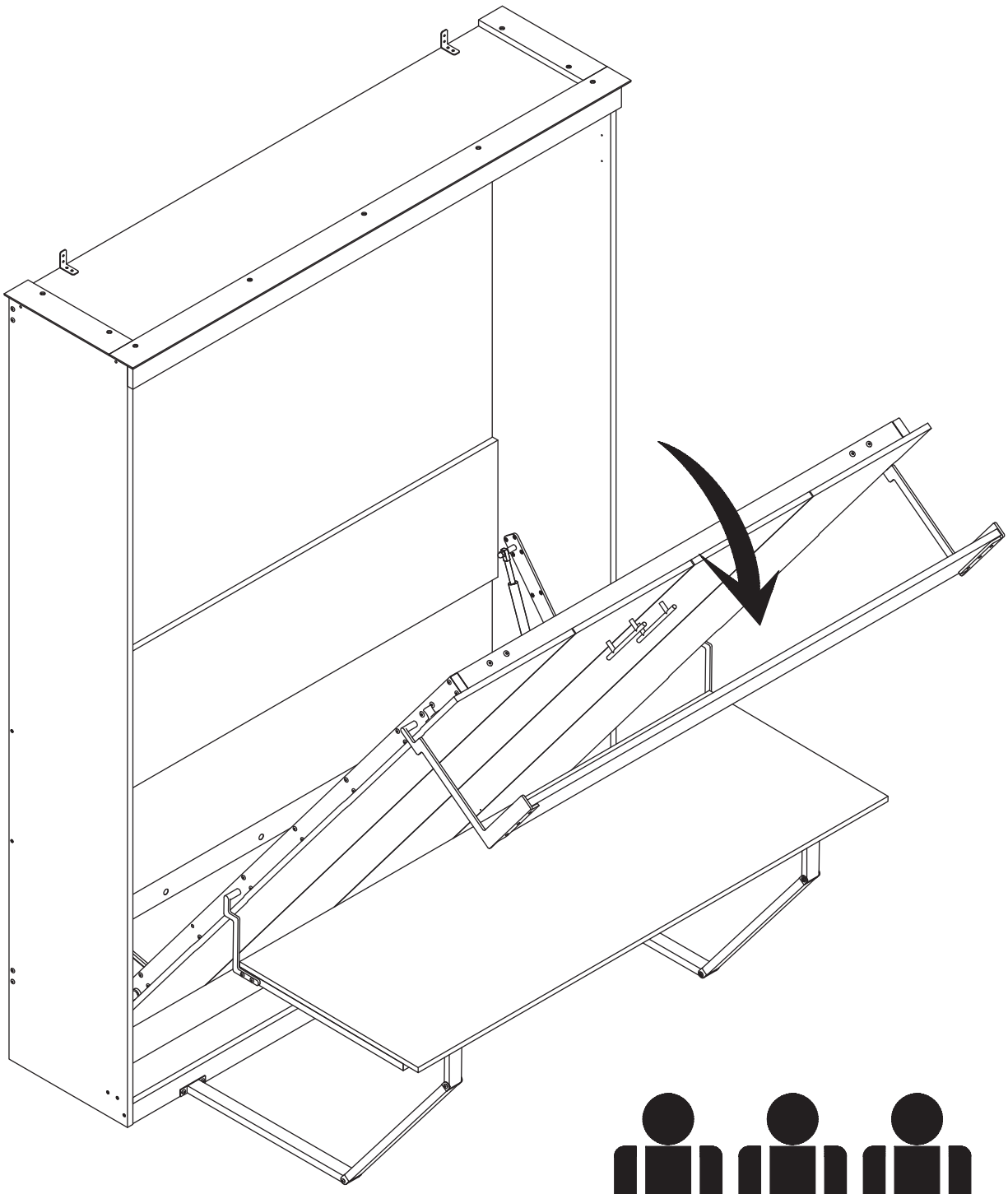

3 OF ADULTS

50

Y x 2

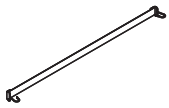

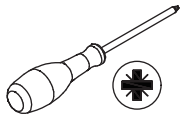

As shown in the figure, install the double-hook mattress strap (Y).

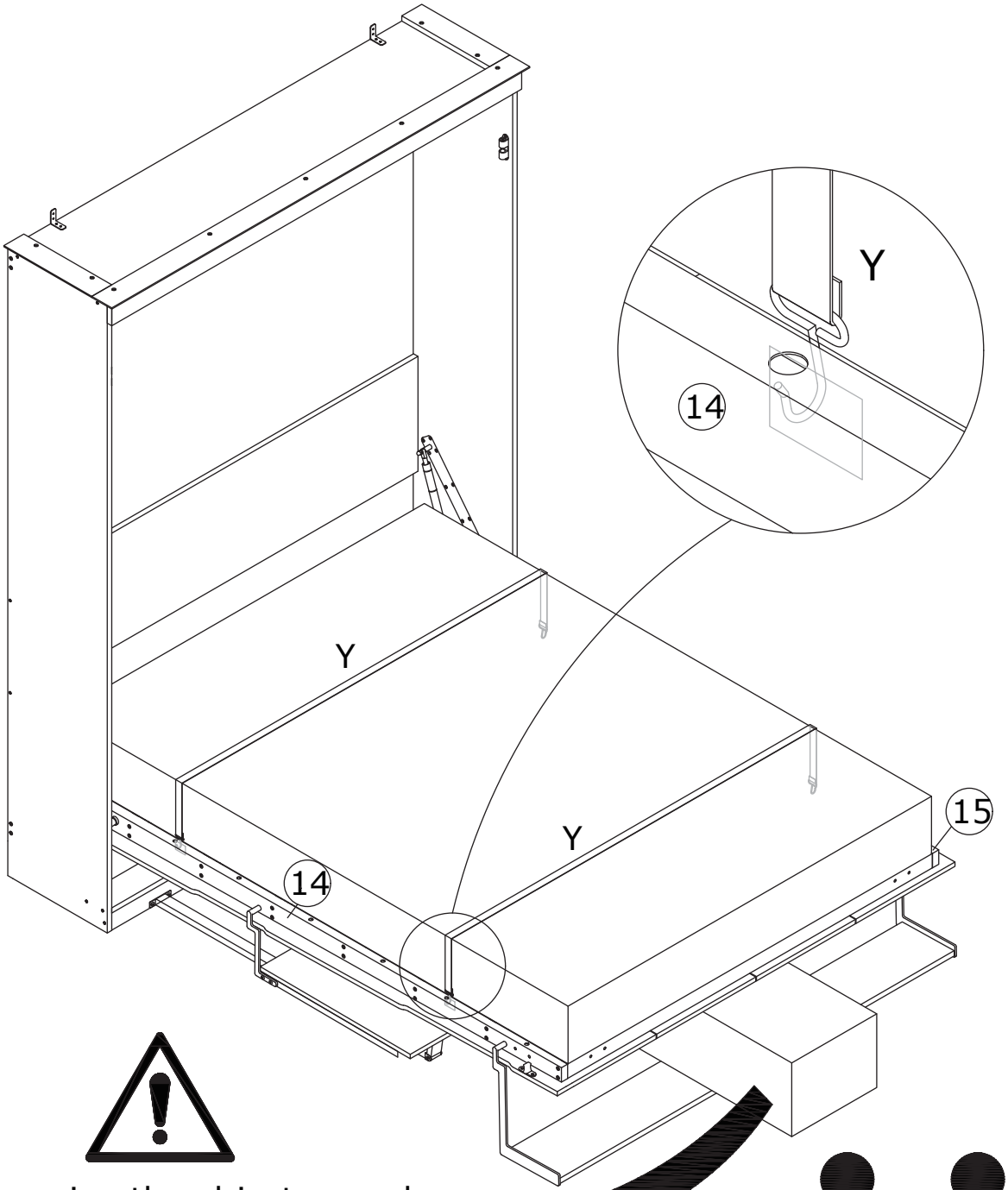

When moving the object, guard against the rebound of the bed frame.

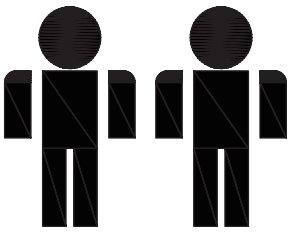

2 OF ADULTS

51

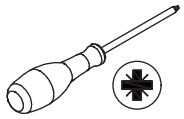

As shown in the figure, push the bed frame toward the wall.

When lifting the bed frame, do not place your hands on the frame edges, as well as parts (19), (20), (27) and (28), to avoid pinching.

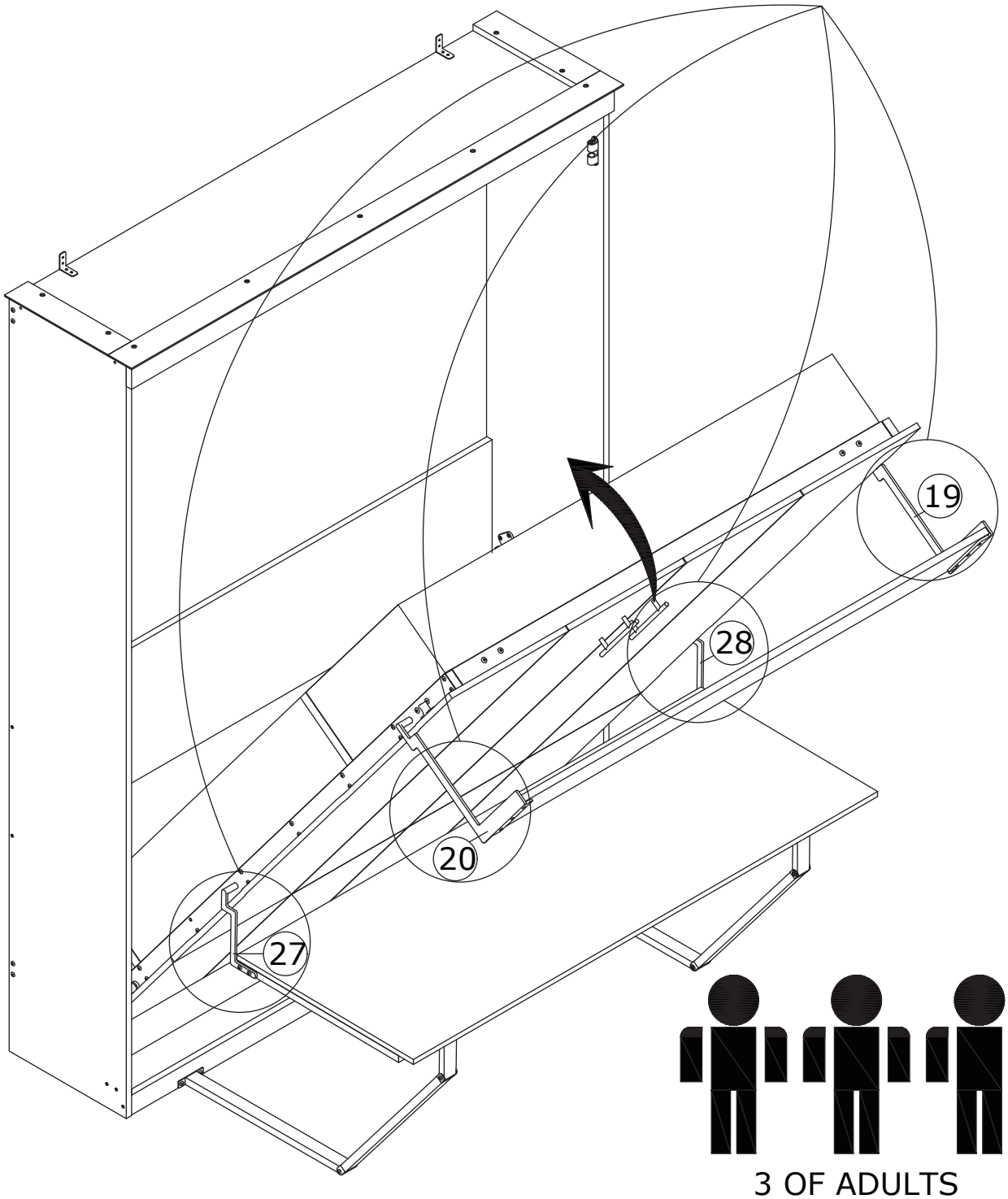

3 OF ADULTS

52

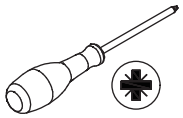

If the door panel fails to close tightly when being shut, you may pull the door panel open to a proper angle and adjust the component (W-1). Beware of pinching hands caused by door panel rebound.

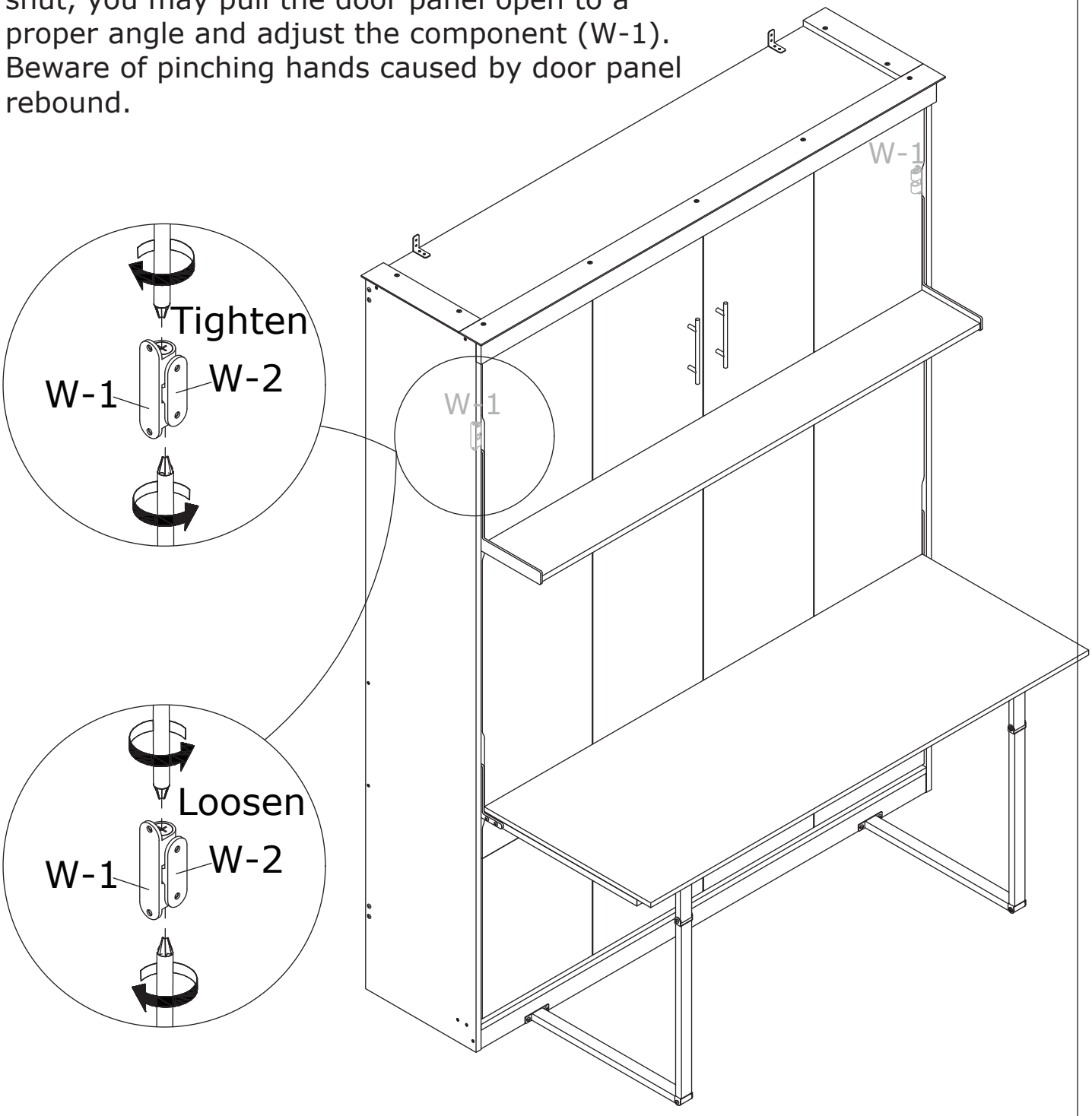

53

AC x 2	AD x 1	AE x 1	AF x 1	
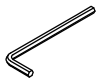 M4	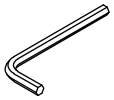 M12	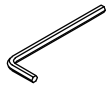 M5	 M8	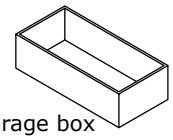 Storage box

After assembly is complete, please store this tool set properly for future disassembly and maintenance. (Also keep the 4 auxiliary plates 38.)

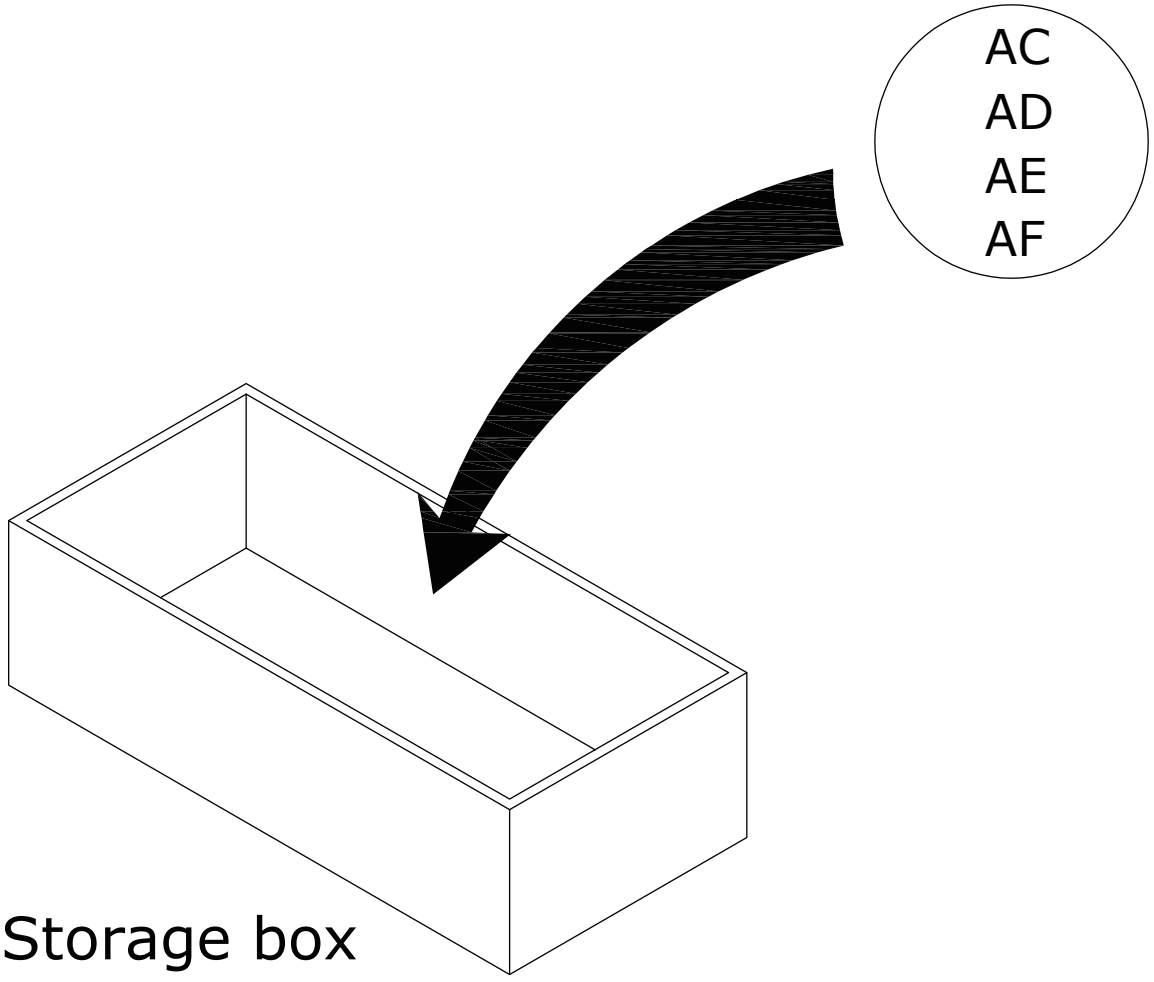



After assembly, keep these tools for future disassembly and maintenance

WARRANTY

WARRANTY CLAIMS

- There is a 30-day warranty for broken furniture or any other problems that do not work properly. The warranty will start from the date of purchase which must be verified by proof of purchase.

- Before making a claim, we may be able to answer your query, simply call us. Please leave your purchase order number, along with some details of the problem, if you want a replacement part. We will arrange within 48 hours. If there is out of stock, we will reply with a shipping date.

- The product must be used in accordance with the instructions provided. For health reasons.

- For other reasons, if the furniture needs to be returned, it must be cleaned and dried and operated within 30 days of receipt.

Type of Warranty Claim

- Failure to follow the furniture instructions will invalidate the warranty. Attention please.

- Does not include damage during installation, but includes damage during transportation.

Scope of responsibility

- Shall not bear any responsibility for misuse or user damage and / or loss of parts during the installation of furniture.

- After using, the damage and scratches of the furniture are not covered by the warranty.

The Warranty Relates to All Bought in The Us and Covers The Following Areas

- Sheet parts: 1 month from the date of purchase.

- Electrical parts: 1 month from the date of purchase.

RETURNS

CHANGED YOUR MIND AND NEED TO RETURN YOU ITEM?

PLEASE FOLLOW THE BELOW INSTRUCTIONS:

- If you have purchased and have simply changed your mind, follow the retailer's instructions for returns.

DEFECTIVE ITEMS

- If your item is defective in any way, i.e. it doesn't work but you can't identify why, in the first instance, please call us.

DAMAGED ITEMS

- If you receive an order with obvious shipping damage from the retailer, then we suggest the delivery is refused. If the delivery has been accepted and then shipping damage is found, please follow the specific instructions advised by the retailer.
  In all circumstances please save all packaging material and paperwork for the order. Please be aware that if you dispose of packaging material or attempt to return the merchandise without contacting the fulfiller, you jeopardise your chances of making a claim, and you may not receive a credit for the return.

AFTER-SALES CONTACT


adelahu@fufugaga.com


208-820-0068