# ASSEMBLY INSTRUCTION

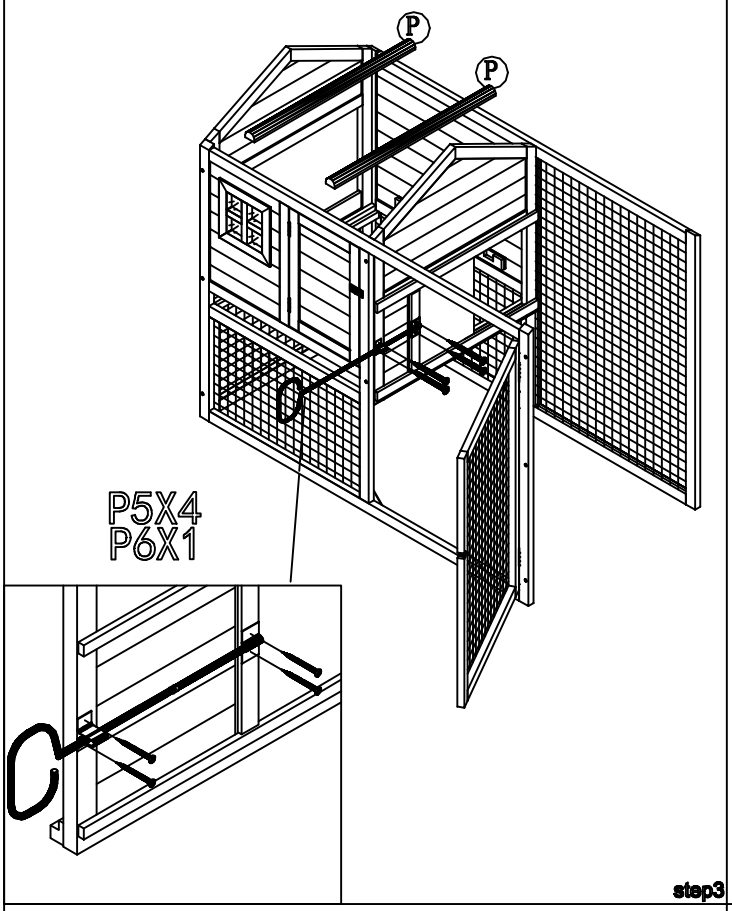


step3

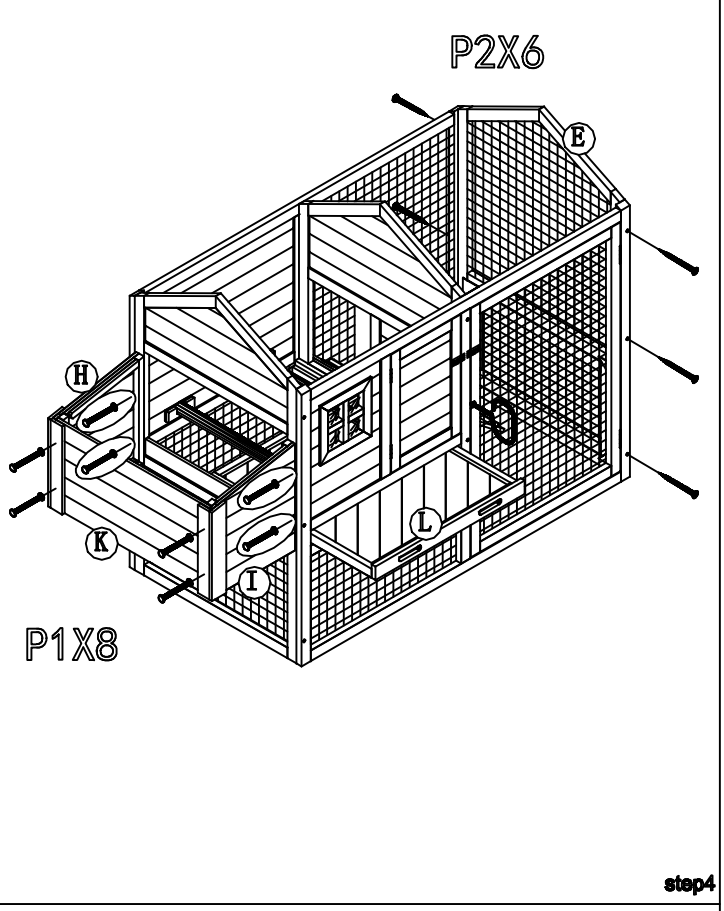


step4

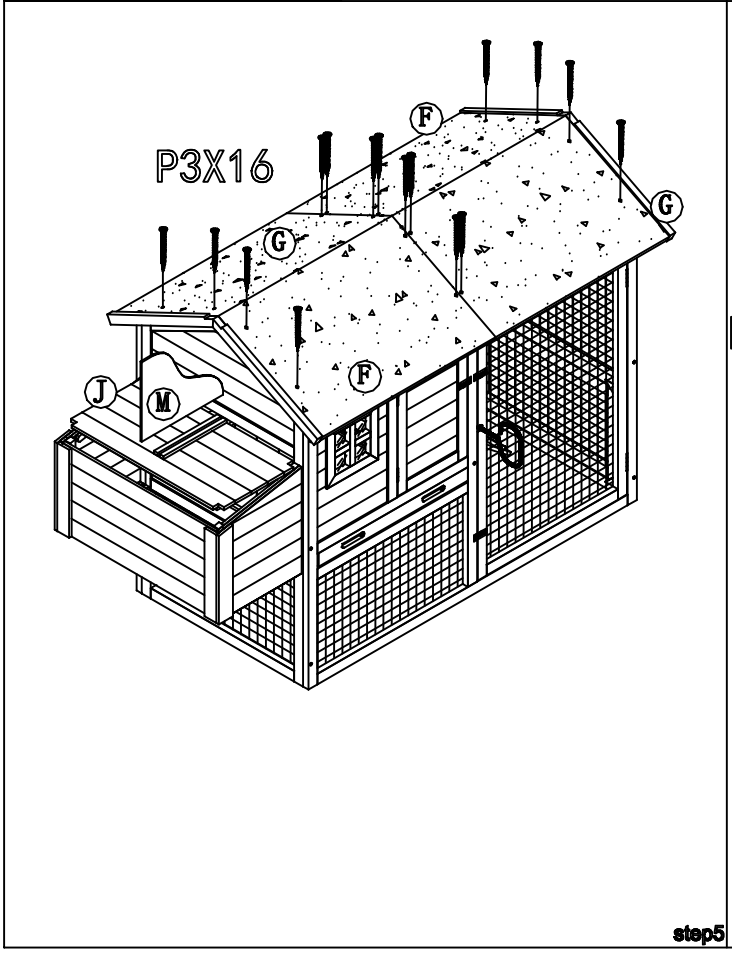


step5

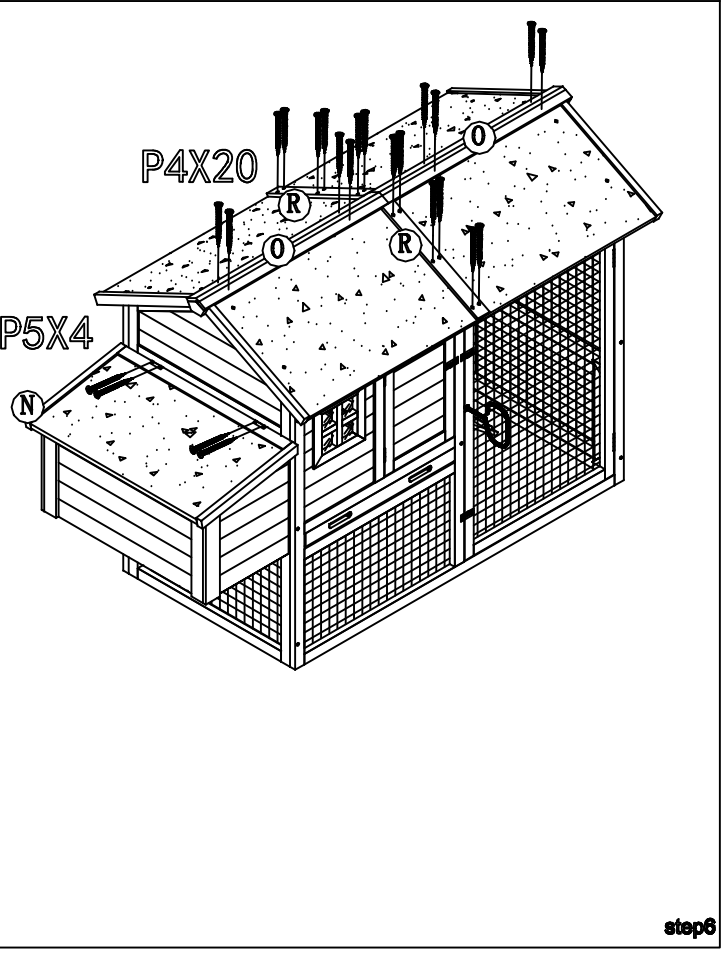


step6