azzuri
by Avanity

Installation Instructions
AG2503S-60CH/MB/BN

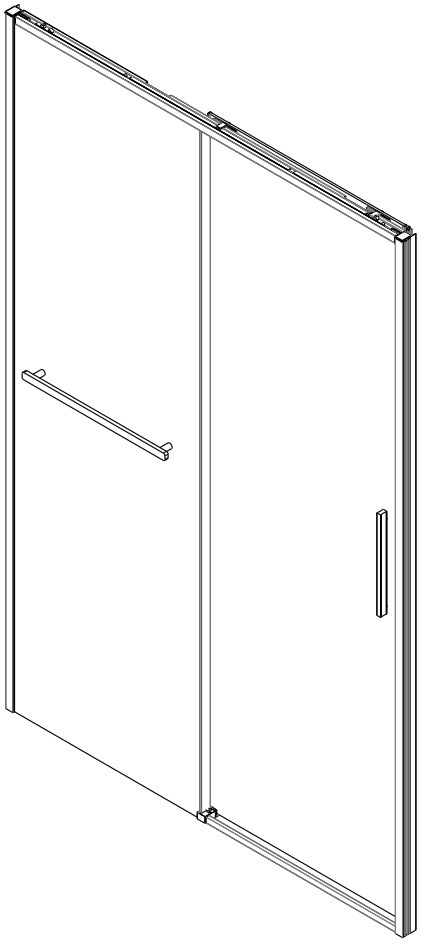

V1-2026-01-16

⚠ IMPORTANT SAFETY & INSTALLATION INFORMATION

GENERAL INFORMATION

- Please read all instructions fully before installation.
- This product should be installed by a qualified installer familiar with shower door construction and tempered glass handling.
- The installer is responsible for ensuring correct installation and compliance with all applicable local building and plumbing codes.
- Product specifications, designs, and instructions may be updated without prior notice.

ⓘ Note: All illustrations are for reference only and may not be drawn to scale.

INSTALLATION & HANDLING WARNINGS

- This product contains heavy glass components. Do not attempt to lift or install glass panels alone.
- Always use an assistant and professional-grade glass suction cups when handling glass.
- Do not lean on, apply pressure to, or misuse the glass panels or door.
- Some installations may require drilling into the threshold or base—confirm drilling suitability with the base or flooring manufacturer before proceeding.

TEMPERED GLASS SAFETY WARNING

⚠ **Tempered glass can shatter without warning if damaged, improperly installed, or misused.**

DO NOT:

- ✗ Install glass with chipped corners, cracked edges, or visible damage
- ✗ Install glass that has been dropped or struck against a hard surface
- ✗ Attempt to cut, drill, or modify tempered glass
- ✗ Slam, force, or aggressively operate the door

ALWAYS:

- ✓ Protect glass edges and corners during storage, unpacking, and installation
- ✓ Keep corner protectors in place until final installation
- ✓ Ensure all hardware is properly aligned, tightened, and gasketed
- ✓ Inspect glass and hardware periodically for damage or loosening

⚠ Even minor edge damage can cause glass to shatter immediately or hours or days later.

For customer support, please call Avanity Corporation at 866-522-5578 weekdays 9:00 to 5:00 PST
Pour le support client, s'il vous plaît appelez au 866-522-5578 Avanity Corporation semaine 9:00-5:00 PST

INSTALLER RESPONSIBILITY NOTICE

- Improper installation, loose hardware, or misalignment may place stress on the glass and cause failure.
- Adjustments should be made immediately if misalignment or loose components are detected.
- Extra caution is advised in households with children or elderly users;additional safety measures should be considered.

PRE-INSTALLATION CHECKLIST

Before beginning installation, confirm the following:

- ✓ All parts are present and undamaged
- ✓ Walls are plumb, square, and structurally sound
- ✓ Threshold is level and capable of supporting the product
- ✓ Finished surfaces are protected during installation
- ✓ Proper safety equipment is worn (gloves, safety glasses, footwear)

DISCLAIMER & LIABILITY NOTICE

- Manufacturer is not responsible for damage or injury resulting from improper installation, handling, misuse, or failure to follow instructions.
- Installation of damaged glass voids all warranties and may result in serious injury or property damage.
- This manual must be left with the end user upon completion of installation.

For customer support, please call Avanity Corporation at 866-522-5578 weekdays 9:00 to 5:00 PST
Pour le support client, s'il vous plaît appelez au 866-522-5578 Avanity Corporation semaine 9:00-5:00 PST

Tools

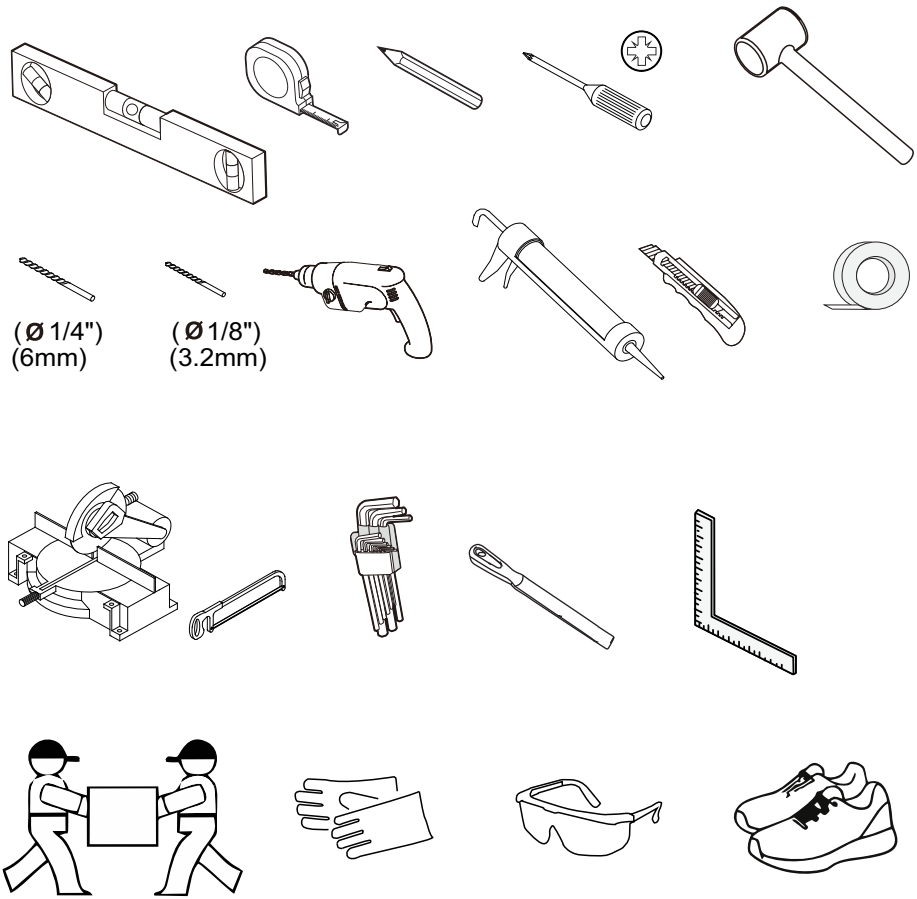

List

01 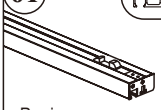 Runing rail x1	02 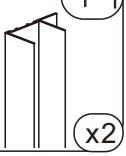 Wall jamb x2	03  Vertical profile for fixed panel x1	04 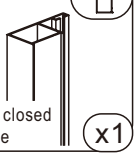 Door closed profile x1	05 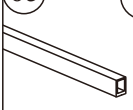 Threshold x1
06  U gasket x1	07  Decorative gasket x1	08 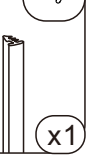 Wall jamb gasket x1	09A 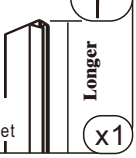 Mid gasket Longer x1	09B 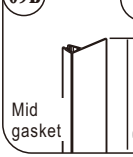 Mid gasket Shorter x1
10 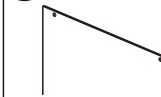 Door panel x1	11  Fixed panel x1	12  Roller x2	13A  Door hadle x1	13B  Towel bar x1
14A  Bottom guide A x1	14B  Bottom guide B x1	15  Bottom slider guide x1	16  Decorative cap x2	17A  Wall jamb cap /A x1
17B 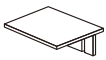 Wall jamb cap /B x1	18  Vertical profile cap x2	19  2mm Allen key x1	20  2. 5mm Allen key x1	21  lubricant x1

List

22

Decorative cap x12

23

ST4x8
Cross round head machine screw x6

24

M4x10
Round head screw x2

25
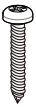
ST4x25
Cross round head machine screw x1

26
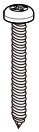
ST4x35
Cross round head machine screw x8

27

Wall plug x7

28

Auxiliary tools x1

For customer support, please call Avanity Corporation at 866-522-5578 weekdays 9:00 to 5:00 PST
Pour le support client, s'il vous plaît appelez au 866-522-5578 Avanity Corporation semaine 9:00-5:00 PST

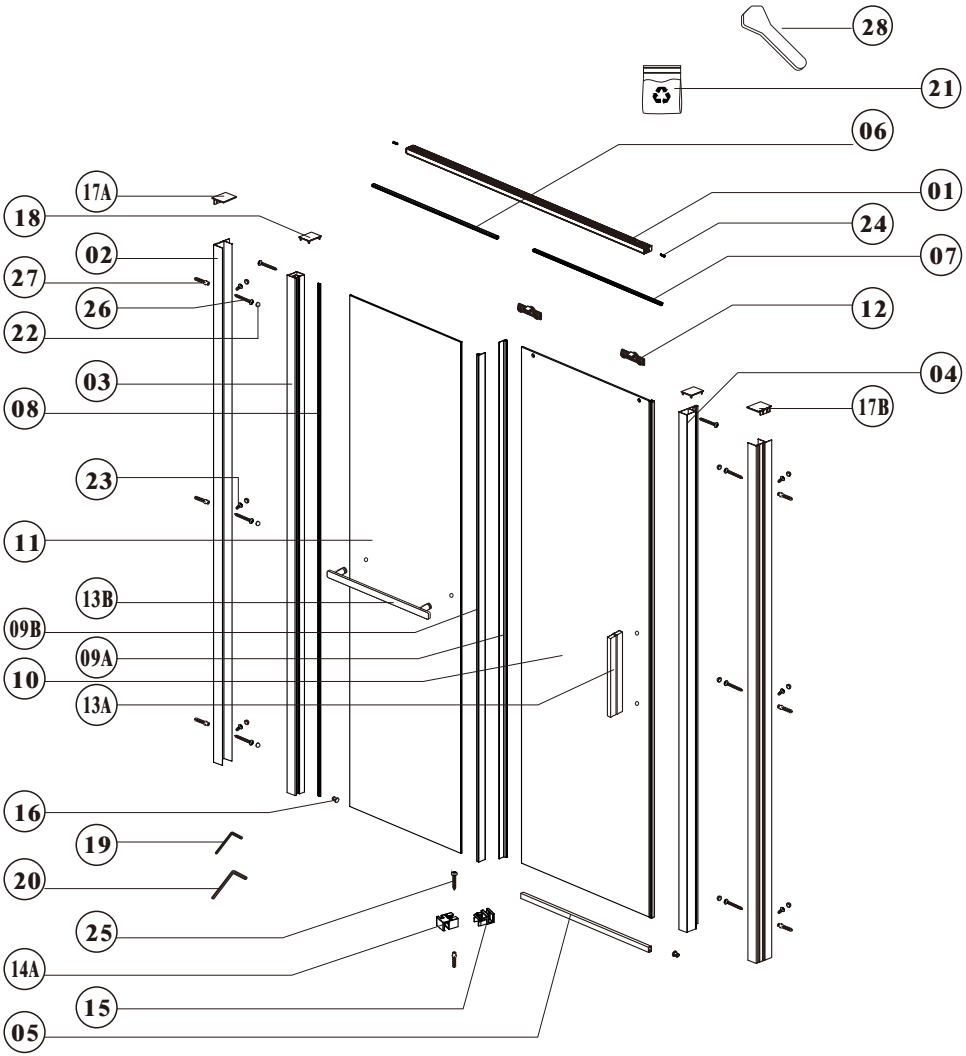
28
21
06
01
24
07
12
04
17B
17A
18
02
27
26
22
03
08
23
11
13B
09B
09A
10
13A
16
19
20
25
14A
15
05

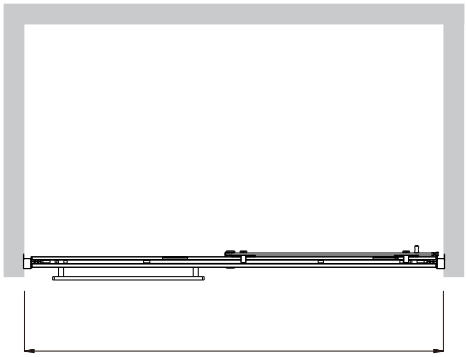

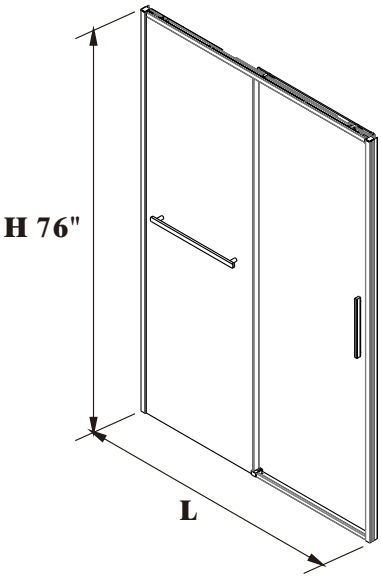

Code	Size	L (Min~Mix)	Colour	Glass
AG2503S-60CH	60"x76"	56"-60"	Chrome	1/4"-Easy-clean
AG2503S-60MB	60"x76"	56"-60"	Matt black	1/4"-Easy-clean
AG2503S-60BN	60"x76"	56"-60"	Brushed nickel	1/4"-Easy-clean

01 Measure the width of the shower door opening at the top, middle, and bottom to ensure the opening dimensions are correct before installation.

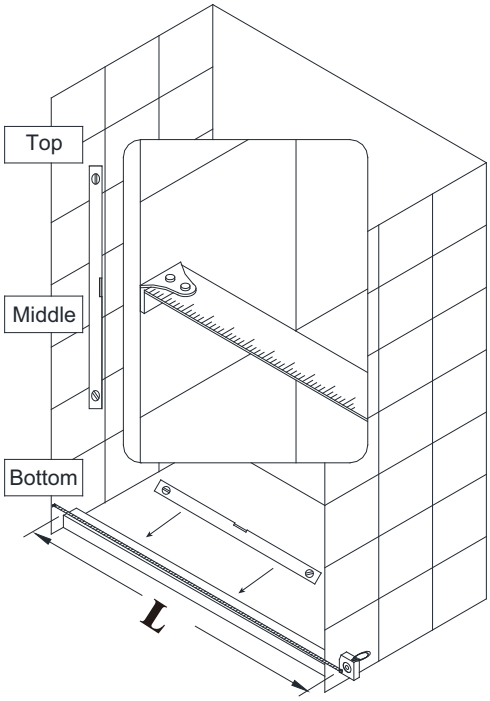

Tools Needed

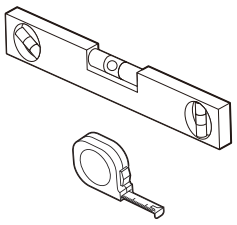

02

Measure the distance between the two walls.
Measure the length L1.
Calculate the value of L1 + 2 ".
If the result is greater than L, the running rail needs to be cut to fit.
If the result is less than or equal to L, no cutting is required.

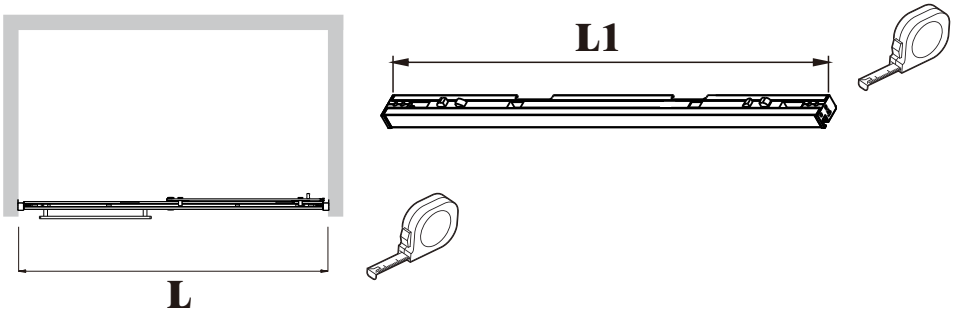

L1+2">L

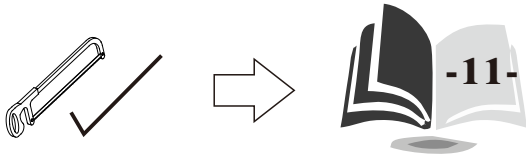

L1+2"≤L

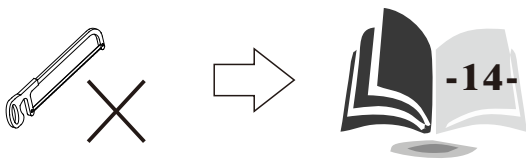

Parts Needed

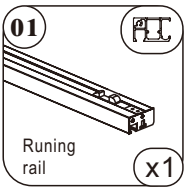

Tools Needed



For customer support, please call Avanity Corporation at 866-522-5578 weekdays 9:00 to 5:00 PST
Pour le support client, s'il vous plaît appelez au 866-522-5578 Avanity Corporation semaine 9:00-5:00 PST

03

When the running rail requires cutting：
1: Loosen and remove the end cap on one side of the running rail.
2: Use a screwdriver to loosen the buffer then slide it toward the center. This prevents the buffer from being damaged during the cutting process.

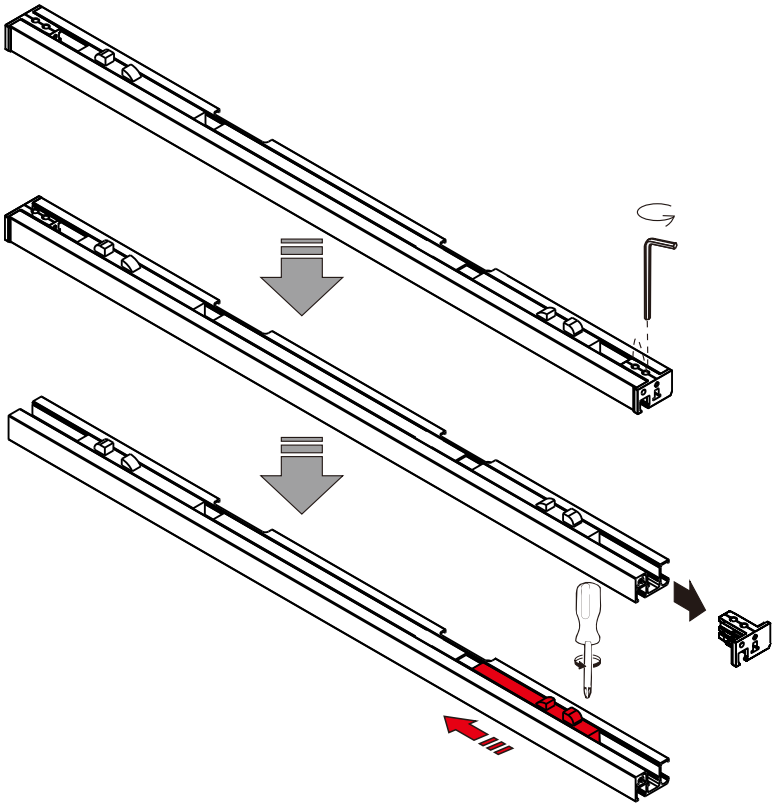

Parts Needed

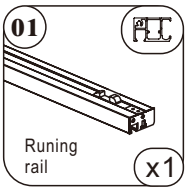

Tools Needed

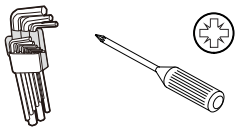

For customer support, please call Avanity Corporation at 866-522-5578 weekdays 9:00 to 5:00 PST
Pour le support client, s'il vous plaît appelez au 866-522-5578 Avanity Corporation semaine 9:00-5:00 PST

04

1:Measure the distance between the two walls.
2:Calculate the actual installation length of the running rail using the formular
L2 = L - 2 "
3: Cut off the excess length of the upper track .

⚠Note:
Ensure the buffer is not damaged during cutting, Remove any burrs after the cutting process.

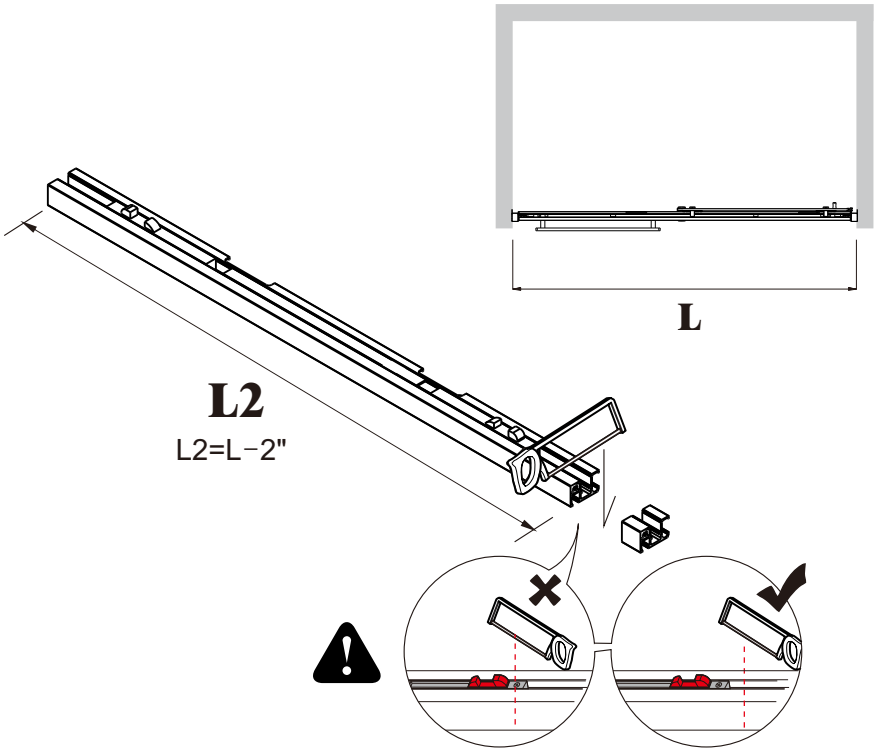

Parts Needed

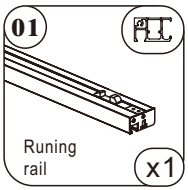

Tools Needed

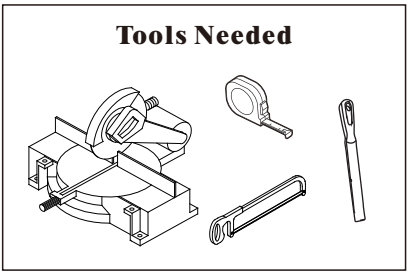

05 Refit the end cap onto the running rail (01), then fasten it securely with an Allen key.

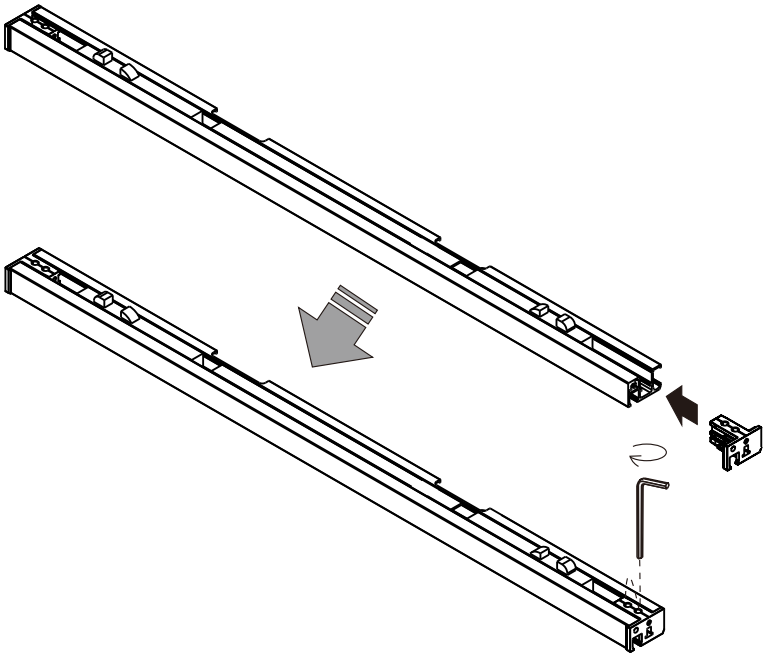

Parts Needed

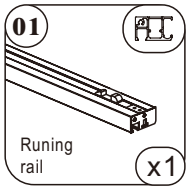

Tools Needed



For customer support, please call Avanity Corporation at 866-522-5578 weekdays 9:00 to 5:00 PST
Pour le support client, s'il vous plaît appelez au 866-522-5578 Avanity Corporation semaine 9:00-5:00 PST

06

Mark the installation position of the wall jamb.
Center and level the wall jamb.
Mark the hole positions of the wall jamb on the wall, then drill the holes and install wall plugs.

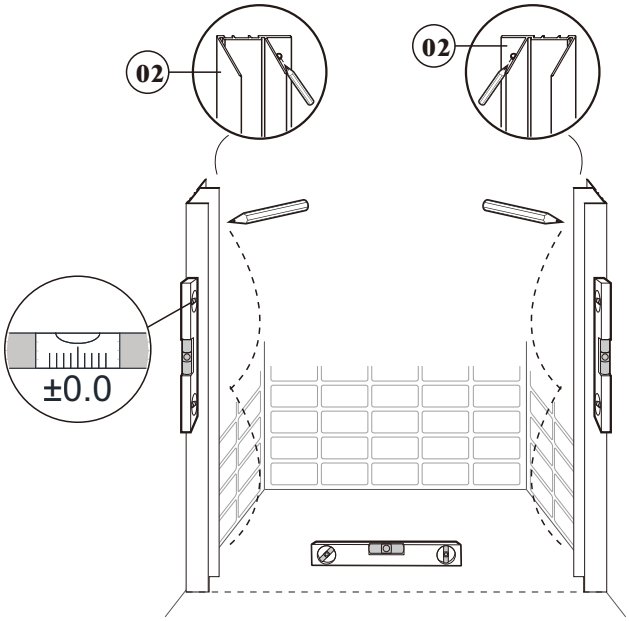

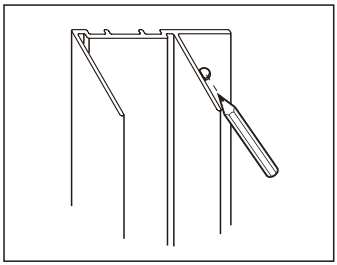

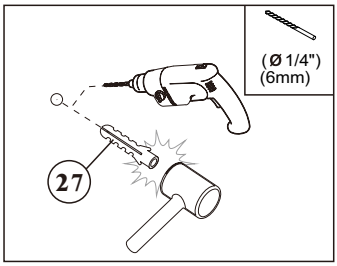

Parts Needed

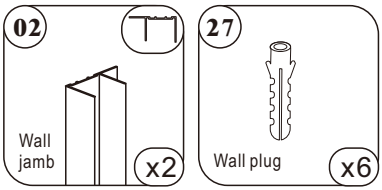

Tools Needed

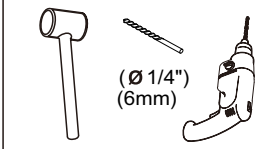

For customer support, please call Avanity Corporation at 866-522-5578 weekdays 9:00 to 5:00 PST
Pour le support client, s'il vous plaît appelez au 866-522-5578 Avanity Corporation semaine 9:00-5:00 PST

07 As shown in the diagram, push the hook on the buffer toward the center until it matches the position illustrated.

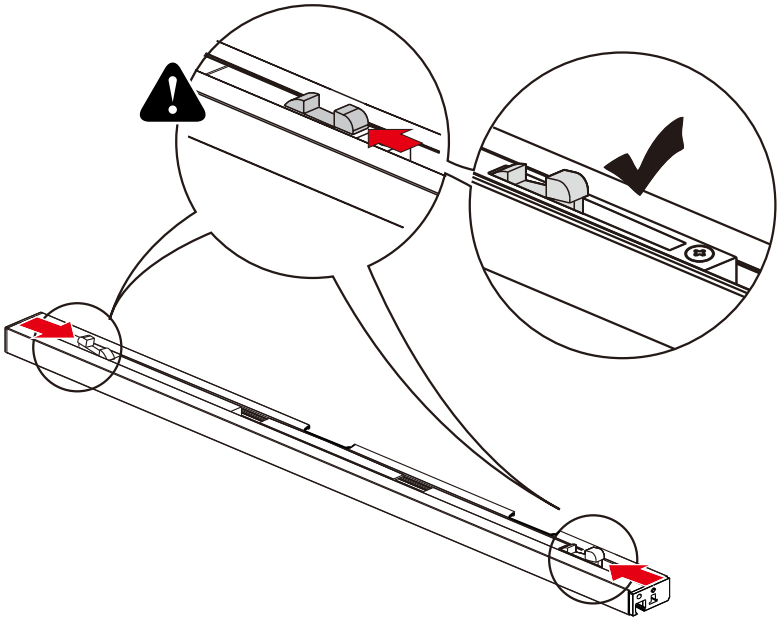

Parts Needed

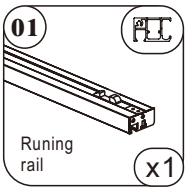

08

Measure the width of the fixed glass panel and denote it as L3.
Calculate the actual installation width using the formula: L4=L3-0.4".
Trim the excess width to match dimension L4.

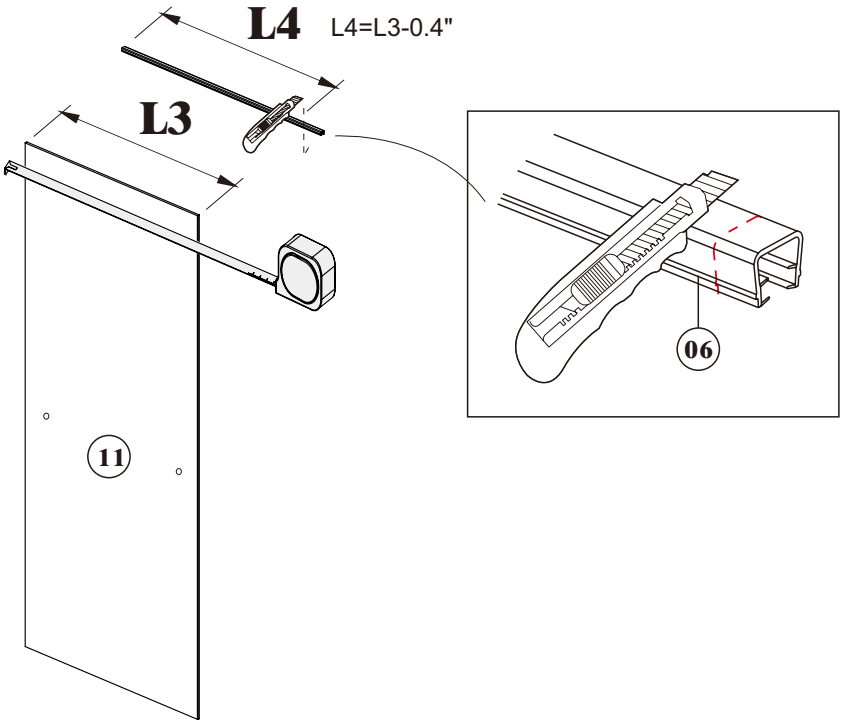

Parts Needed

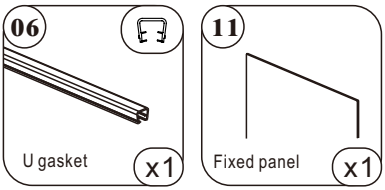

Tools Needed

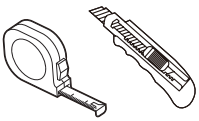

09 LH



As shown in the diagram, clip the U-shaped gasket (06) into the left side of the running rail (01).
Then, clip the decorative rubber strip (07) into the right side of the running rail (01).
Trim off the excess portion of the decorative gasket (07).

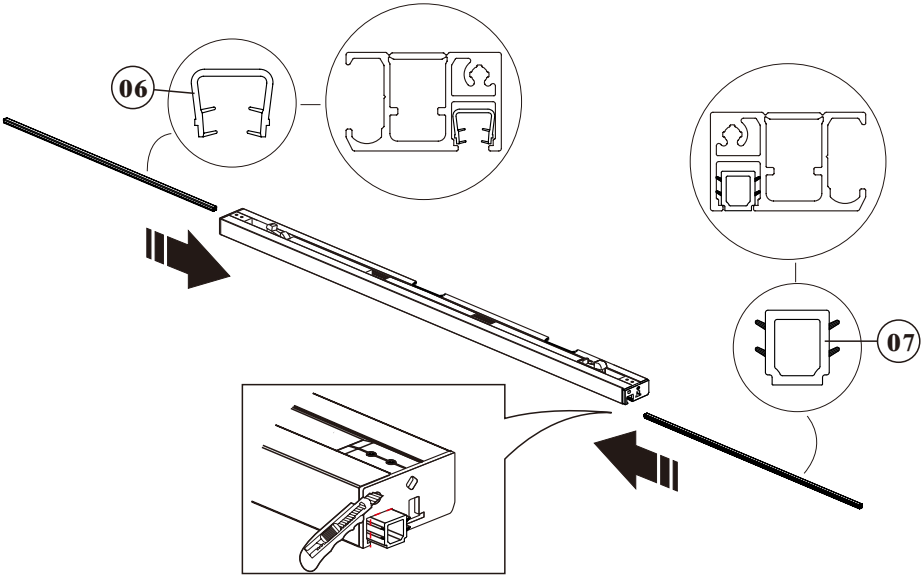

Parts Needed

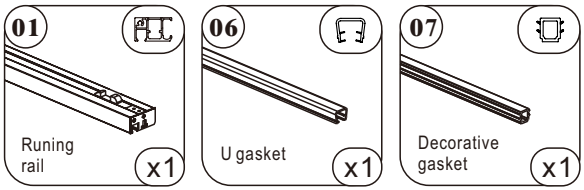

Tools Needed



09 RH



As shown in the diagram, clip the U-shaped gasket(06) into the right side of the running rail (01).
Then, clip the decorative rubber strip (07) into the left side of the running rail (01).
Trim off the excess portion of the decorative gasket (07).

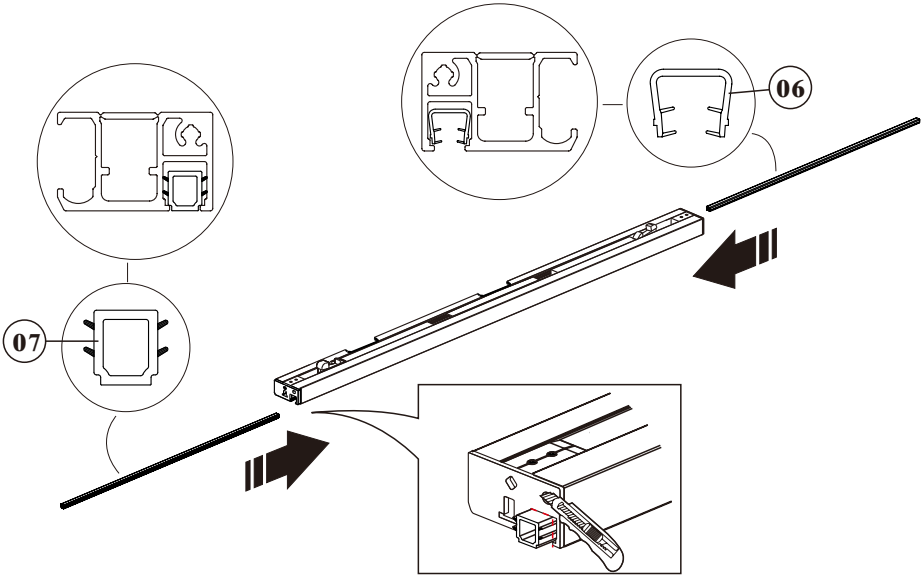

Parts Needed

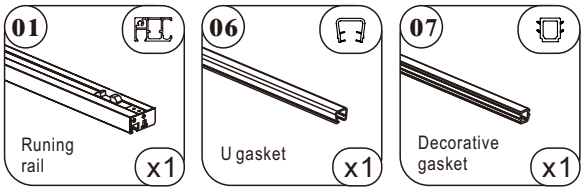

Tools Needed

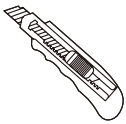

For customer support, please call Avanity Corporation at 866-522-5578 weekdays 9:00 to 5:00 PST
Pour le support client, s'il vous plaît appelez au 866-522-5578 Avanity Corporation semaine 9:00-5:00 PST

10

Clip the fixed panel (11) into the vertical profile (03).
Attach the Runing rail (01) to the fixed panel (11), Secure it with screws.

LH

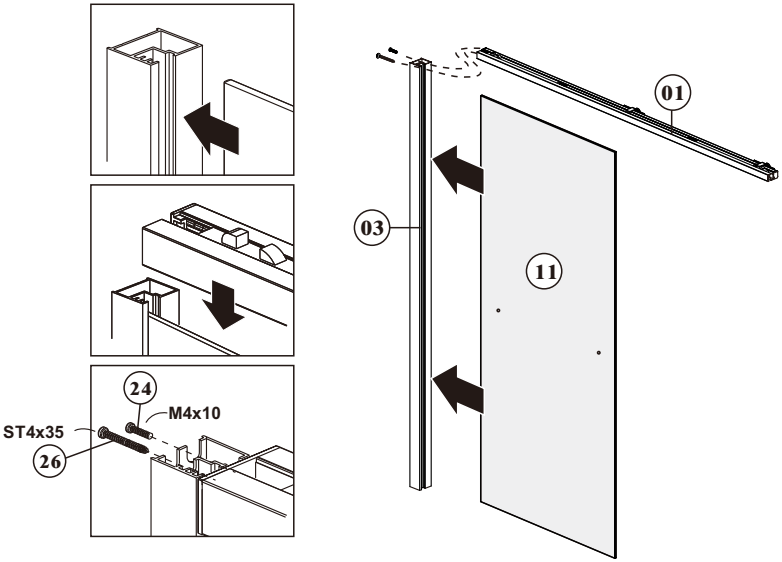

RH

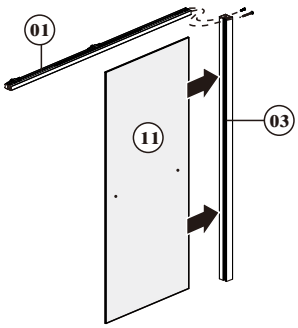

Parts Needed

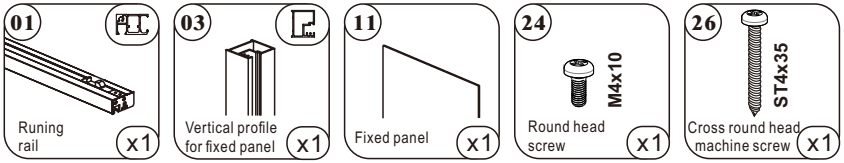

Tools Needed

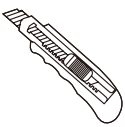

For customer support, please call Avanity Corporation at 866-522-5578 weekdays 9:00 to 5:00 PST
Pour le support client, s'il vous plaît appelez au 866-522-5578 Avanity Corporation semaine 9:00-5:00 PST

11 Insert the gasket (08) into the gap between the fixed panel (11) and the vertical profile (03).

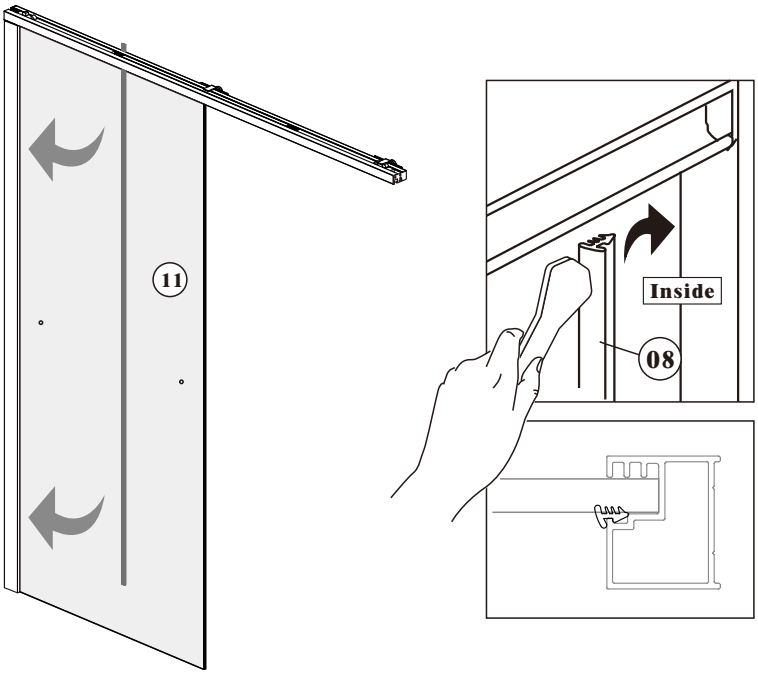

Parts Needed

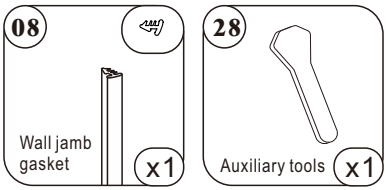

12 Fasten the door closed profile (04) to the running rail (01) with screws.

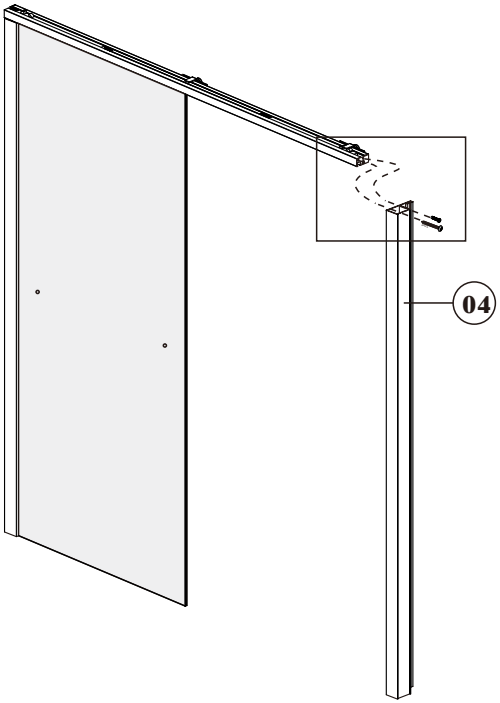

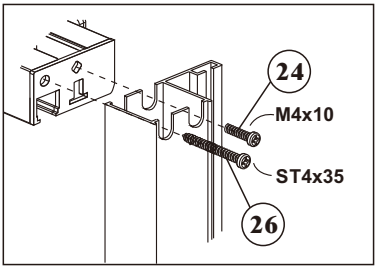

Parts Needed

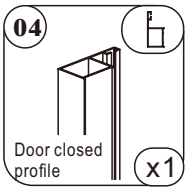



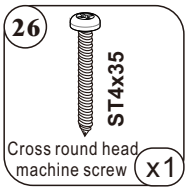

Tools Needed

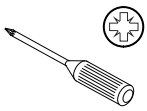

13

Fasten the wall jamb (02) securely to the wall.
For LH: Install the left-side profile first.
For RH: Install the right-side profile first.

LH

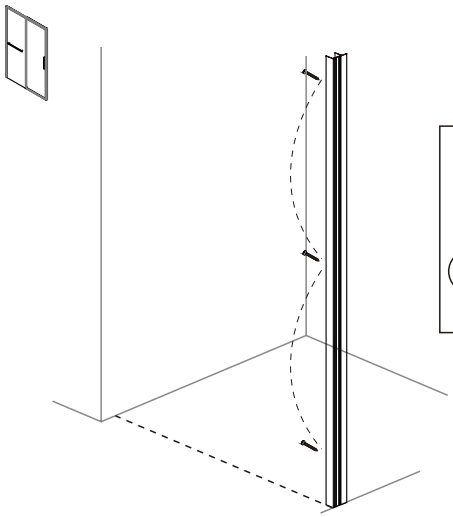

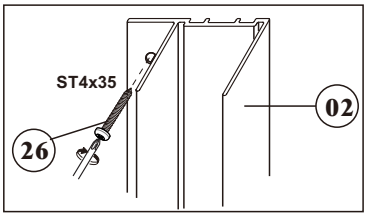

RH

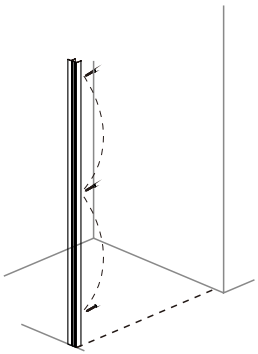

Parts Needed

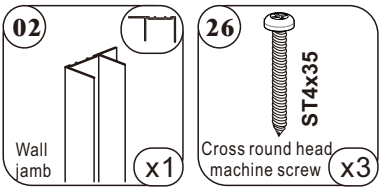

Tools Needed

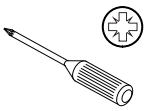

14

Clip wall Jamb (02) onto the door close profile .
Tilt the door closed profile (04) and insert it into the wall jamb (02).

LH

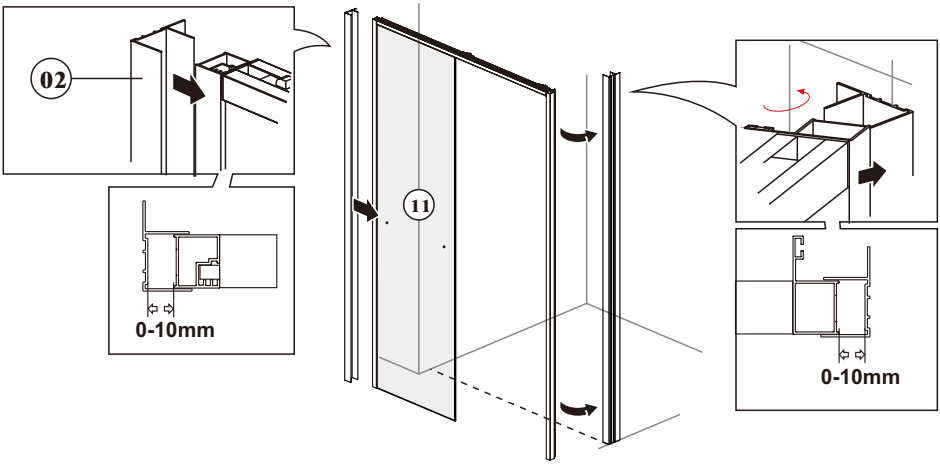

RH

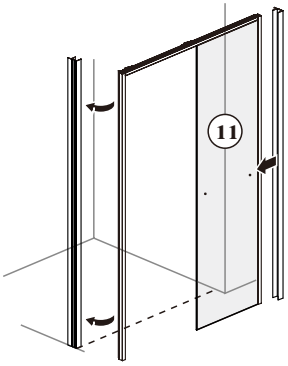

Parts Needed

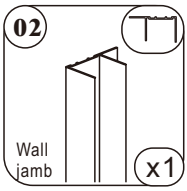

For customer support, please call Avanity Corporation at 866-522-5578 weekdays 9:00 to 5:00 PST
Pour le support client, s'il vous plaît appelez au 866-522-5578 Avanity Corporation semaine 9:00-5:00 PST

15 Fasten the unsecured wall jamb (02) with screws.
Attach the screw caps (22) to both wall jamb .

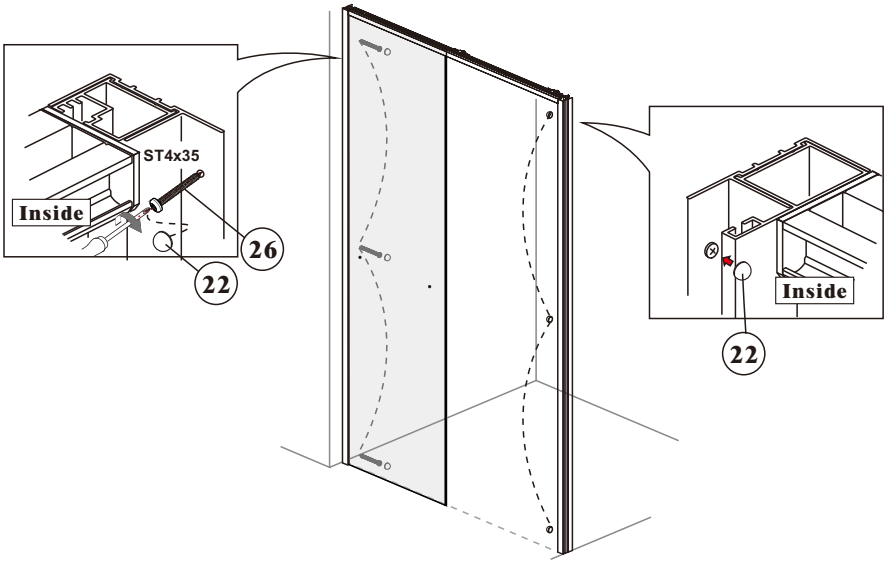

Parts Needed

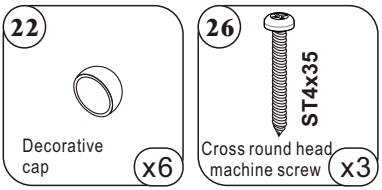

Tools Needed



16 Measure the distance from the edge of the fixed panel (11) to the door closed profile (04).
Calculate the actual installation size of the threshold (06) using the formula: L6=L5-0.1".
Trim off the excess length of the profile.
Remove any burrs if necessary.

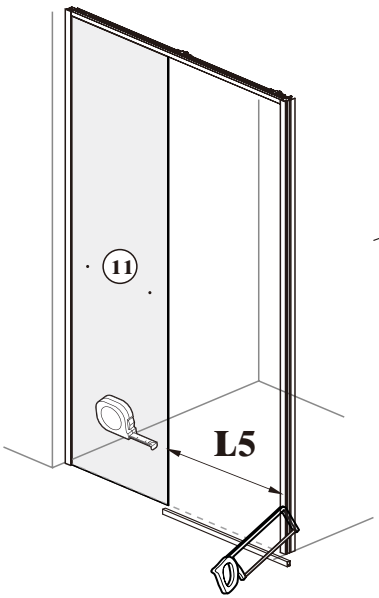

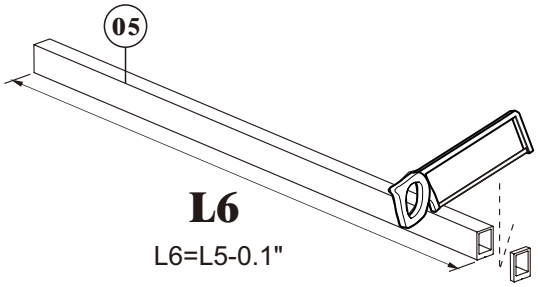

Parts Needed

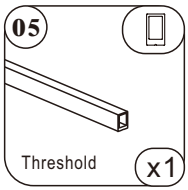

Tools Needed

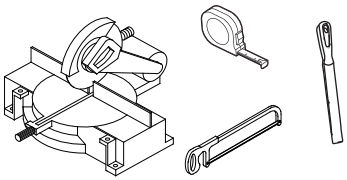

For customer support, please call Avanity Corporation at 866-522-5578 weekdays 9:00 to 5:00 PST
Pour le support client, s'il vous plaît appelez au 866-522-5578 Avanity Corporation semaine 9:00-5:00 PST

17

Clip the bottom guide (14) into the fixed panel (11).
Mark the positions of the guide and fix it accordingly.

⚠ Note: Different guide are required for left and right door-opening directions.

LH

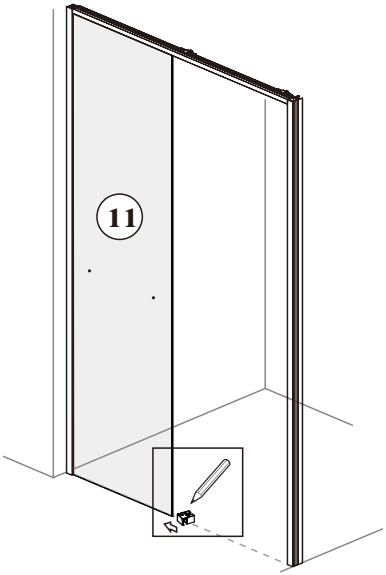

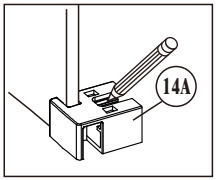

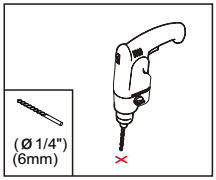

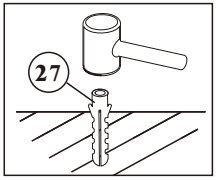

RH

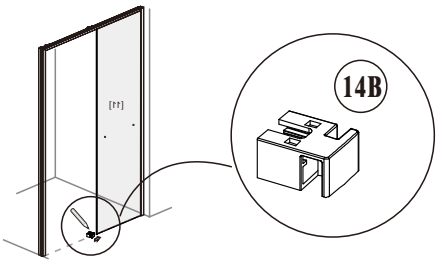

Parts Needed

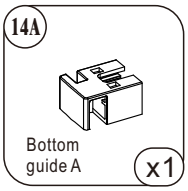

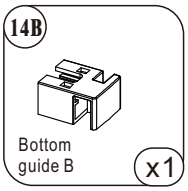

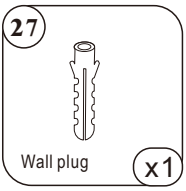

Tools Needed

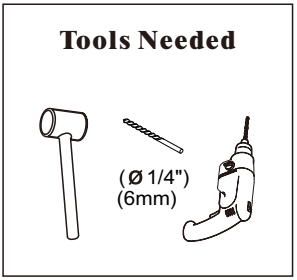

For customer support, please call Avanity Corporation at 866-522-5578 weekdays 9:00 to 5:00 PST
Pour le support client, s'il vous plaît appelez au 866-522-5578 Avanity Corporation semaine 9:00-5:00 PST

18 Apply silicone sealant to the threshold (05).
Clip the threshould into the bottom guide (14), then attach it to the fixed panel (11).
Fasten the assembly securely with screws.

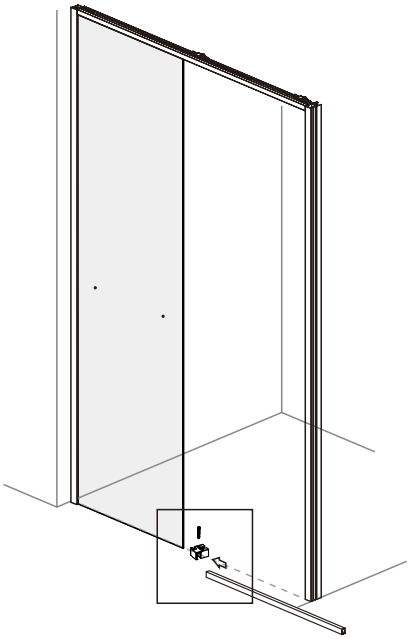

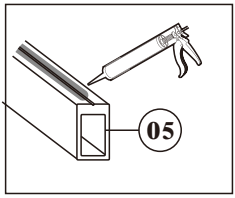

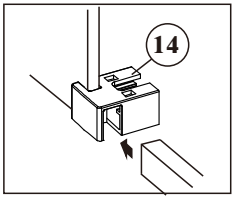

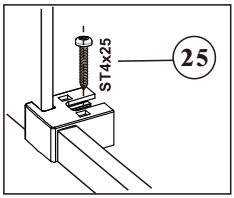

Parts Needed

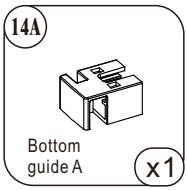

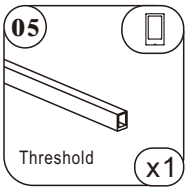



Tools Needed

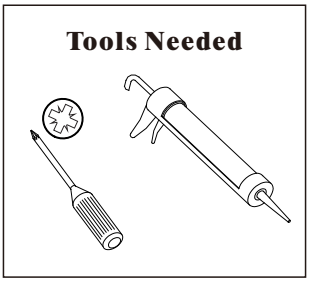

19

Remove the screws from the roller (12).
Fasten the roller (12) to the door panel (10)

LH

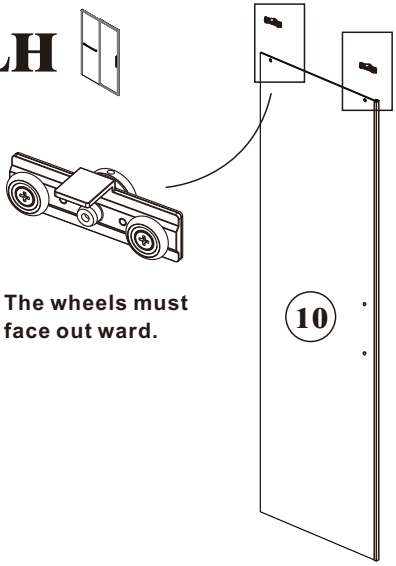

⚠ **The wheels must face out ward.**

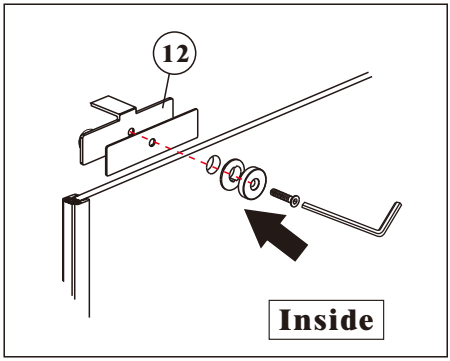

RH

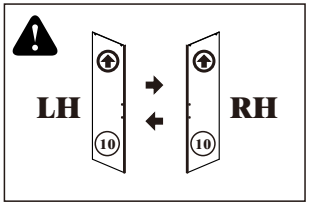

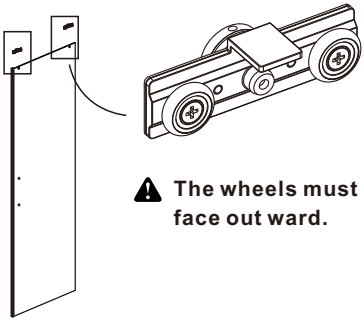

⚠ **The wheels must face out ward.**

Parts Needed

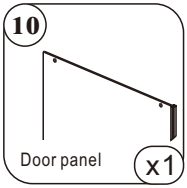

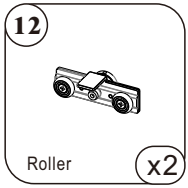

Tools Needed



For customer support, please call Avanity Corporation at 866-522-5578 weekdays 9:00 to 5:00 PST
Pour le support client, s'il vous plaît appelez au 866-522-5578 Avanity Corporation semaine 9:00-5:00 PST

20 Slowly insert the roller (12) through the notch in the running rail(01).
Clip the bottom of the door panel (10) into the bottom slider guide (15).
Connect with the bottom guide(14).

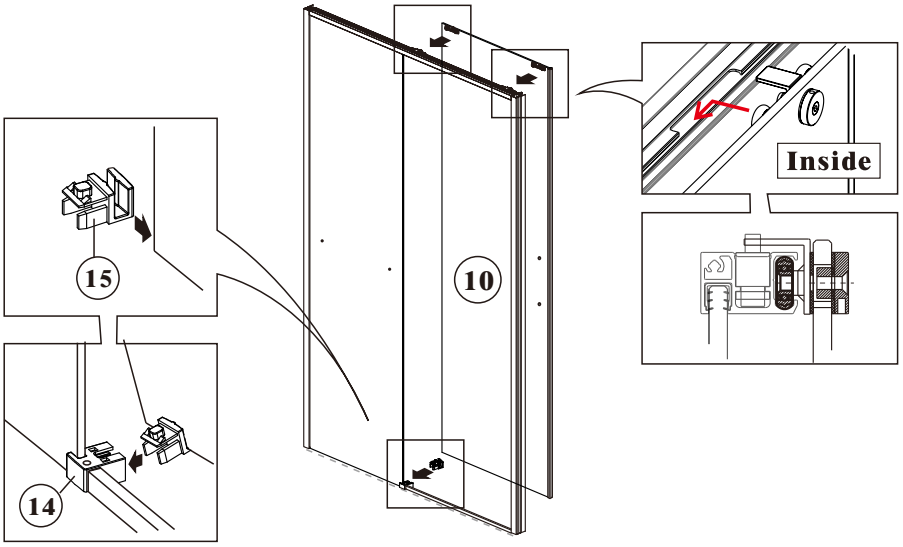

Parts Needed

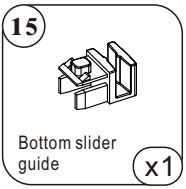

21 Mount the towel bar (13B) on the fixed panel (11).
Install the handle (13A) on the door panel (10).

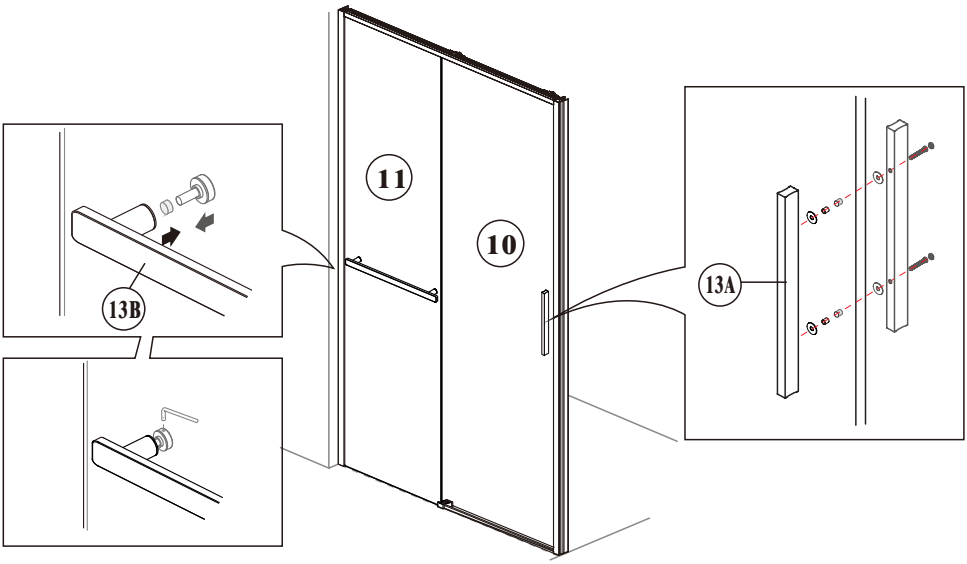

Parts Needed

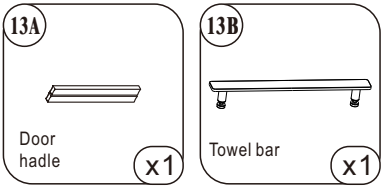

Tools Needed

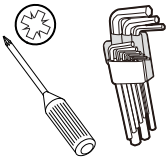

For customer support, please call Avanity Corporation at 866-522-5578 weekdays 9:00 to 5:00 PST
Pour le support client, s'il vous plaît appelez au 866-522-5578 Avanity Corporation semaine 9:00-5:00 PST

22 Trim 1" off the water-retaining edge of the longer mid gasket (09A).
Clip the trimmed gasket (09A) onto the door panel (10).
Clip the shorter gasket (09B) onto the fixed gpanel (11).

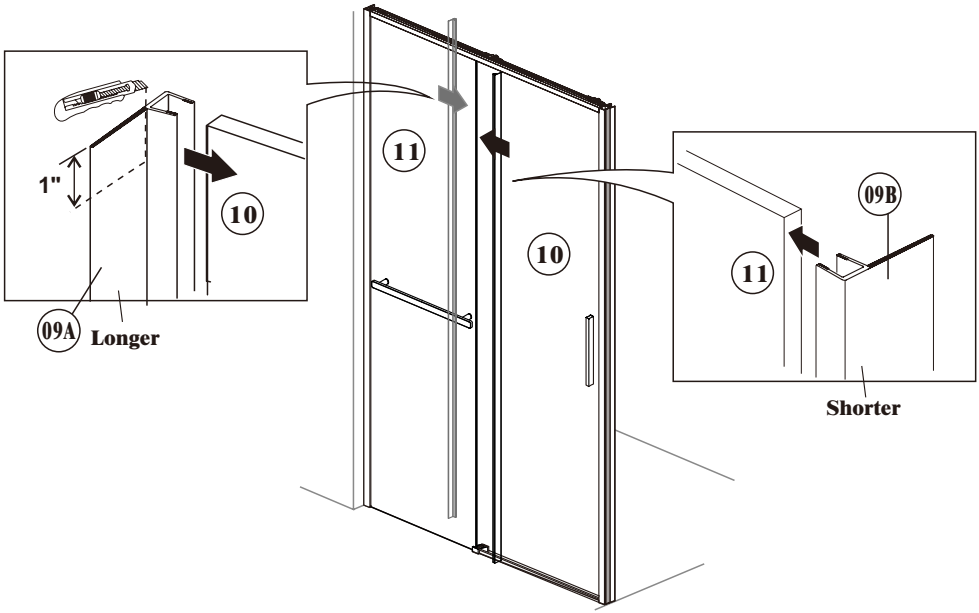

Parts Needed

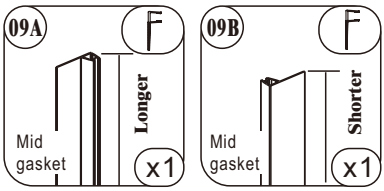

Tools Needed



23 If the door is not level after closing, adjust the roller with an Allen key until it is level.

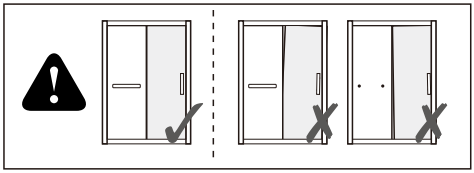

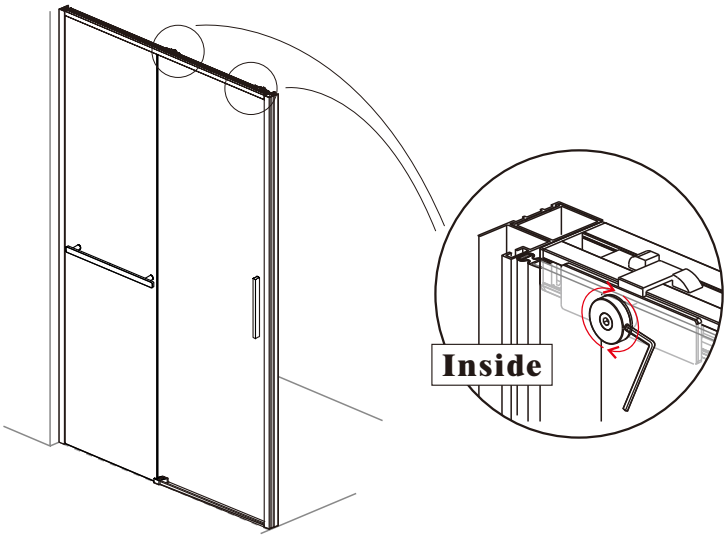

Tools Needed



24 Fasten the jambs (02) and vertical profiles (03) on both sides with screws.
Attach the screw caps (22).

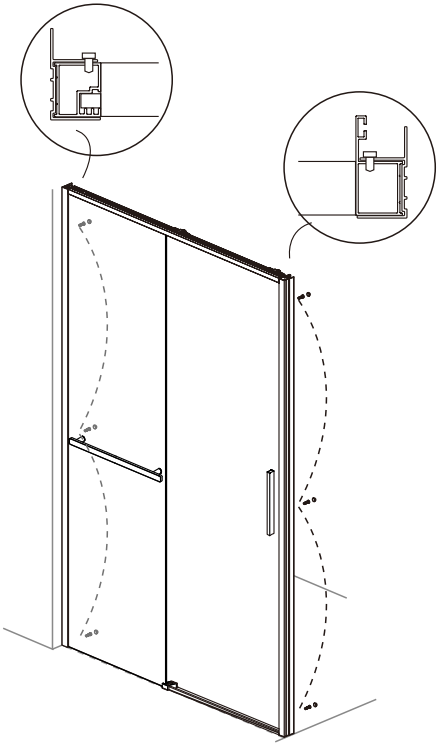

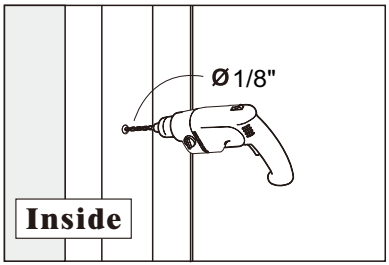

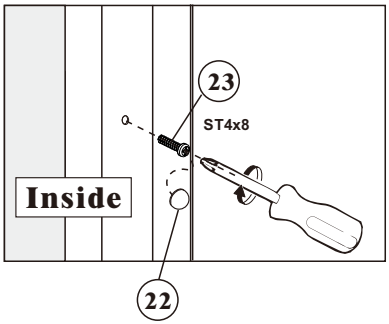

Parts Needed

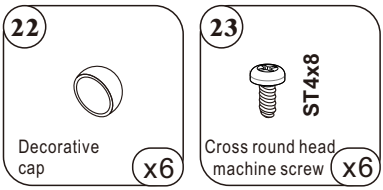

Tools Needed

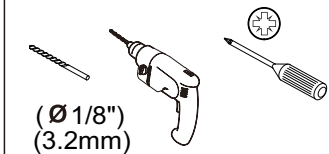

For customer support, please call Avanity Corporation at 866-522-5578 weekdays 9:00 to 5:00 PST
Pour le support client, s'il vous plaît appelez au 866-522-5578 Avanity Corporation semaine 9:00-5:00 PST

25

Fit the caps onto the wall jambs and vertical profiles.

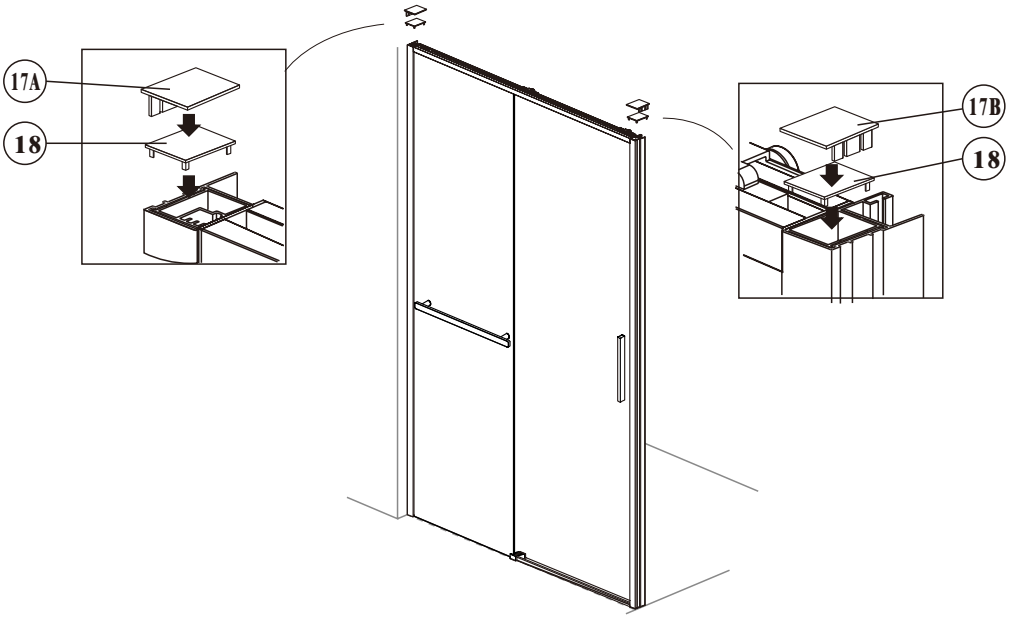

Parts Needed

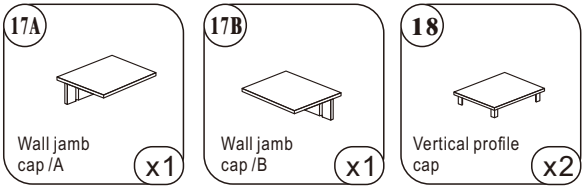

26

Seal the holes on both sides with decorative cap .

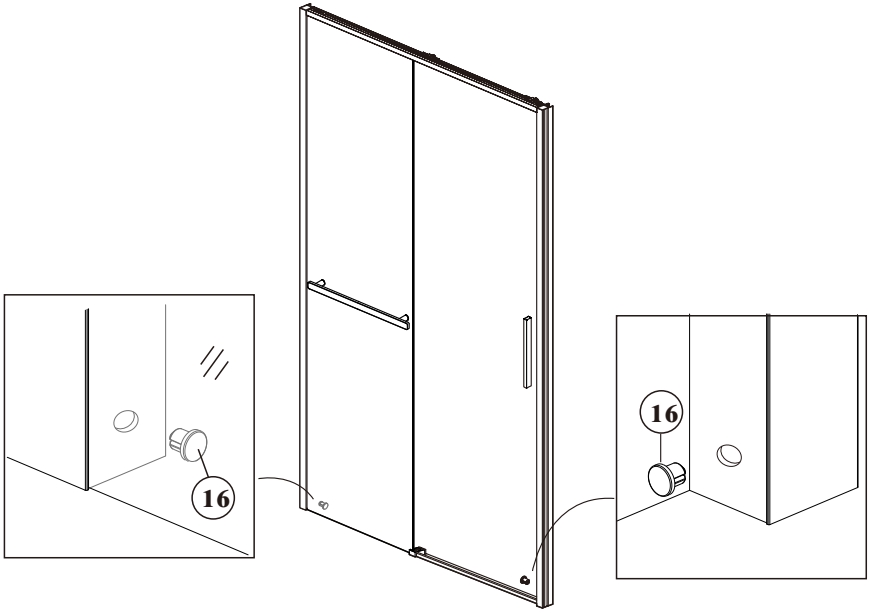

Parts Needed



27

Slide the door until there is no gap.
Tighten the unsecured bumper at the top with a screwdriver.

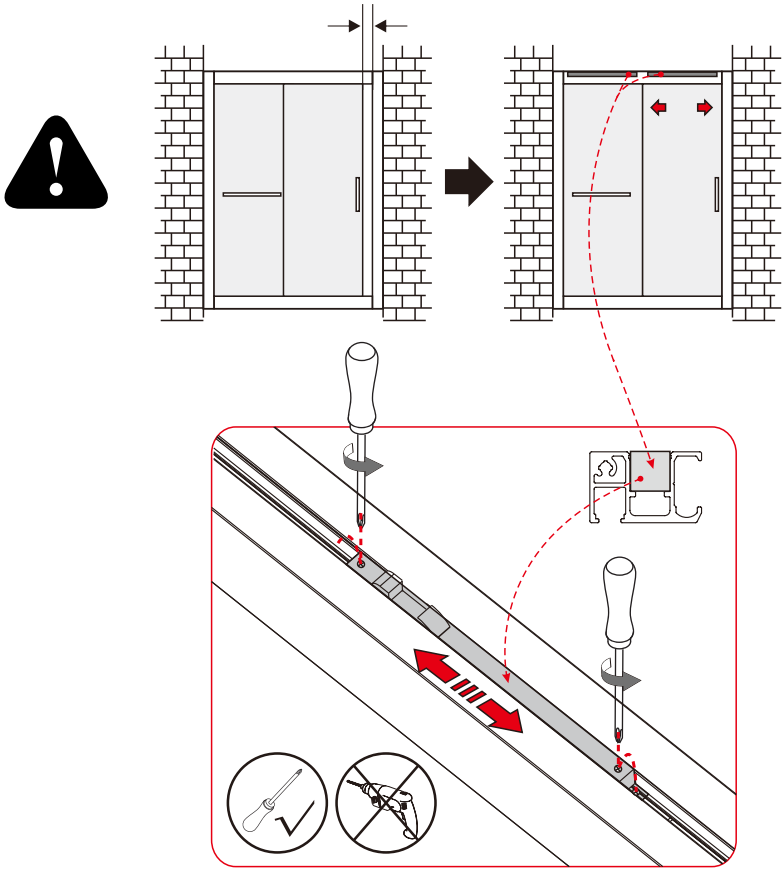

Tools Needed

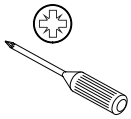

28 Apply silicone sealant only to the outside edge. Allow24 hours for the sealant to dry before using the door.

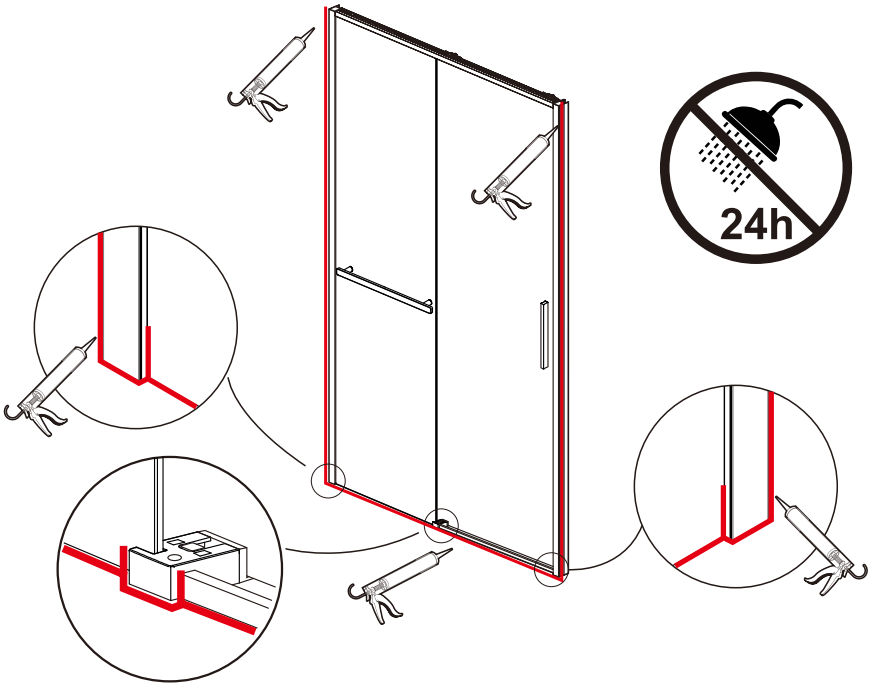

Tools Needed

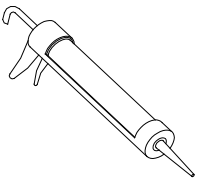

Routine Inspection & Care

To maintain safe operation and extend the life of your shower door, we recommend periodic inspection of the glass and hardware components.

- Verify the enclosure is stable and operates smoothly
- Check that all screws and fasteners are tight
- Confirm the sliding door moves freely and aligns correctly
- Inspect glass edges for chips, cracks, or damage
- Examine seals and silicone for gaps or deterioration

If any damage or misalignment is detected, discontinue use until the issue has been corrected.

Glass Care

- Wipe glass surfaces after each use with a soft cloth or squeegee to reduce water spots and soap residue.
- Clean using mild soap and water or a non-abrasive glass cleaner.
- Do not use abrasive cleaners, scouring pads, or metal brushes, as these may damage the glass surface.

NOTE: Hard water deposits left to dry may permanently mark the glass over time.

Hardware Care

- Dry metal components after use to maintain finish quality.
- Clean with a soft cloth and mild cleaner only.
- Do not use cleaners containing bleach, ammonia, acid, or abrasives.
- Rinse and dry thoroughly after cleaning.

Sealant Maintenance

- Inspect silicone seals periodically for cracking or separation.
- Replace silicone as needed to prevent water leakage.

For customer support, please call Avanity Corporation at 866-522-5578 weekdays 9:00 to 5:00 PST
Pour le support client, s'il vous plaît appelez au 866-522-5578 Avanity Corporation semaine 9:00-5:00 PST

Troubleshooting Guide

Before contacting customer support, please have your **model number**, **purchase information**, and **installation date** available.

Issue	Possible Causes	Solutions
Door does not slide smoothly	• Rollers not aligned or loose	• Check roller alignment and tighten fixings
	• Debris in track or guide	• Clean track and guides
	• Bottom guide incorrectly positioned	• Reposition bottom door guide as needed
Door does not close evenly	• Roller height misadjusted	• Adjust roller height to align door
	• Wall profiles not plumb	• Verify wall profiles are level and plumb
Water leakage	• Seals incorrectly installed	• Check seal orientation and placement
	• Incomplete silicone seal	• Apply silicone along full interior perimeter
	• Seals installed incorrectly	• Reinstall seals correctly
	• Door not closing fully	• Adjust door alignment to ensure full closure
Door rubbing or contacting threshold	• Threshold not level	• Confirm threshold is level
	• Rollers set too low or high	• Adjust roller height
	• Bottom guide misaligned	• Reposition bottom doorguide
Door feels loose or unstable	• Loose screws or brackets	• Tighten all screws and fasteners
	• Anti-jump stops not secured	• Secure anti-jump components
	• Bottom guide missing or loose	• Check bottom guide installation
Glass panels misaligned	• Improper glass positioning	• Reposition glass panels
	• Fixings not tightened evenly	• Tighten fixings evenly from the inside
Noise during operation	• Rollers not seated correctly	• Check roller seating in guide rail
	• Guides contacting glass incorrectly	• Adjust guides to prevent binding
Silicone peeling or leaking	• Poor surface preparation	• Remove and reapply silicone
	• Shower used before silicone cured	• Allow at least 24 hours curing time before use

For customer support, please call Avanity Corporation at 866-522-5578 weekdays 9:00 to 5:00 PST
Pour le support client, s'il vous plaît appelez au 866-522-5578 Avanity Corporation semaine 9:00-5:00 PST