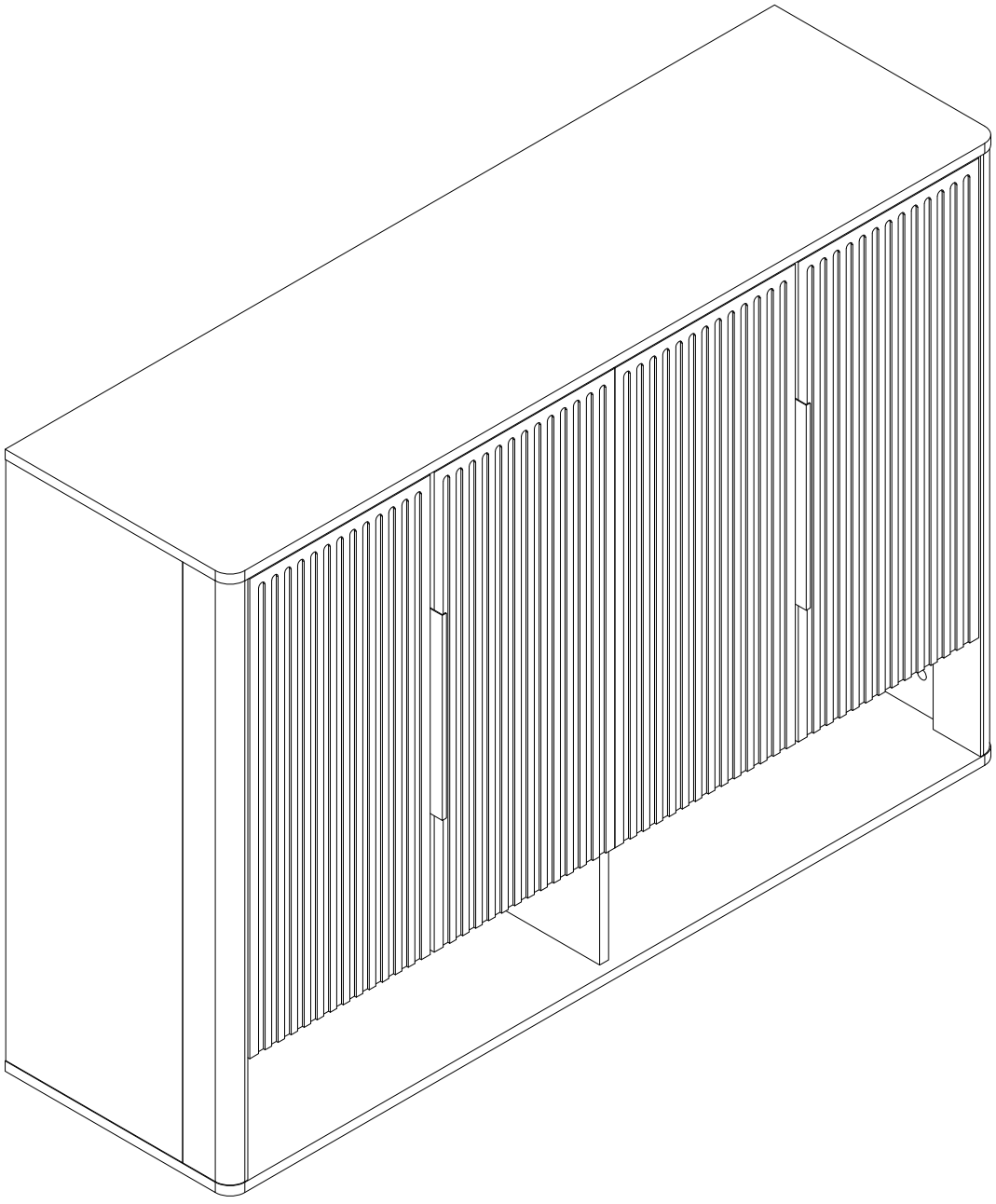

DS-SC006F/B

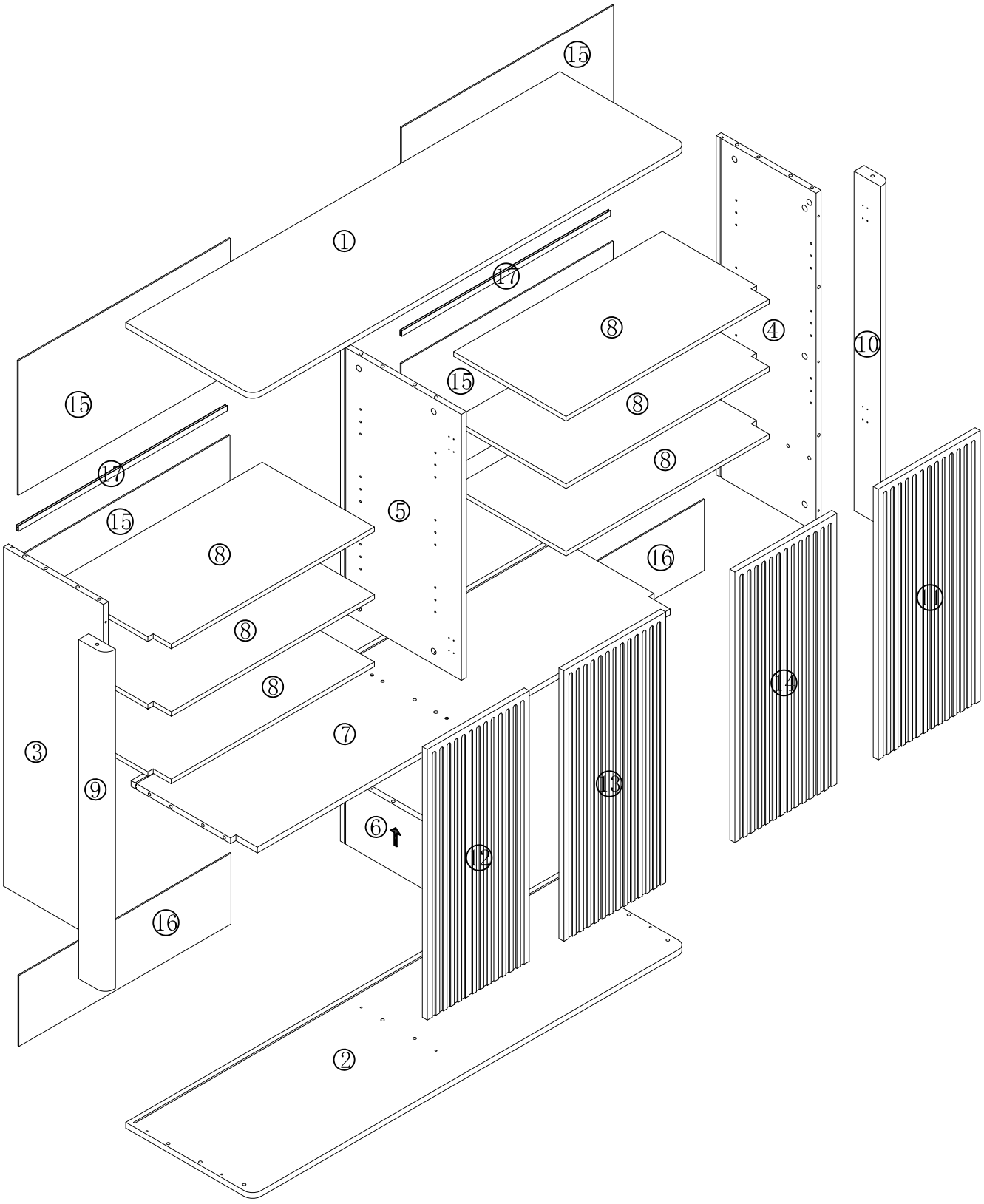
①
②
③
④
⑤
⑥
⑦
⑧
⑨
⑩
⑪
⑫
⑬
⑭
⑮
⑯
⑰

1

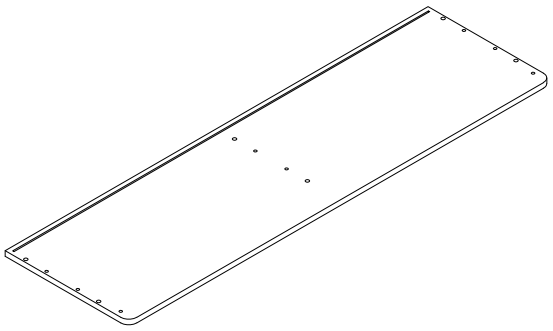

1300*380*15mm 1PC

2

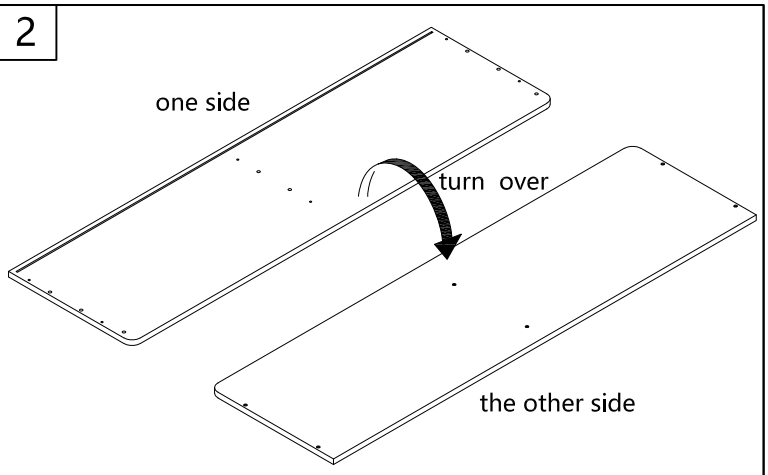

1300*380*15mm 1PC

3

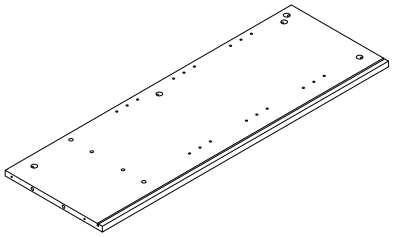

880*299*15mm 1PC

4

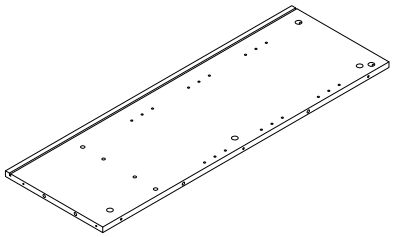

880*299*15mm 1PC

5

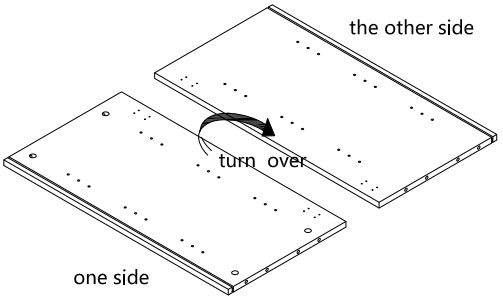

690*362*15mm 1PC

6

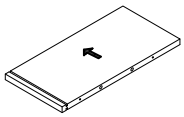

175*362*15mm 1PC

7

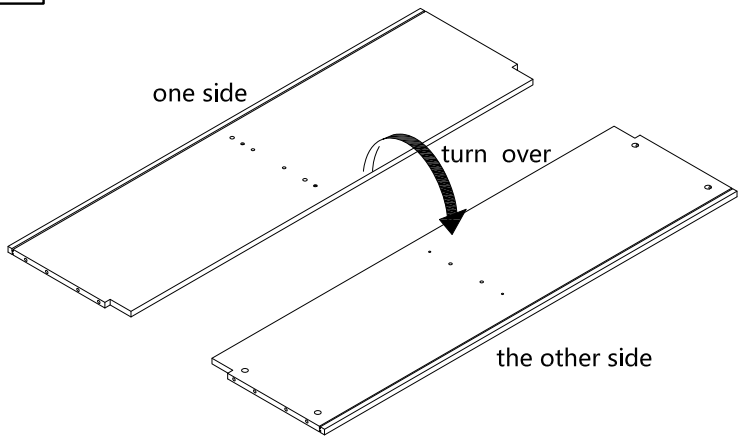

1268*362*15mm 1PC

8

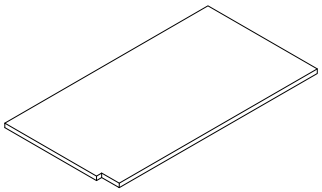

624.5*336*12mm 6PCS

9

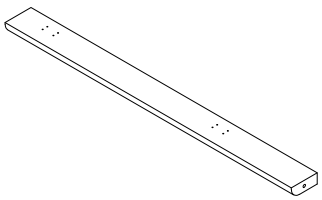

880*80*30mm 1PC

10

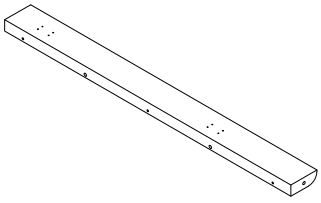

880*80*30mm 1PC

11

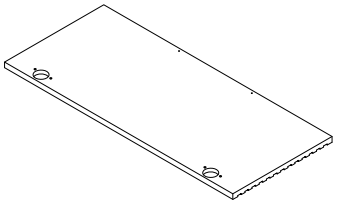

702*305*15mm 1PC

12

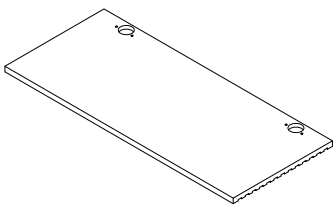

702*305*15mm 1PC

13

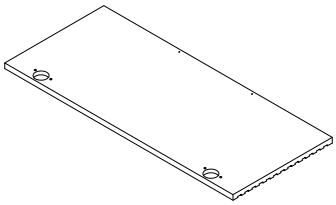

702*305*15mm 1PC

14

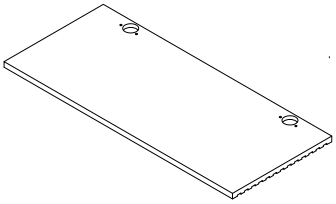

702*305*15mm 1PC

15

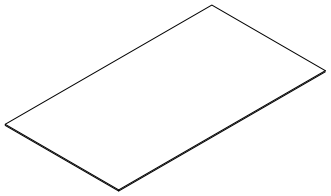

348.5*635*3mm 4PCS

16

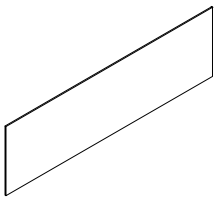

184*635*3mm 2PCS

17



L=625mm 2PCS

A

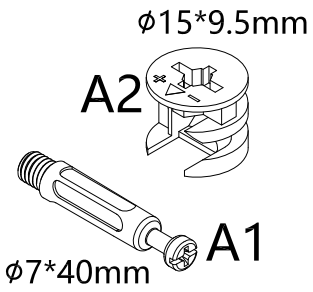

12PCS

B

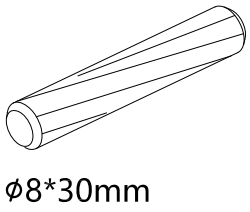

28PCS

C

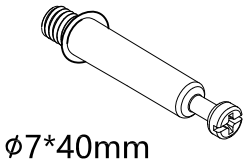

6PCS

D

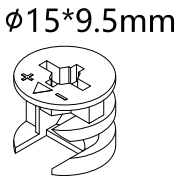

6PCS

E

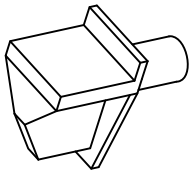

24PCS

F

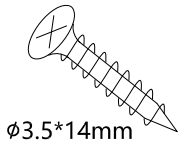

24PCS

G

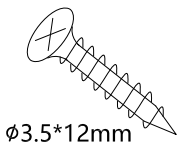

48PCS

H

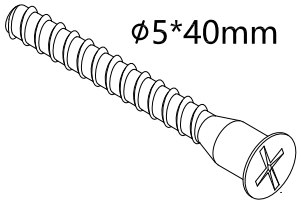

8PCS

I

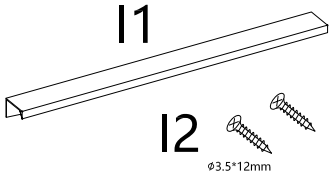

2PCS

J

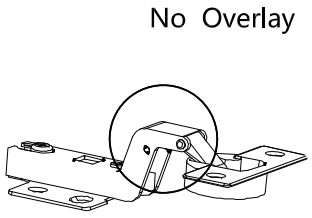

4PCS

K

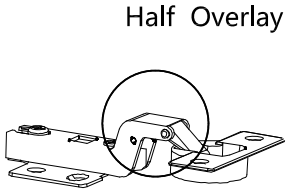

4PCS

L

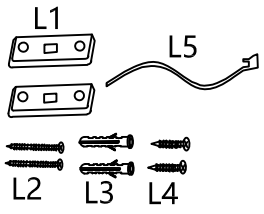

2PCS

M

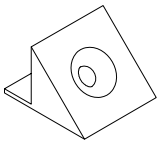

24PCS

N



8PCS

O



18PCS

STEP 1

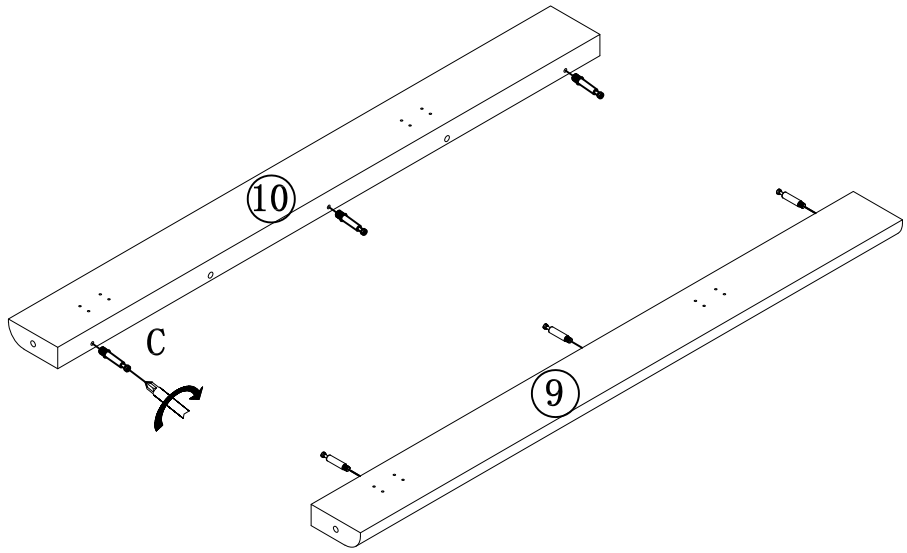

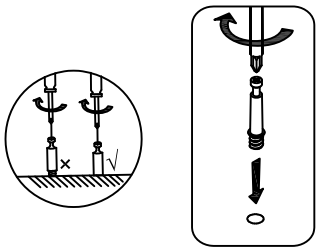

	C×6PCS

STEP 2

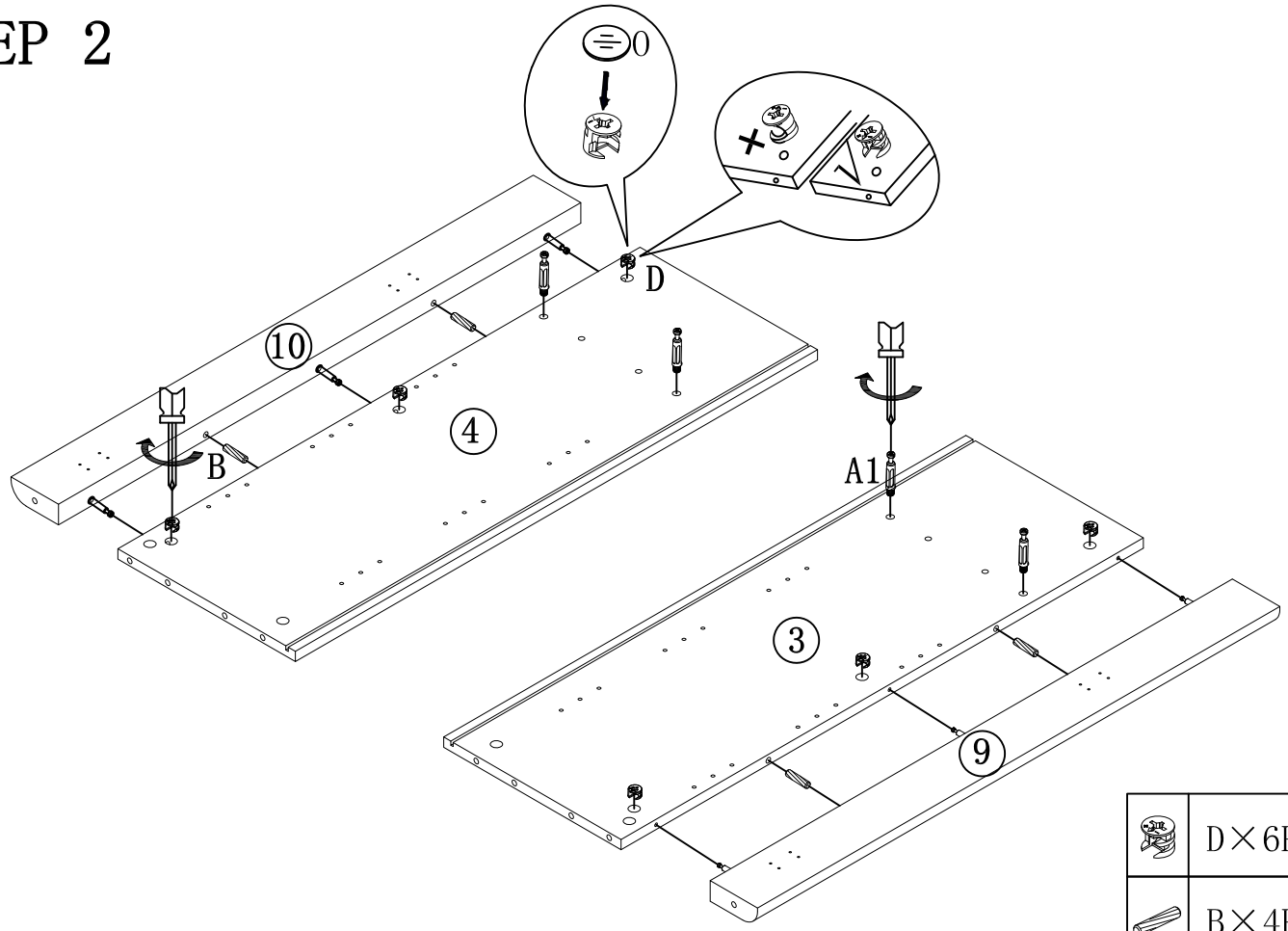

			D×6PCS
			B×4PCS
	A1×4PCS		O×6PCS

STEP 3

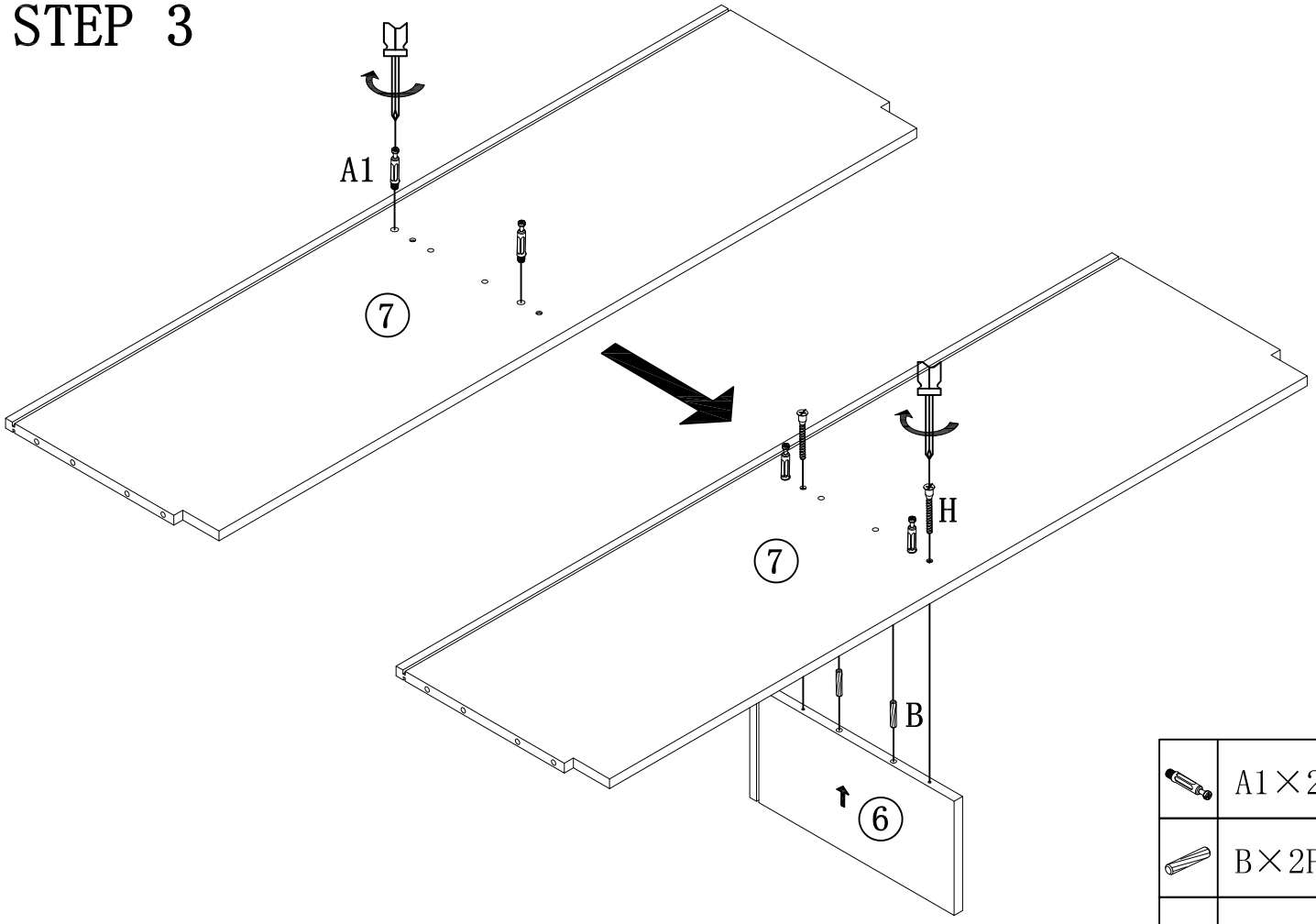

	A1×2PCS
	B×2PCS
	H×2PCS

STEP 4

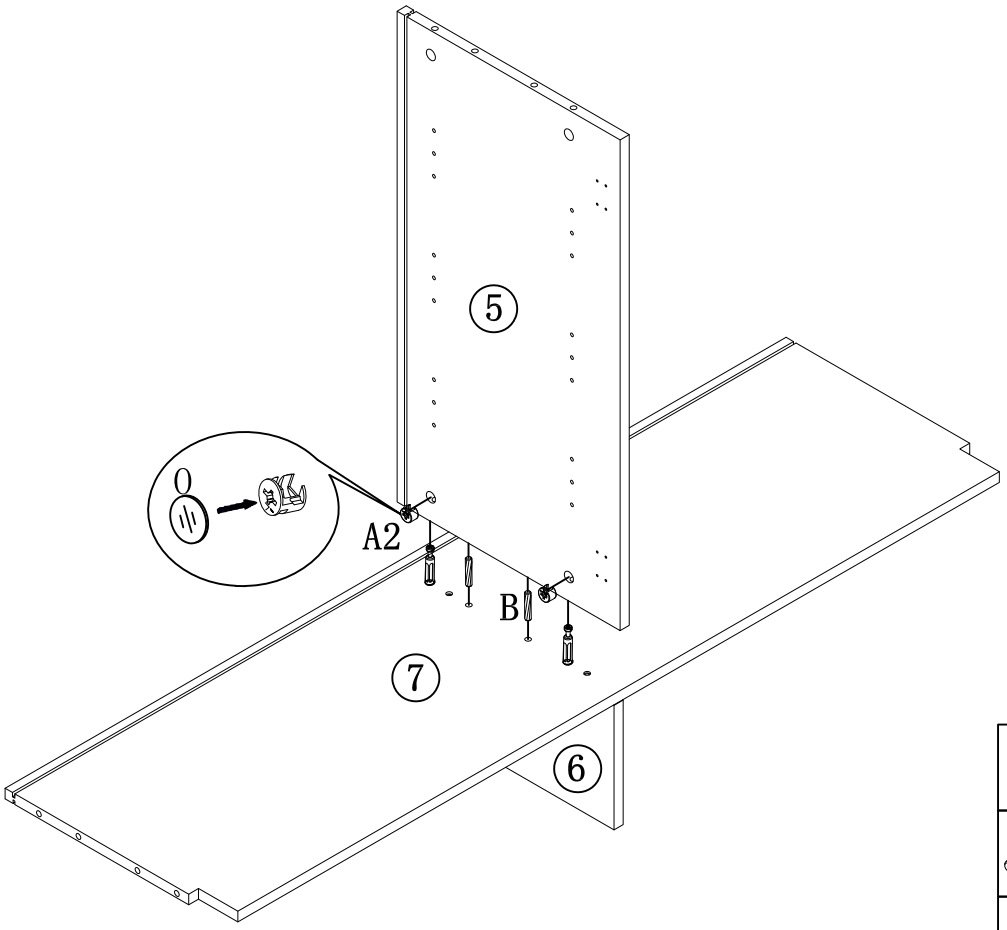

	A2×2PCS
	B×2PCS
	O×2PCS

STEP 5

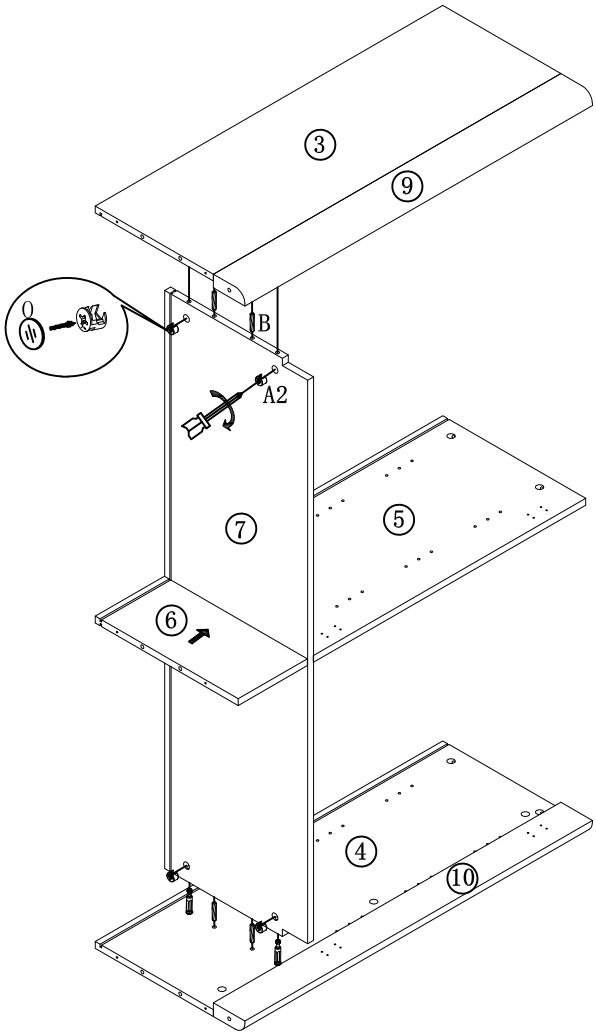

	A2×4PCS
	B×4PCS
	0×4PCS

STEP 6

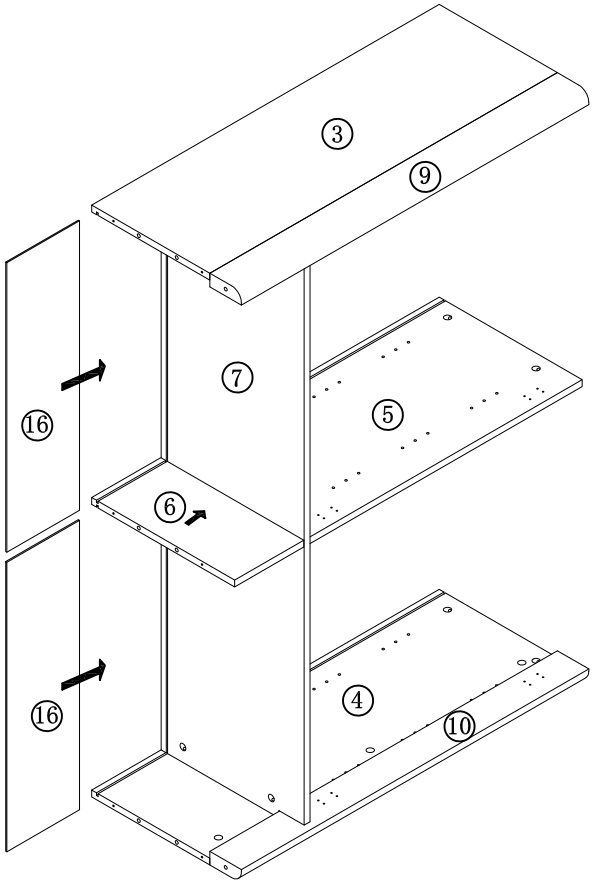

STEP 7

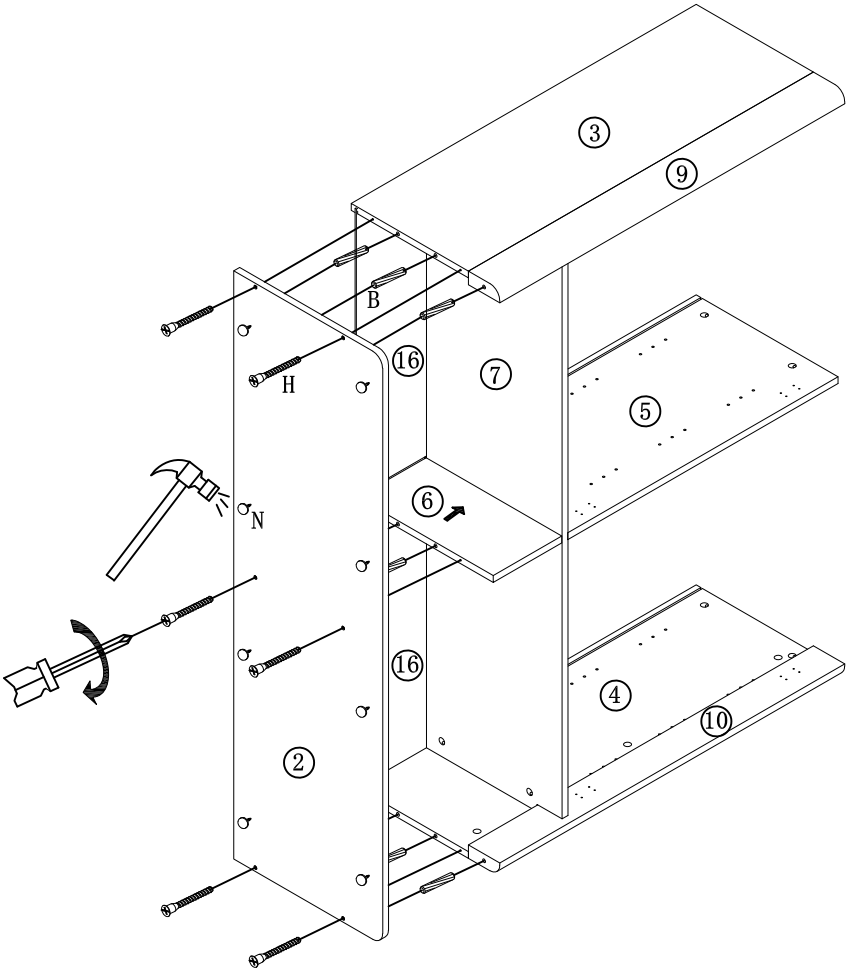

	B×8PCS
	H×6PCS
	N×8PCS

STEP 8

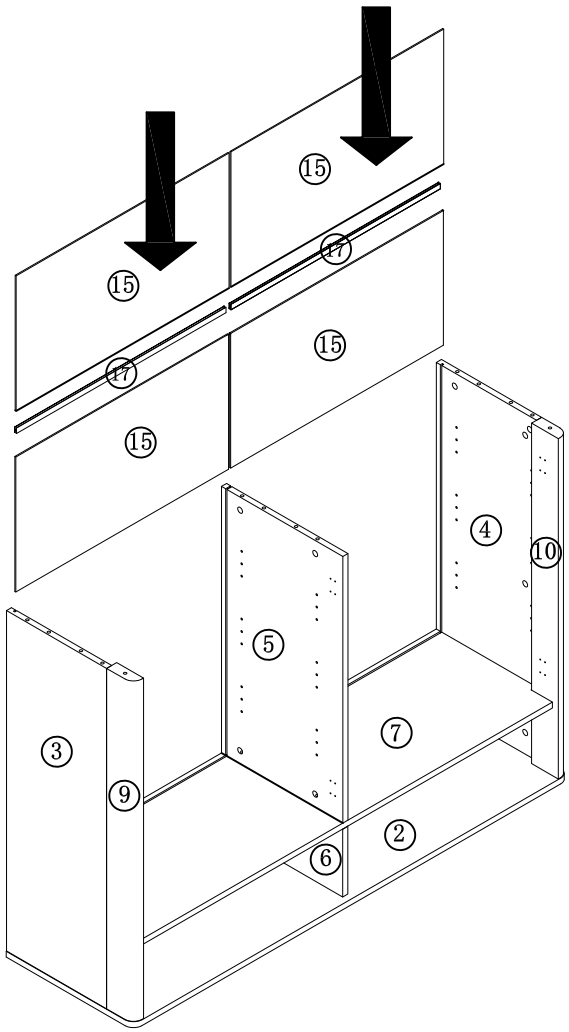

STEP 9

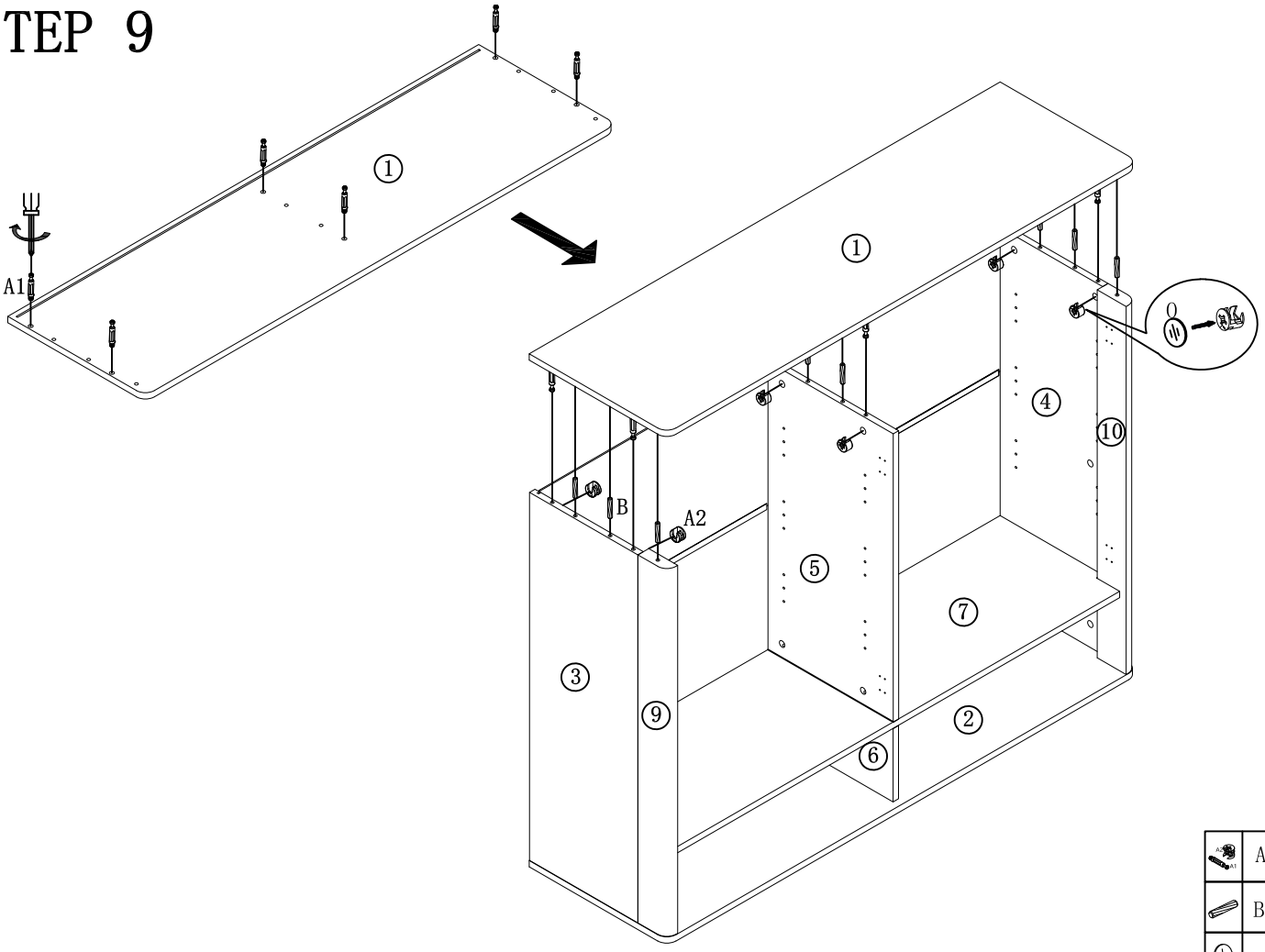

	A×6PCS
	B×8PCS
	O×6PCS

STEP 10

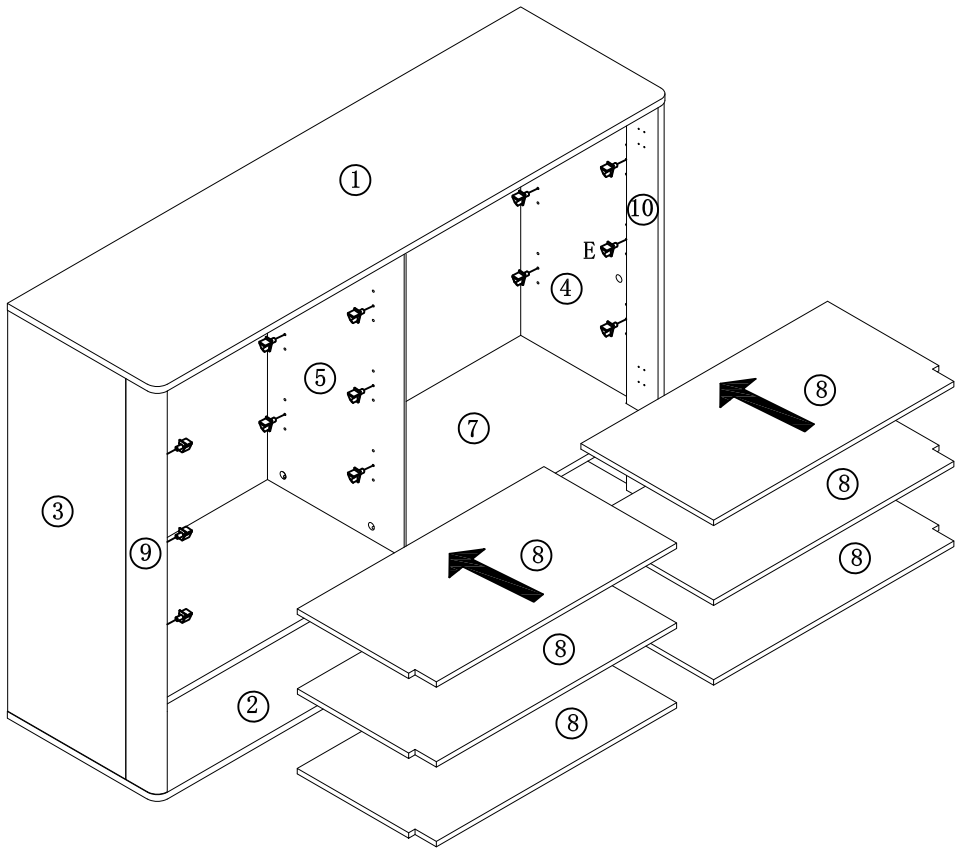

	E×24PCS

STEP 11

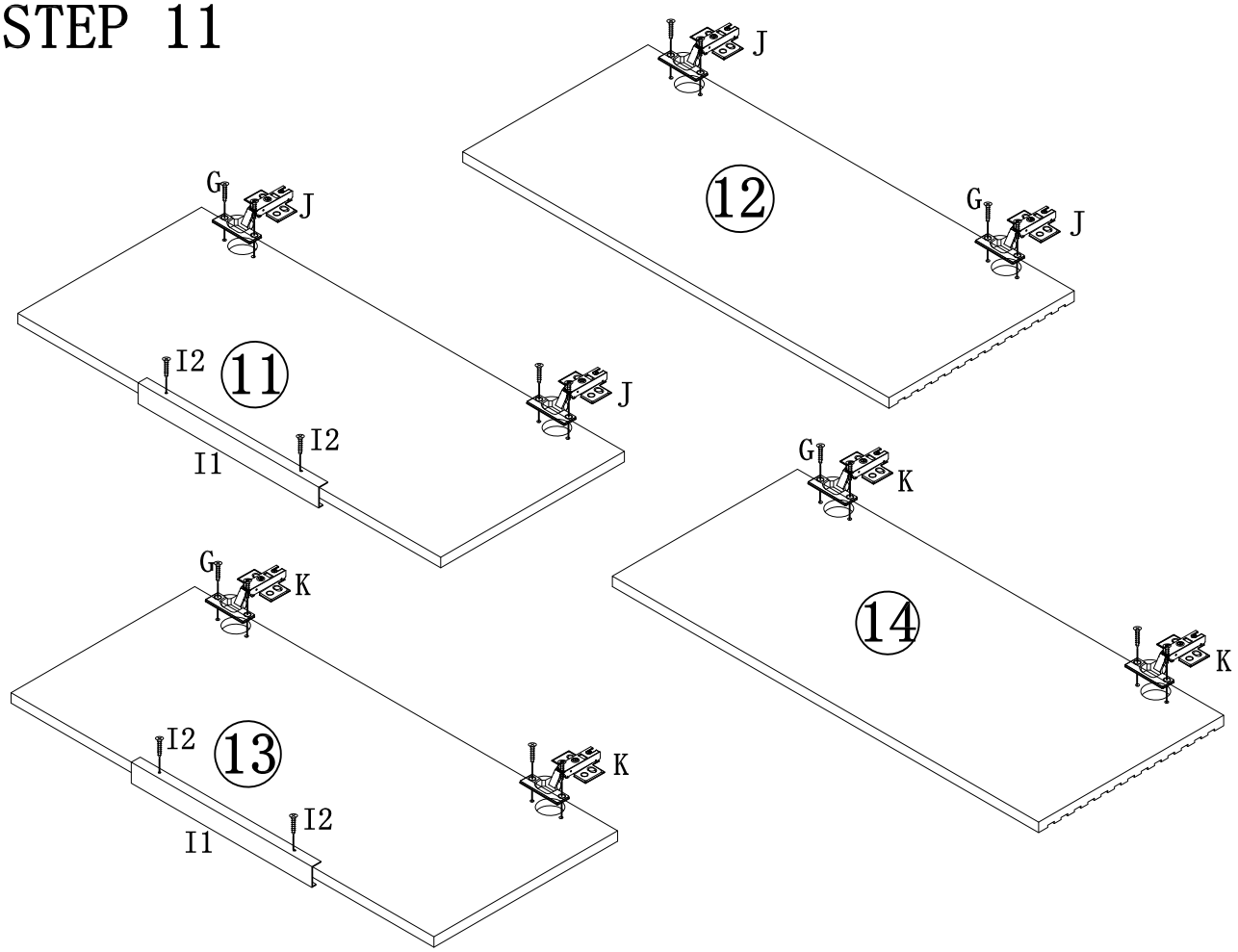

	J×4PCS
	K×4PCS
I1 I2	I×2PCS
	G×16PCS

STEP 12

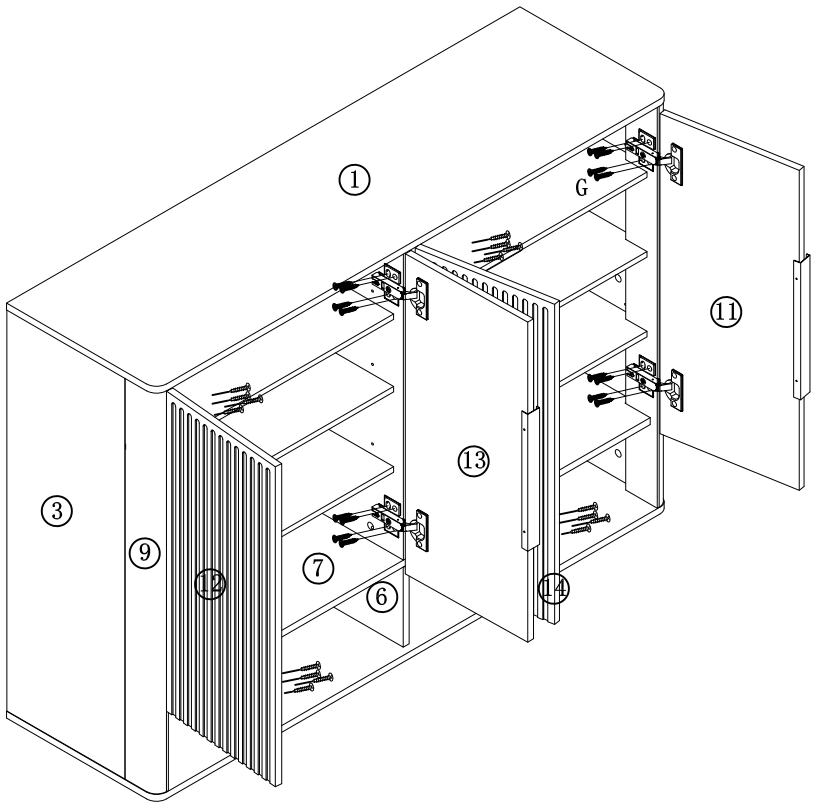

	G×32PCS

STEP 13

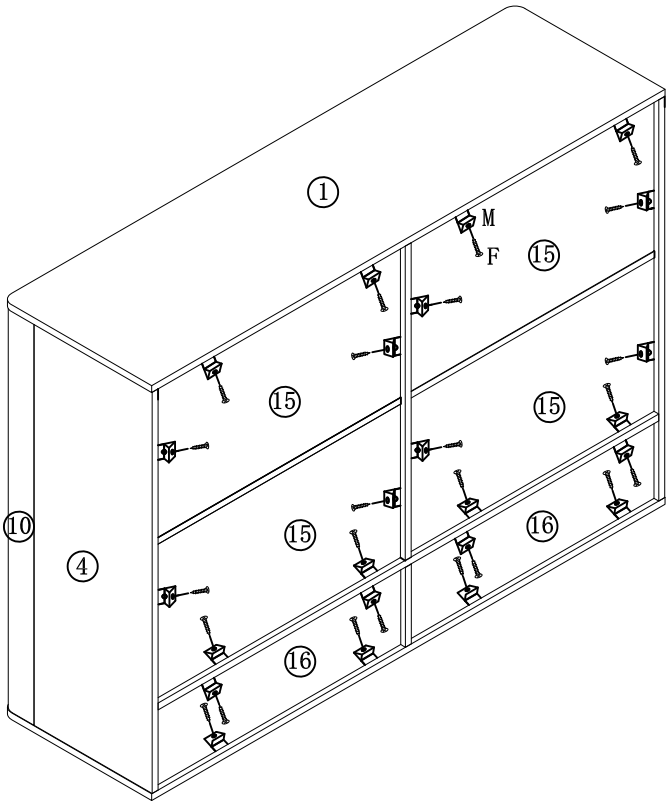

	M×24PCS
	F×24PCS

STEP 14

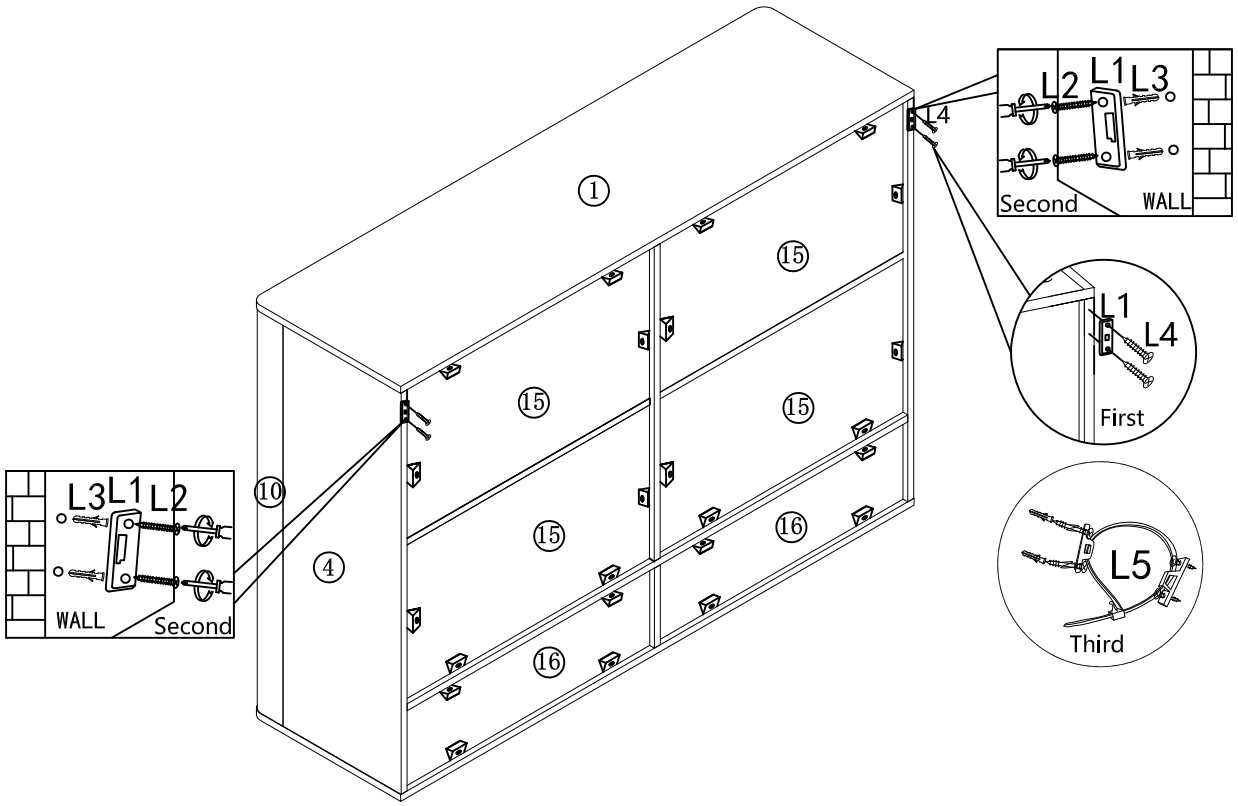

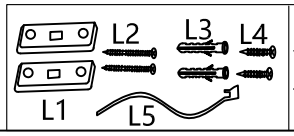	L×2PCS