ASSEMBLY INSTRUCTION

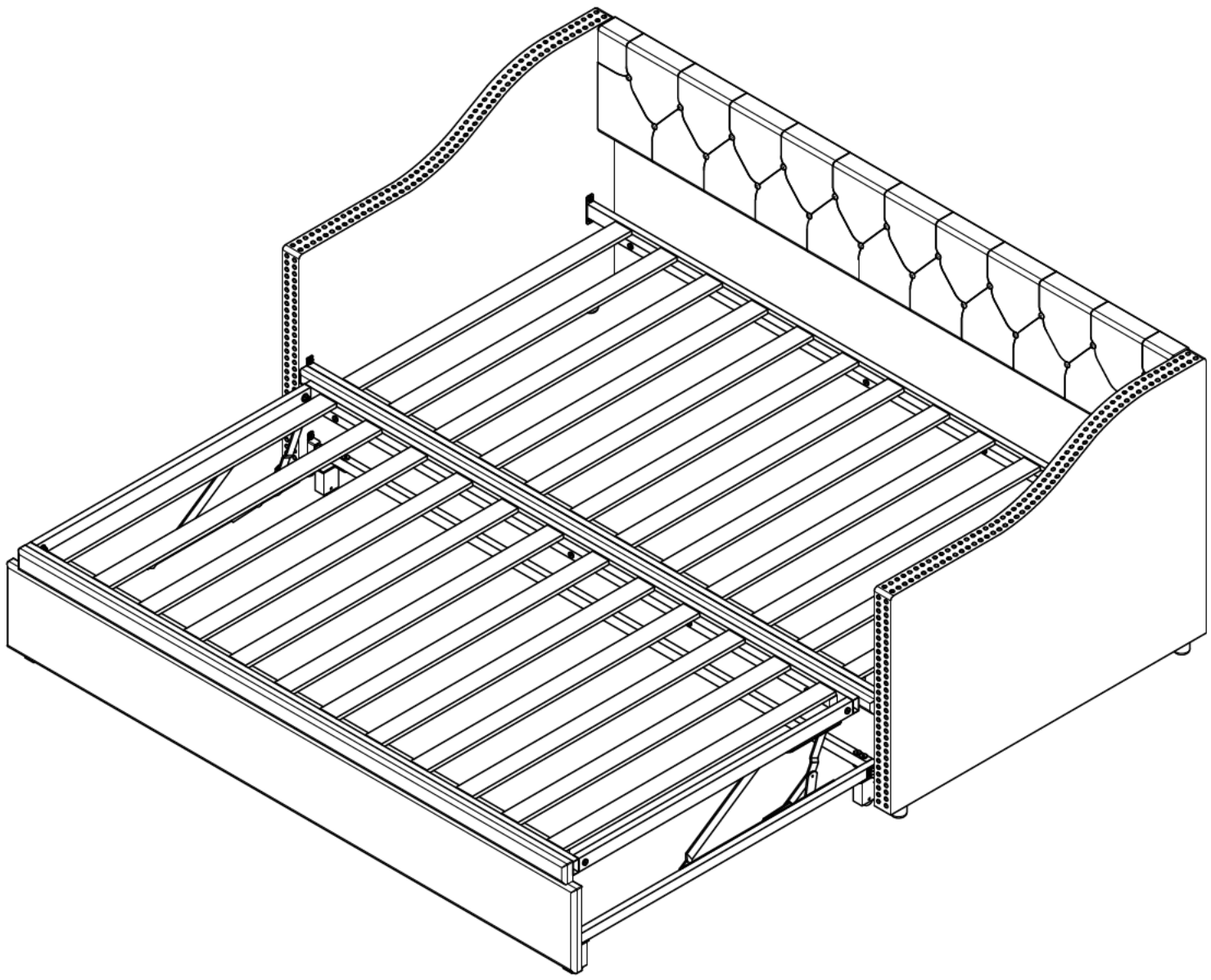

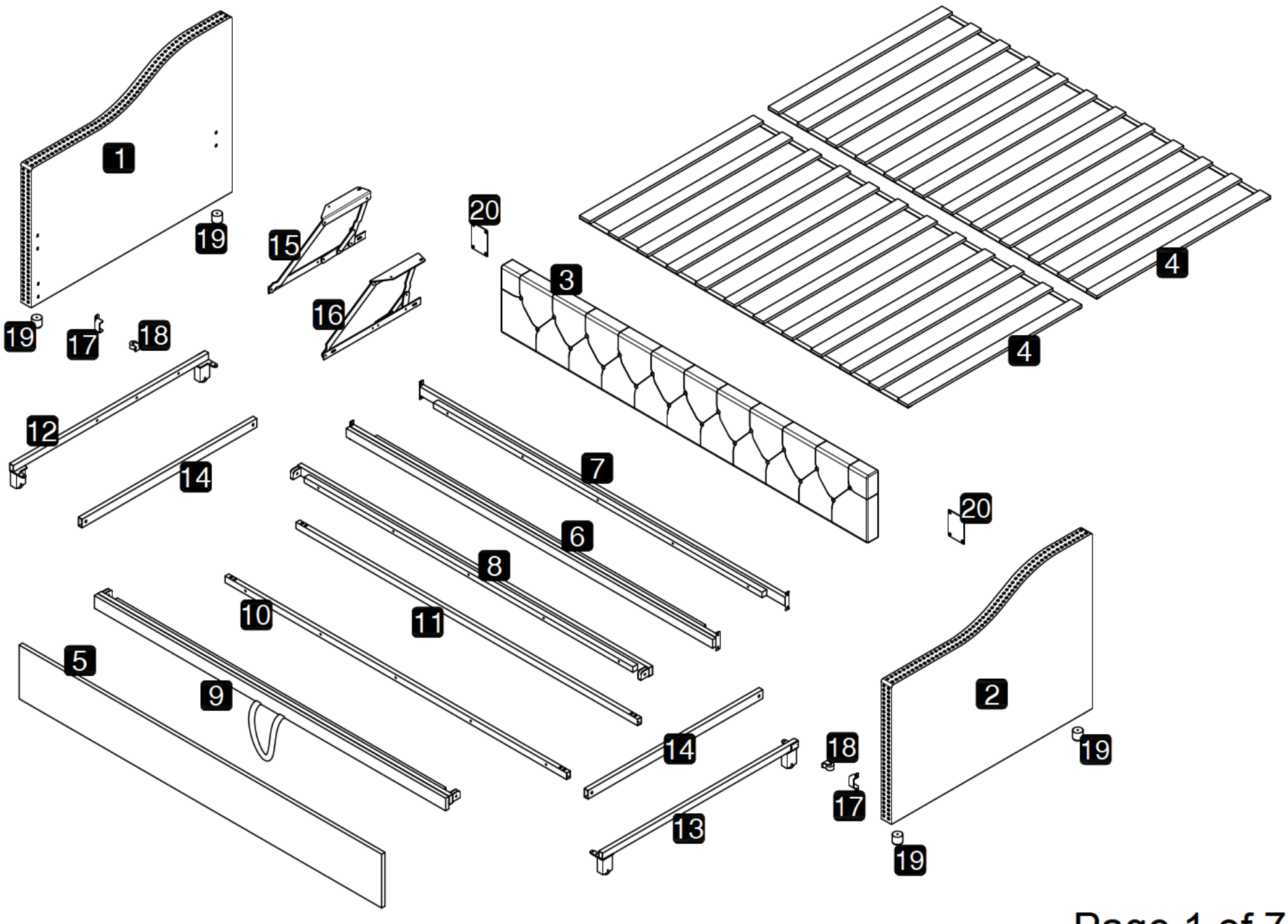

TIPS

1. Please read the instructions fully before assembly. These instructions include important information which could ensure correct assembly. We have been working on providing high quality products for you. However, in the rare instance that your product is defective, missing parts or there are some issues, please don't hesitate to contact our customer service to submit parts requirements, assembly suggestion, or warranty claims, and we will give the best solution as soon as possible. If necessary, we need you to provide some more clear pictures of the issue.
2. Insert the screws in holes and tighten the screws, but not too tight, 70%~80% is ok, finally tighten all the screws. If some issues happened that some screws can not target to the hole or some parts are difficult to install, please adjust the tightness of the screws.
3. 2 people are recommended to finish.

Part List WF319245

1 Armrest - L	2 Armrest -	4 Slats X2

Part L t WF3192

3 Backres	5 Tow bed X1	6 Front bed beam X1	7 Rear bed beam X1	8 Tow bed rear bed beam X1
9 Tow bed fro bed beam	10 Tow bed fr be X1	11 Tow bed rear pipe X1	12 Tow bed side pipe - L X1	13 Tow bed side pipe - R X1
14 Tow bed u side pipe X2	15 Lift Me - L X1	16 Lift Mechanism - R X1	17 Positioning iron sheet X2	18 Side wheel X2
19 Legs X4	20 Connecting sheet X2			

Hardw re List W 19246

A Bolts(M8x2) X20	B Bolts(M8x) X4	C Bolts(M8x40mm) X8	D Bolts(M6x35mm) X9	E Bolts(M6x16mm) X10
F Bolts (M4x X	G Flat Wash	H Non-slip nuts(M8) X4	J Allen Key X1	K Spanner X1

Step 1

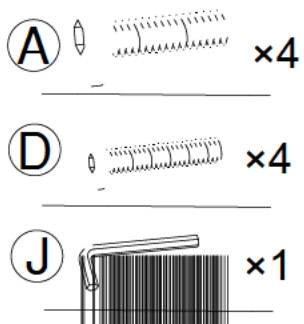

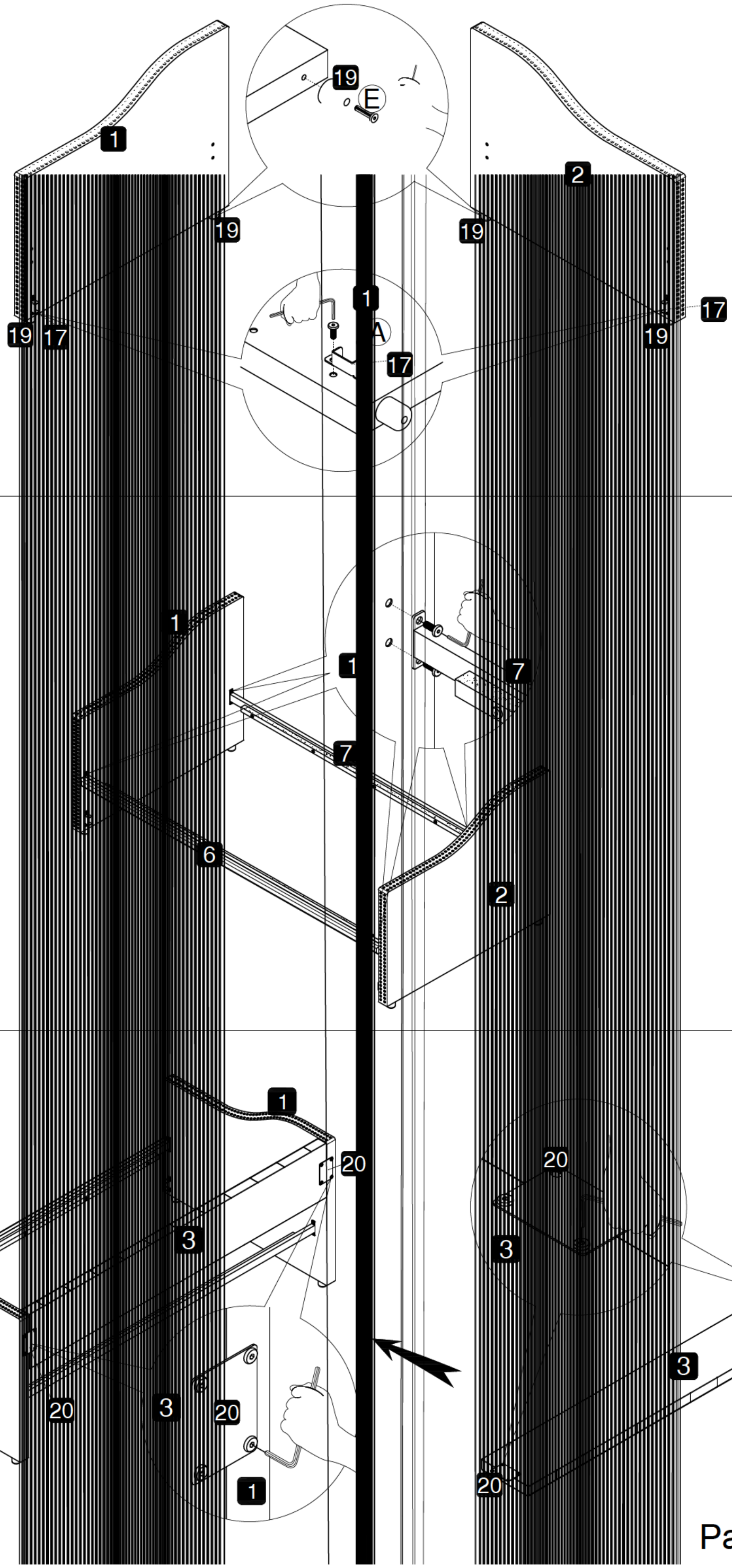

Step 2

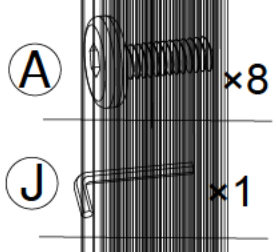

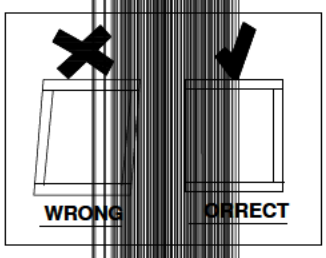

Step 3

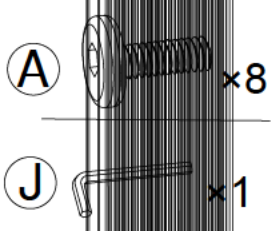

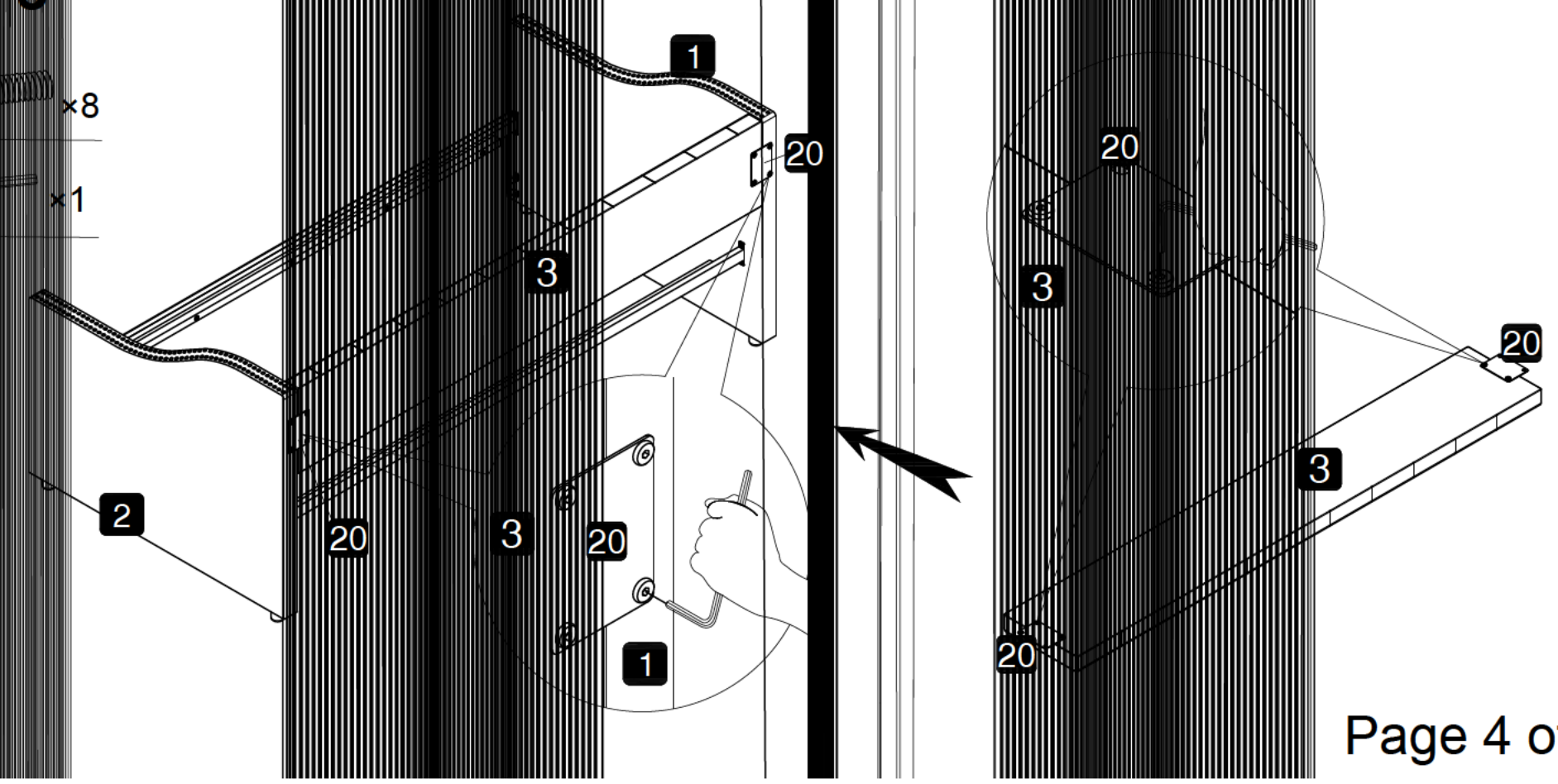

Step 4

F ×4

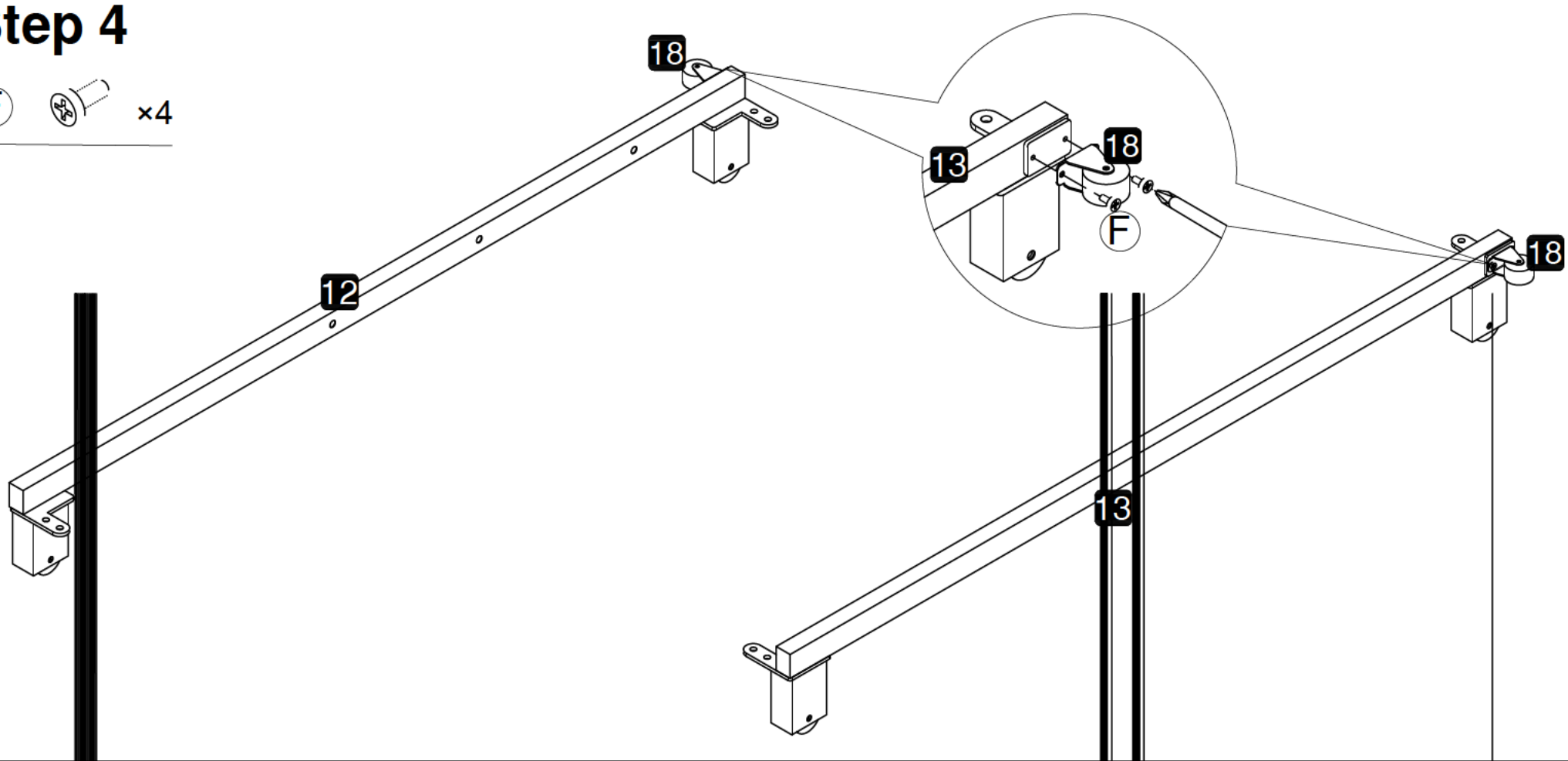

Step 5

C ×8

J ×1

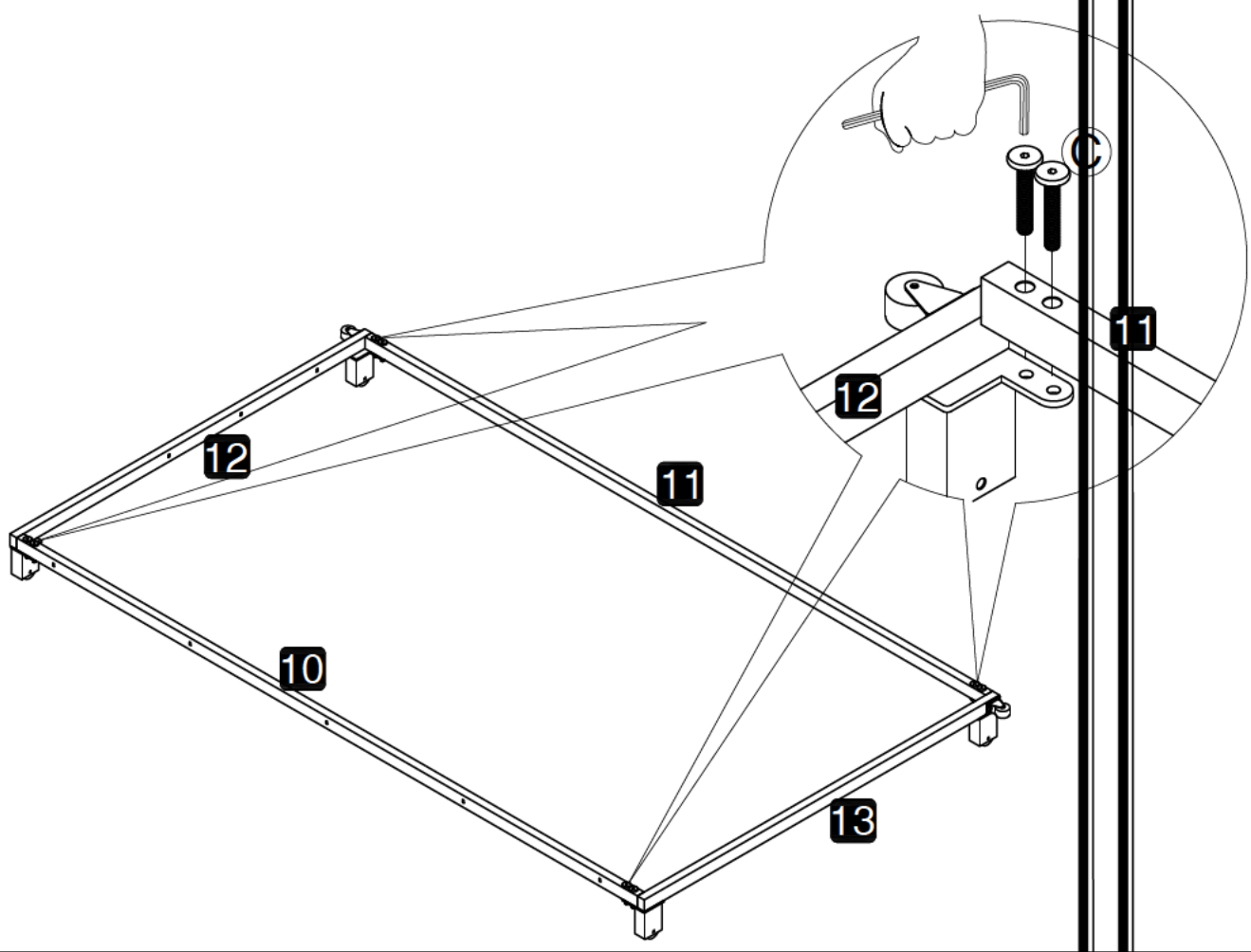

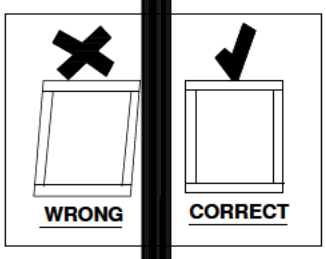

Step 6

E ×6

J ×1

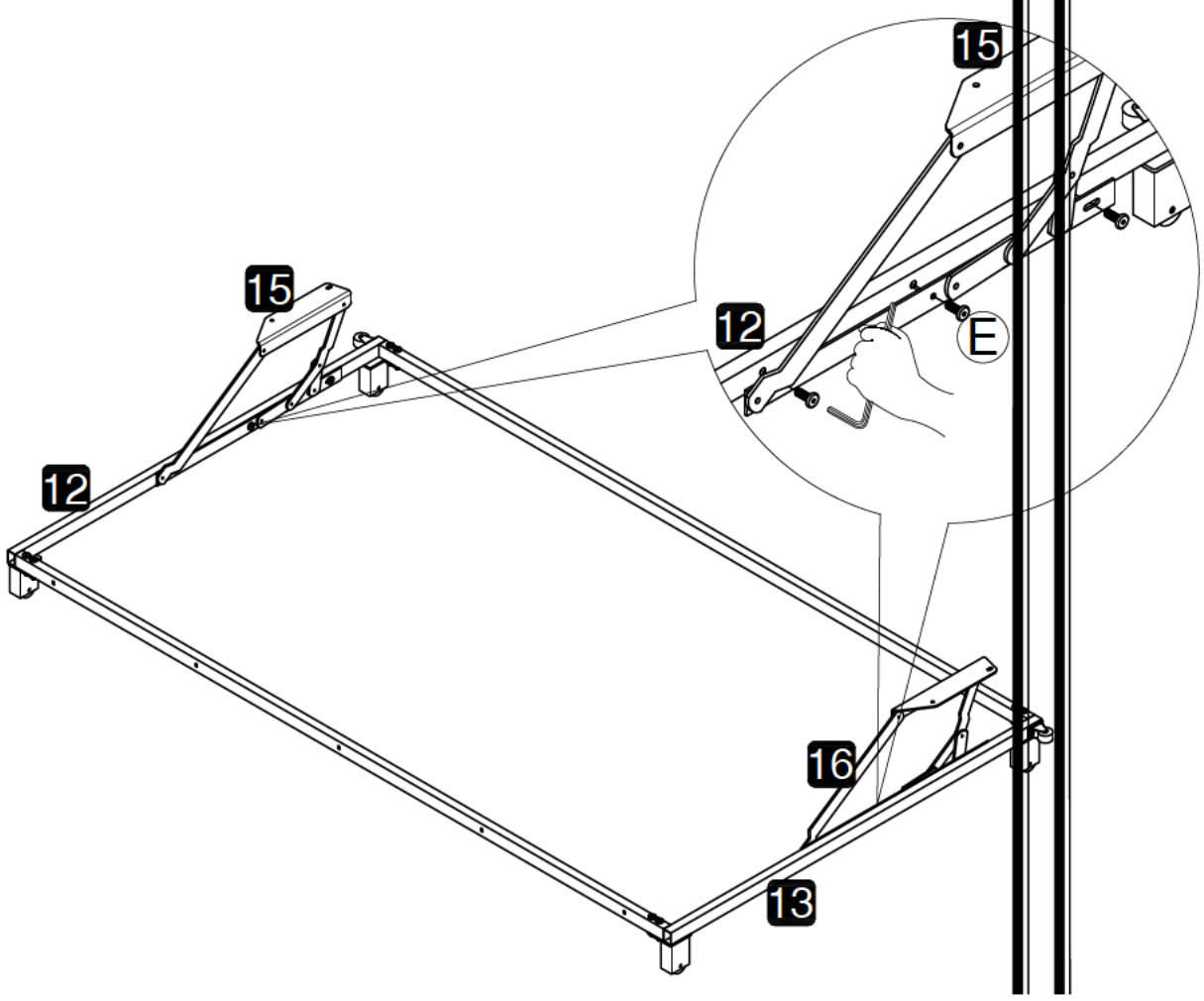

Step 7

D ×5

J ×1

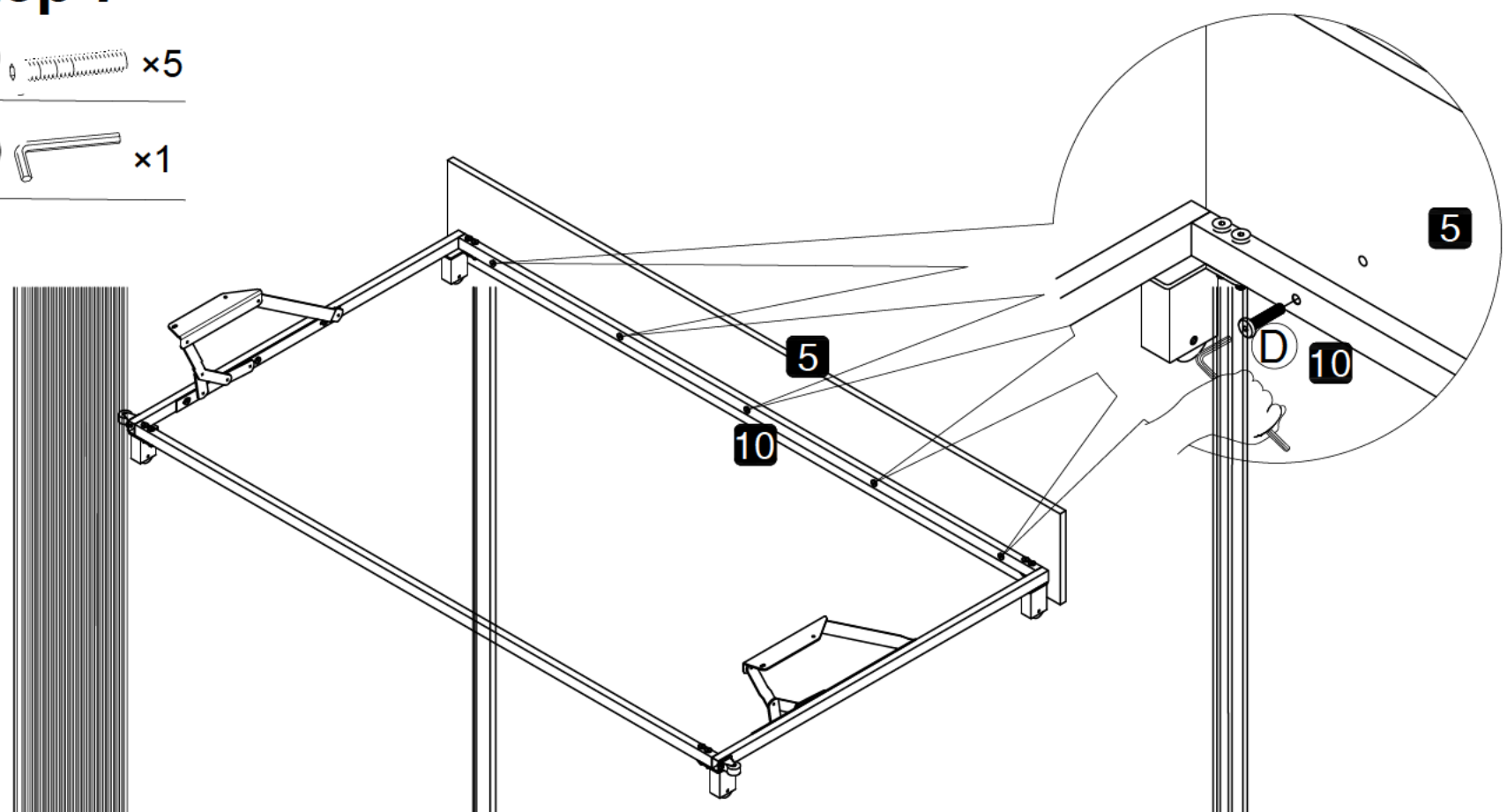

Step 8

B ×4

G ×4

H ×4

J ×1

K ×1

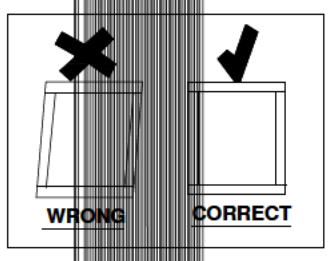

Note the position of the rear bed beam (8) of the traction bed and the front bed beam (9) of the traction bed, as shown in the figure: The rear bed bed beam (8) of the traction bed is located at the screw hole end of the front tube (14) of the traction bed.
(Beachten Sie die Position des hinteren Bettbalkens (8) des Traktionsbettes und des vorderen Bettbalkens (9) des Traktionsbettes, wie in der Abbildung gezeigt: Der hintere Bettbalken (8) des Traktionsbettes befindet sich am Schraubenlochende des Vorderrohrs (14) des Traktionsbettes.)

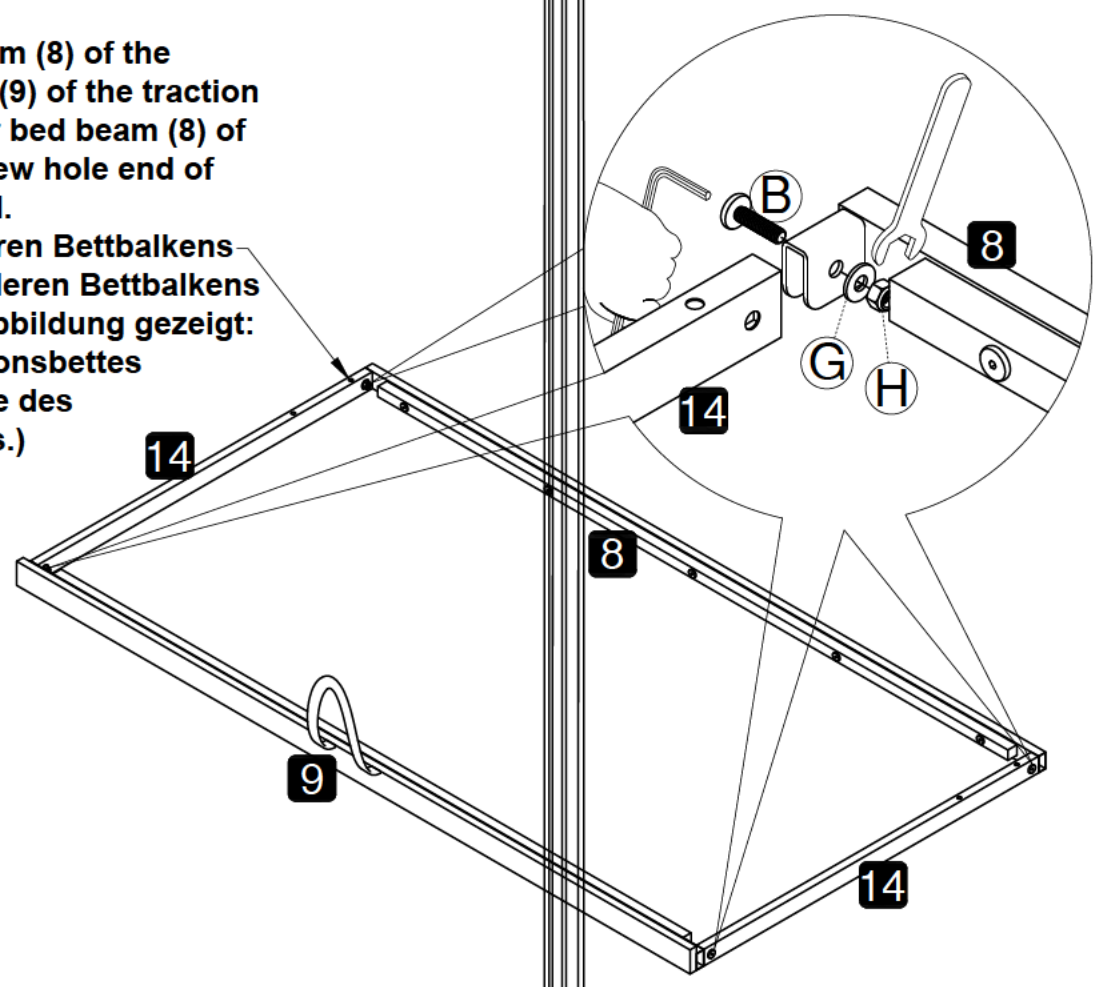

Step 9

E ×4

J ×1

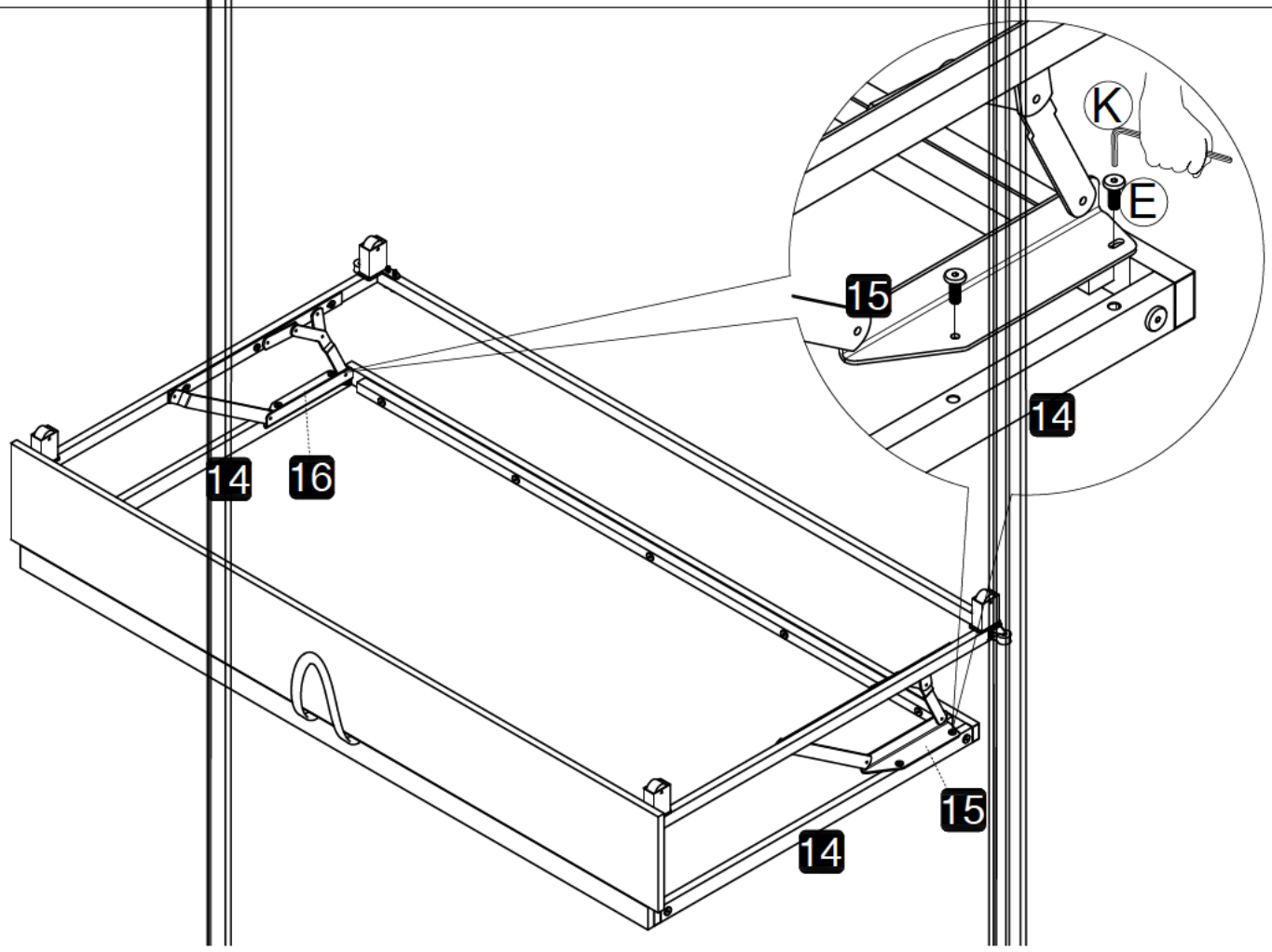

Step 10

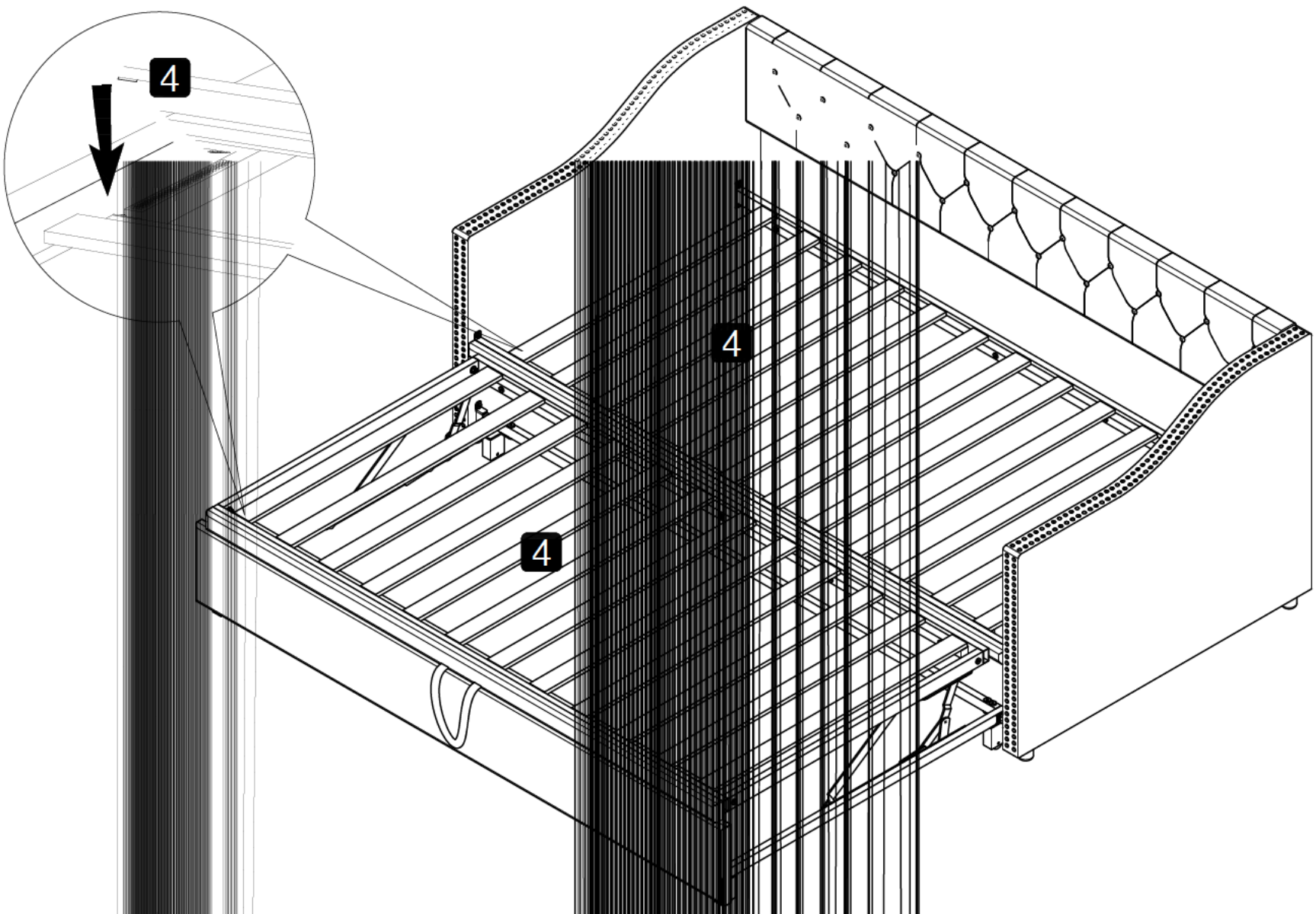
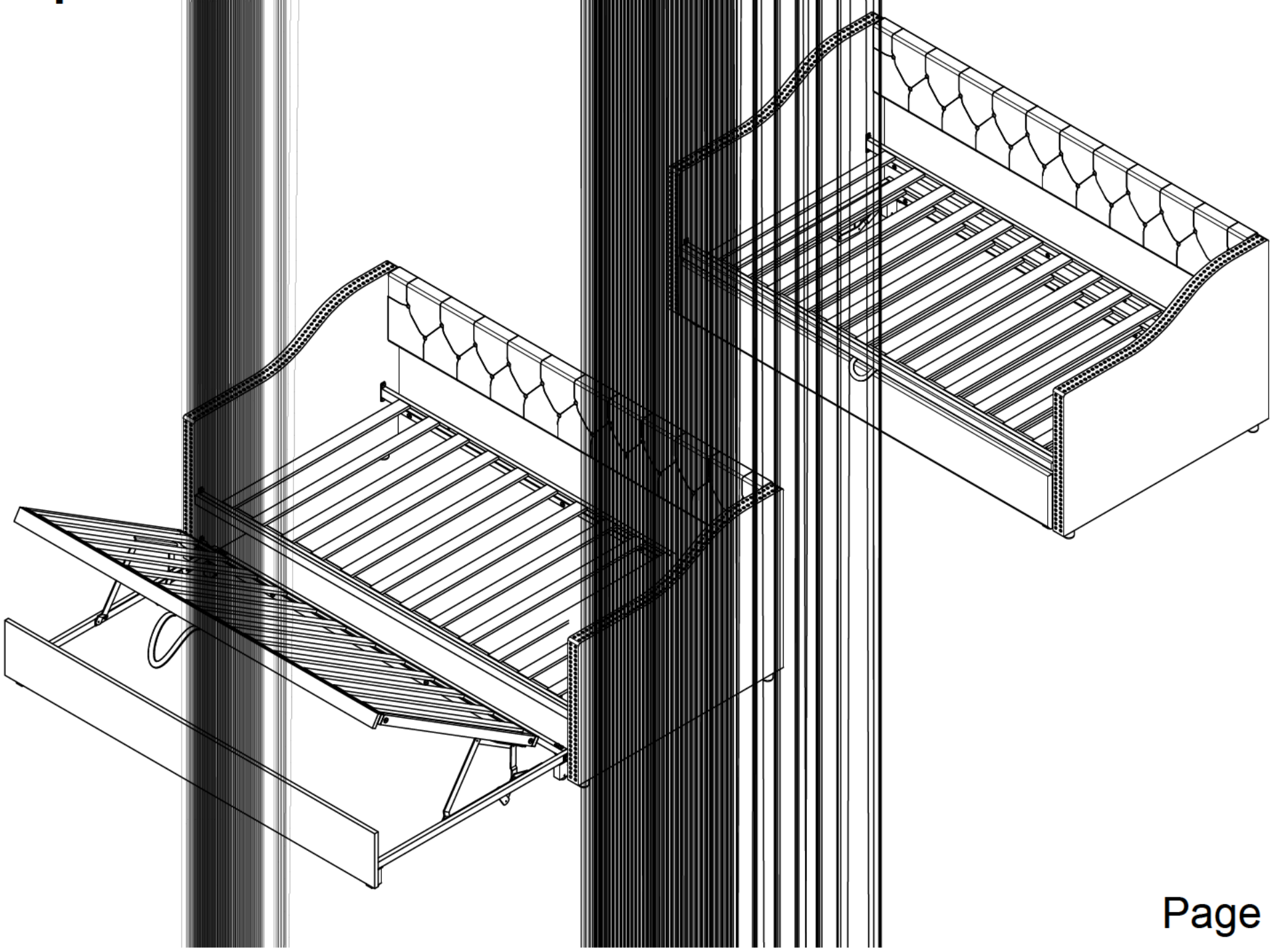
Step 11