Instruction Manual

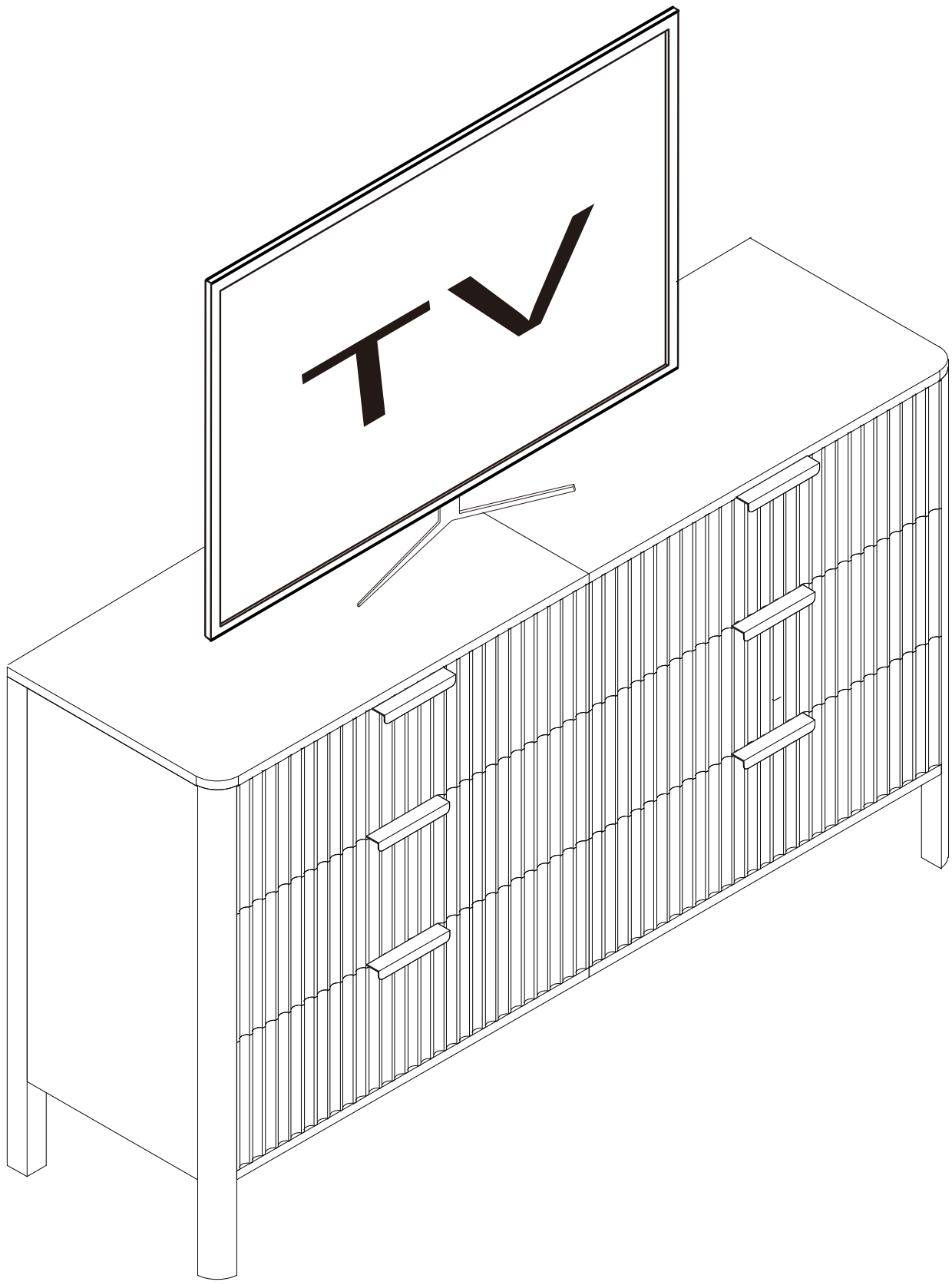

Contact Us

Should you encounter any issues or have any inquiries while using our product, please feel free to reach out to our customer service team. We are dedicated to providing you with support and assistance.

Important Notes:

- Carefully remove all parts from the box and place them individually on a flat surface to prevent scratches or other damage.
- Follow these assembly and installation instructions strictly to ensure the product is assembled as intended.

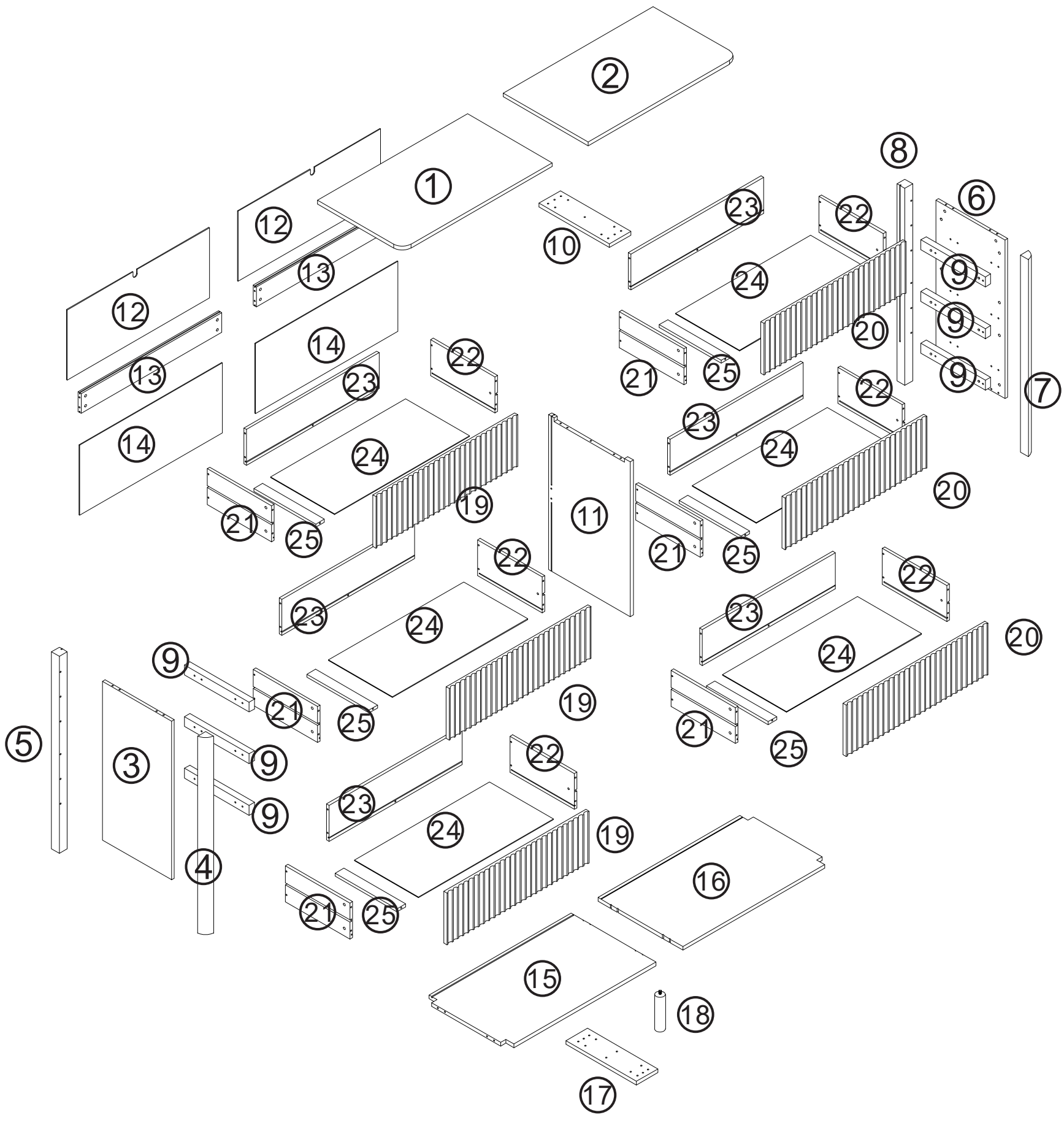

① 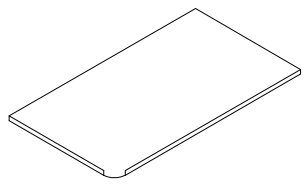 x1	② 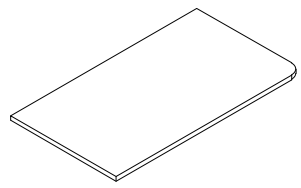 x1	③ 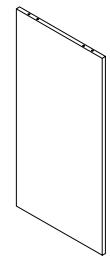 x1	④ x1	⑤ x1
⑥ 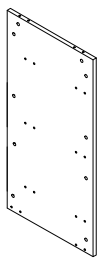 x1	⑦ x1	⑧ x1	⑨ 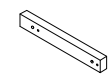 x6	⑩ 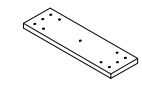 x1
⑪ 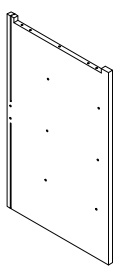 x1	⑫ 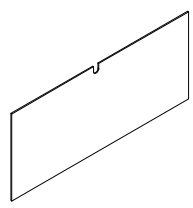 x2	⑬ 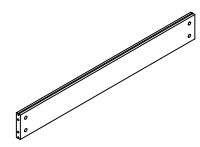 x2	⑭ 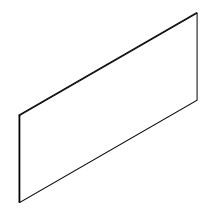 x2	⑮ 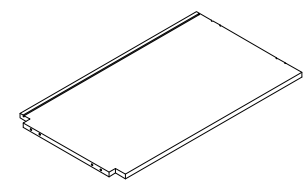 x1
⑯ 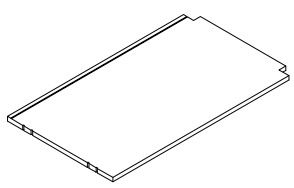 x1	⑰ 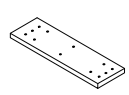 x1	⑱ x1	⑲ 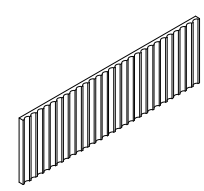 x3	⑳ 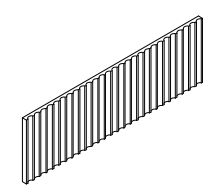 x3
㉑ 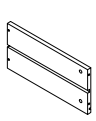 x6	㉒ 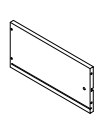 x6	㉓ 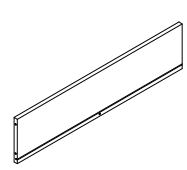 x6	㉔ 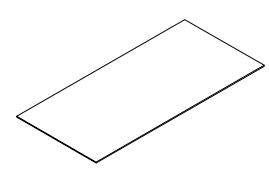 x6	㉕ 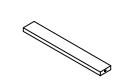 x6

Hardware accessories list

Ax62	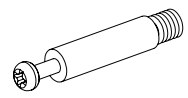 Bx62	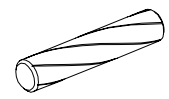 Cx32	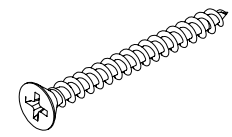 Dx2	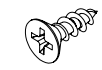 Ex24	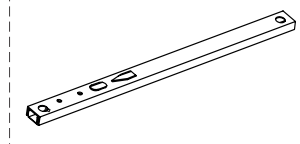 Fx12
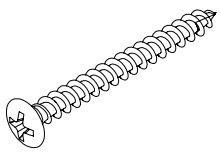 Gx4	Hx2	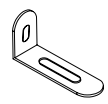 Ix2	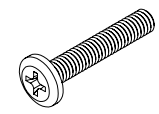 Jx4	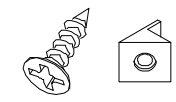 Kx16	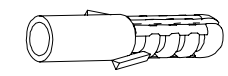 Lx2
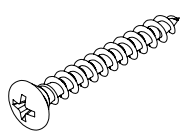 Mx44	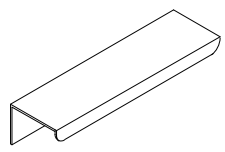 Nx6	Ox12	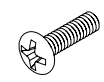 Px12	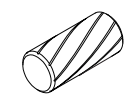 Qx8	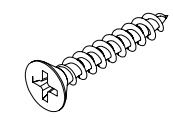 Rx6
Sx4					

NOTED:

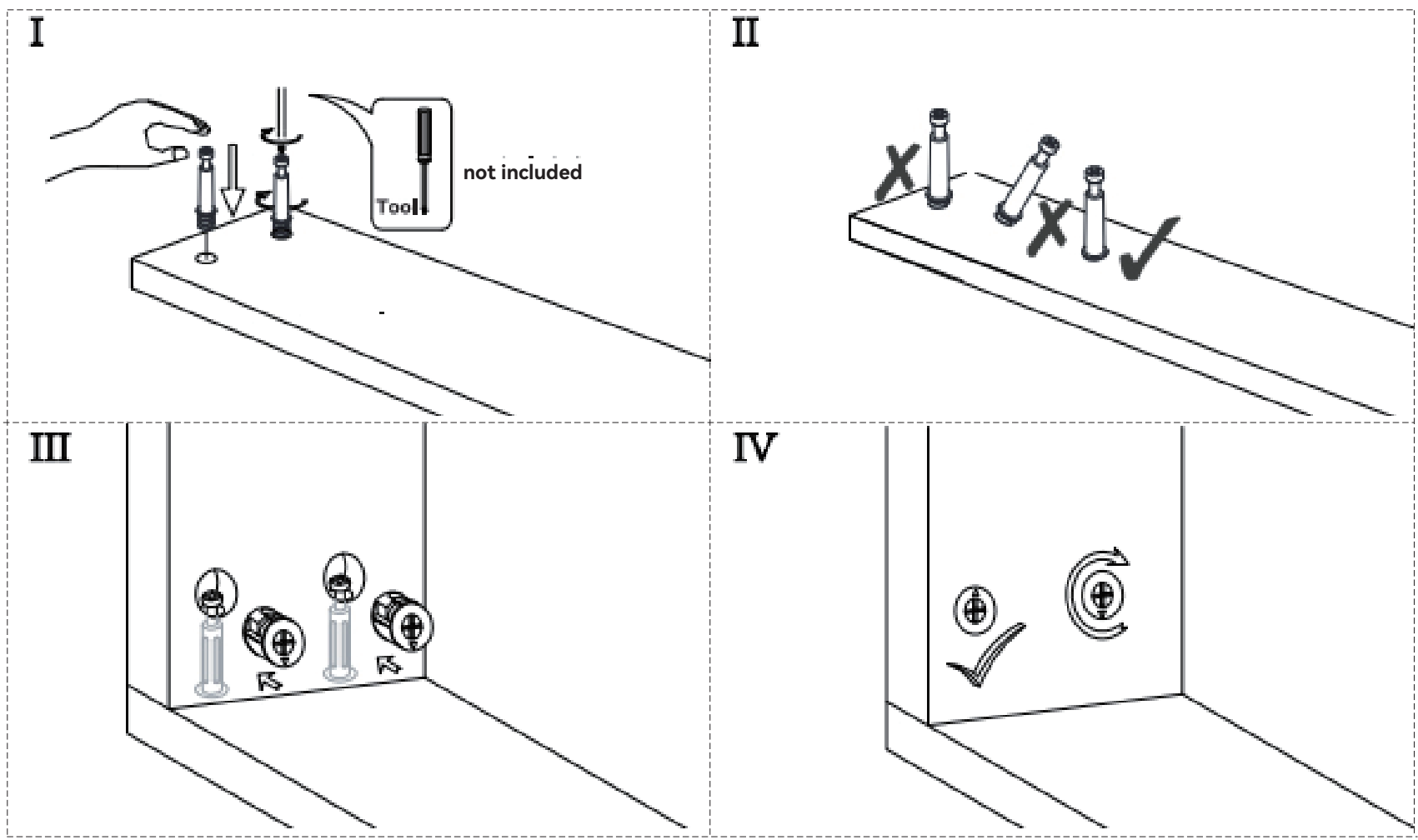

Step 1

	Bx8

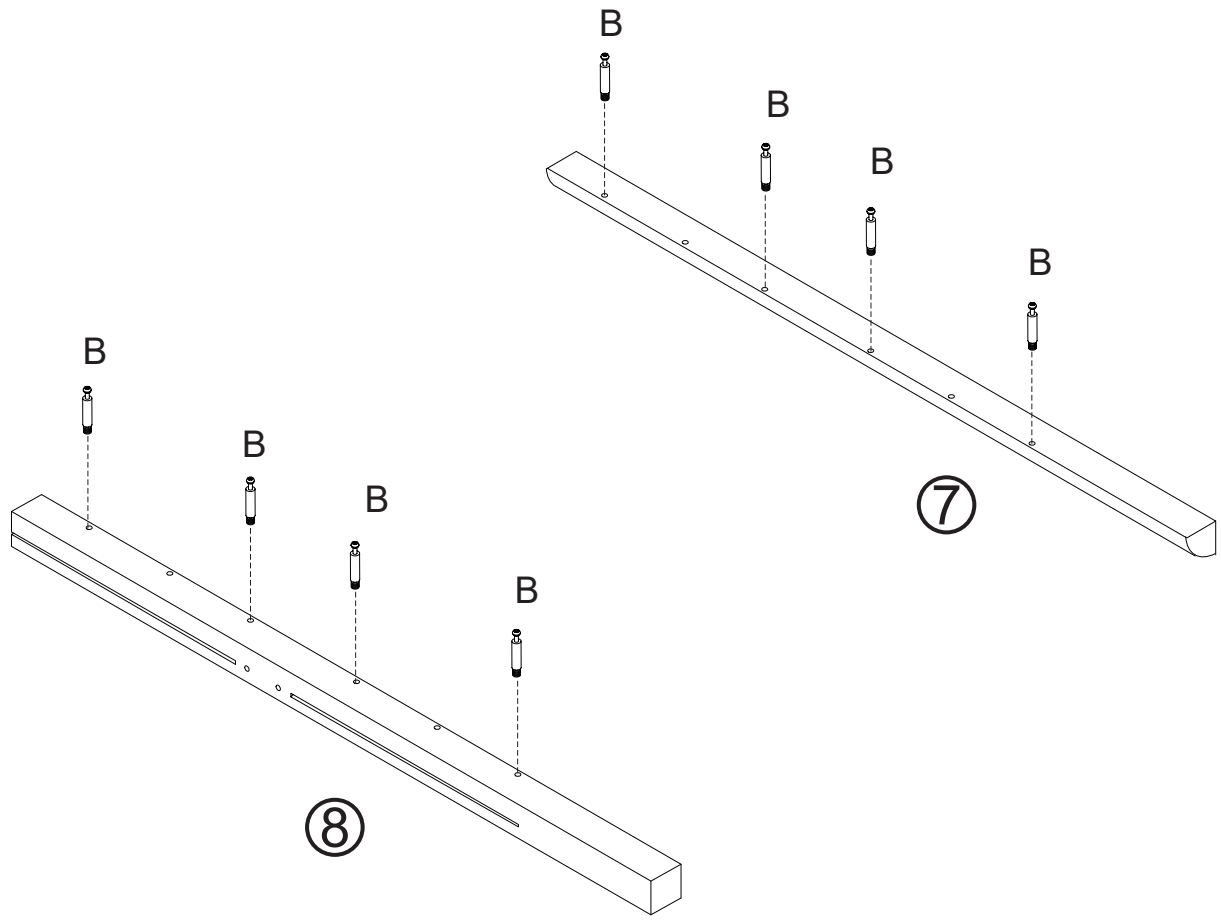

Step 2

	Ax8
	Cx4

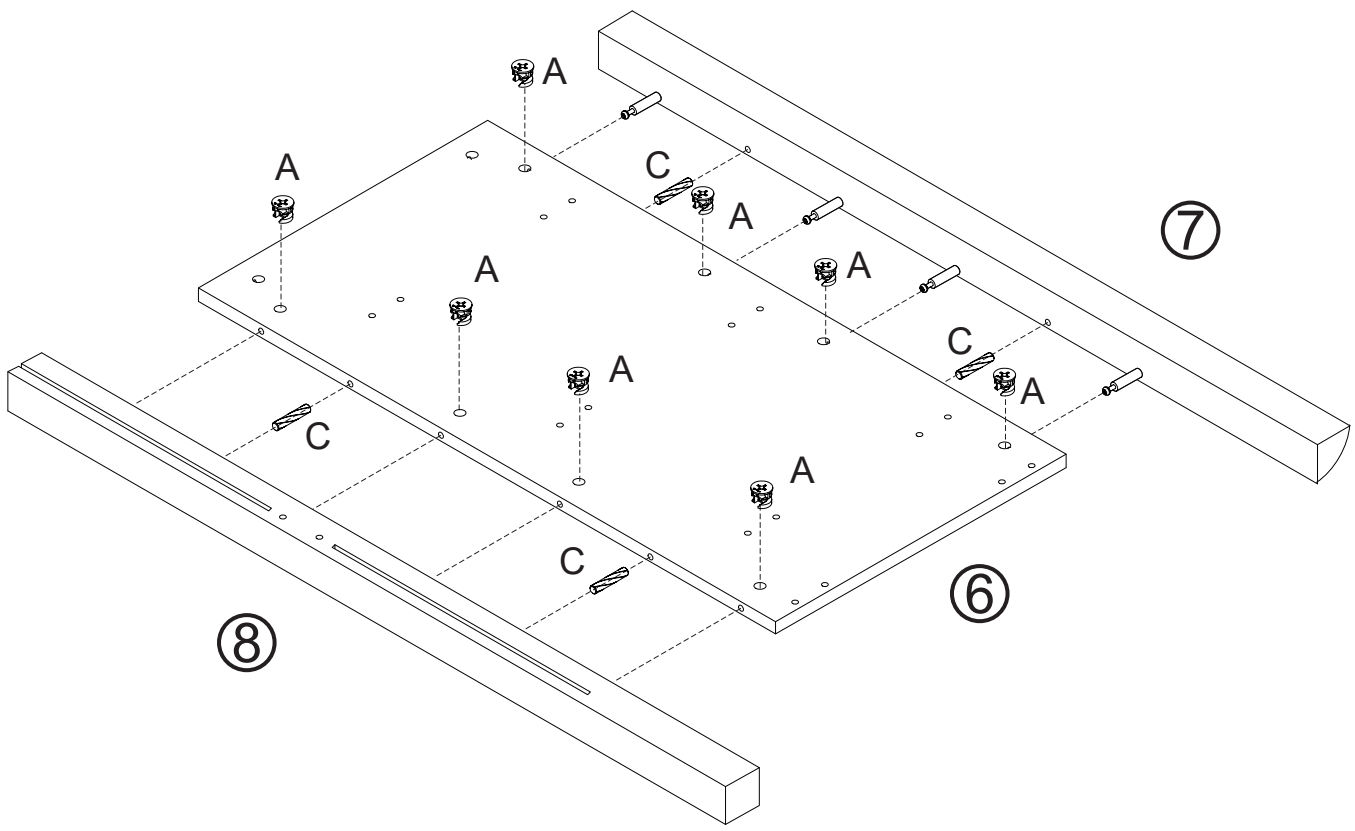

Step 3

	Cx6
	Mx6

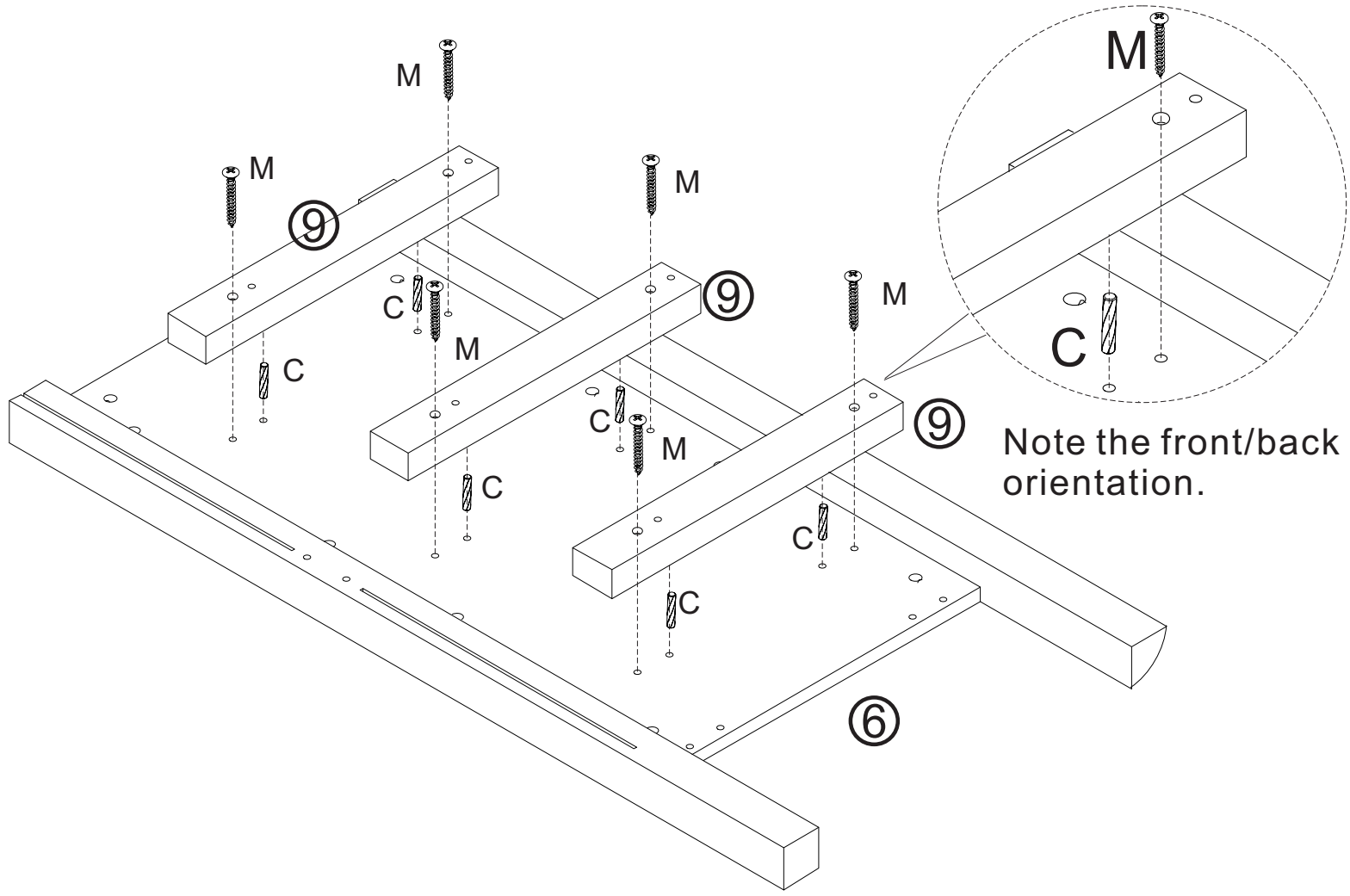

Step 4

	Ex3
	Fx3

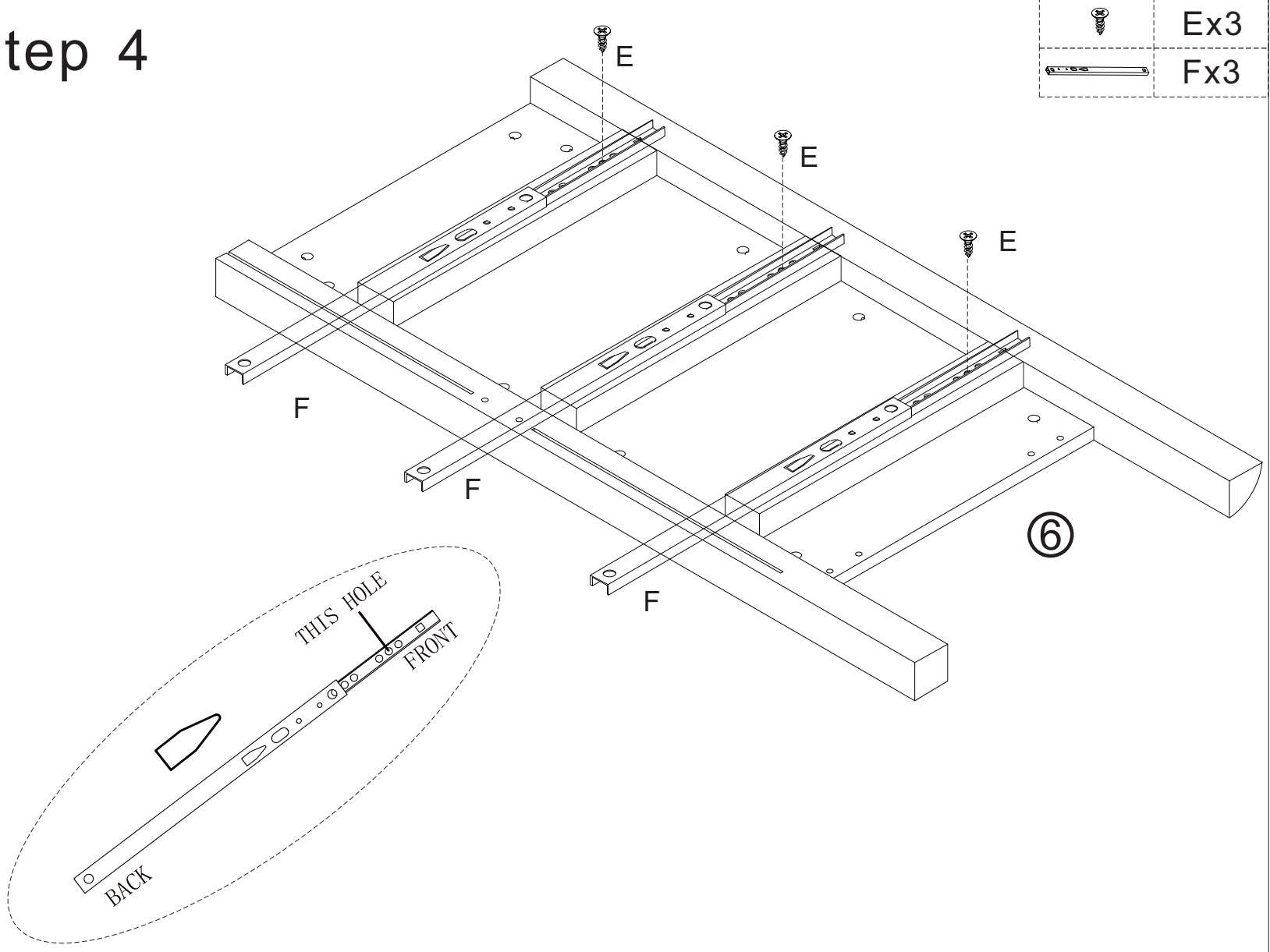

Step 5

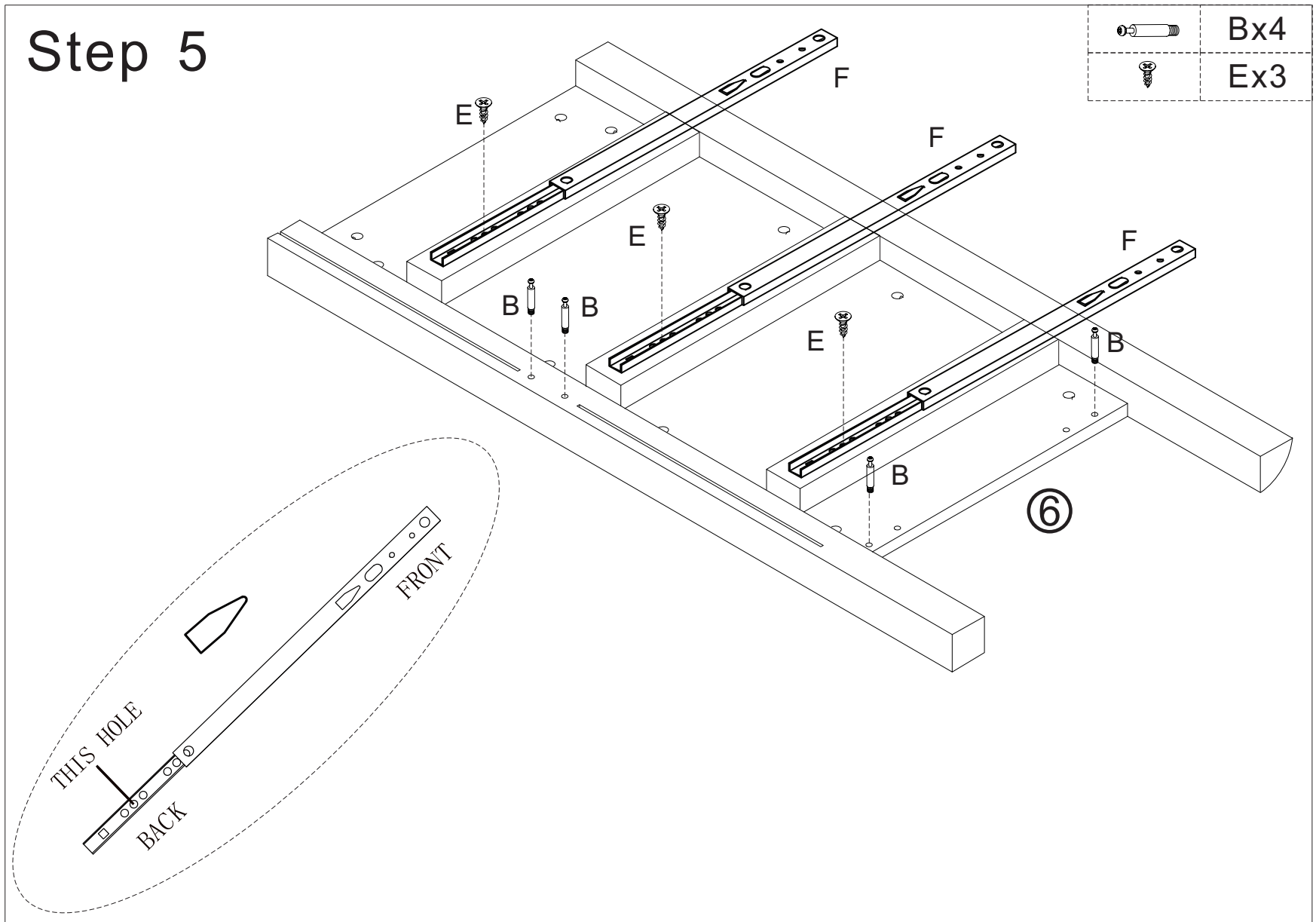

Step 6

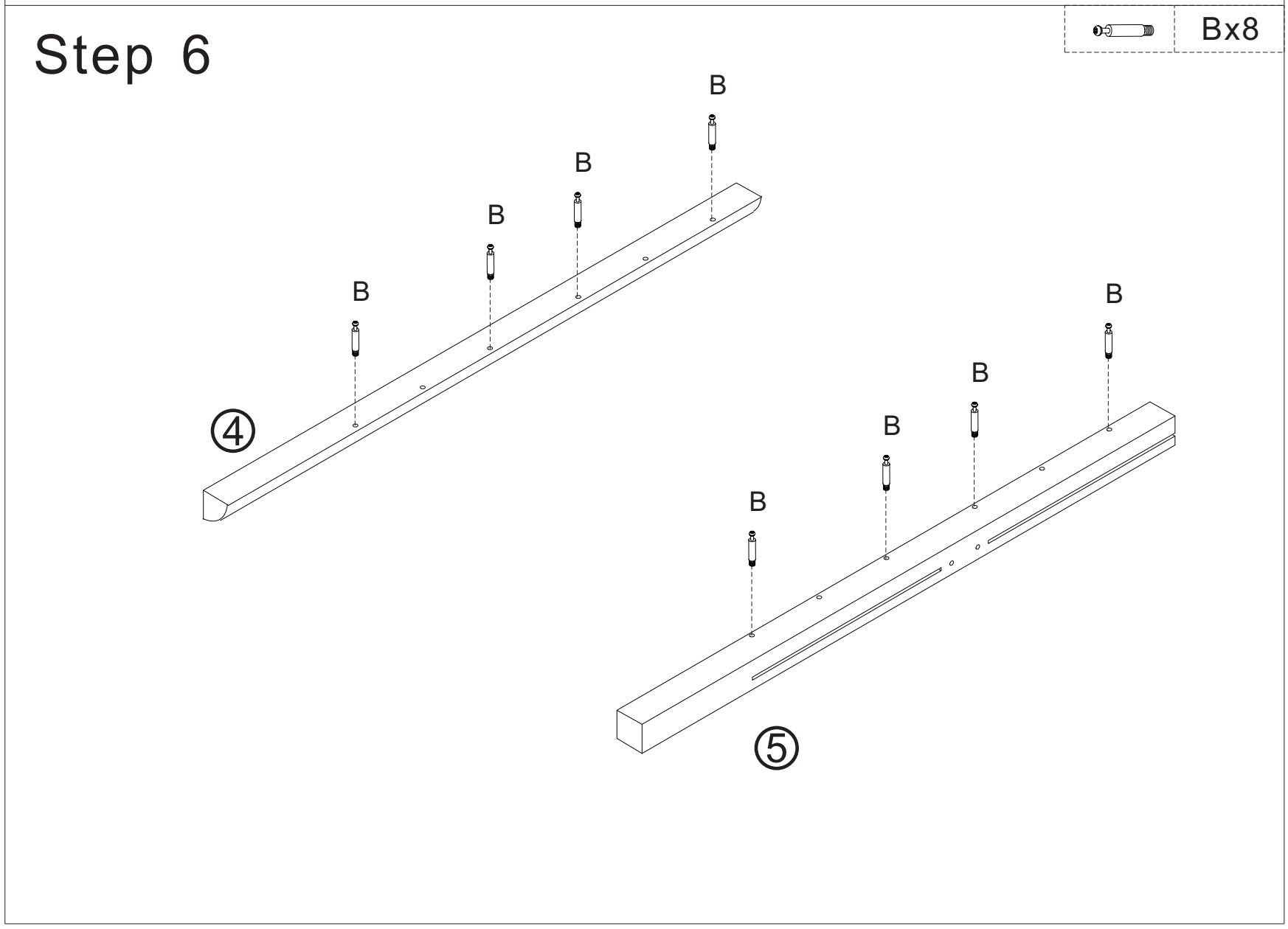

Step 7

	Ax8
	Cx4

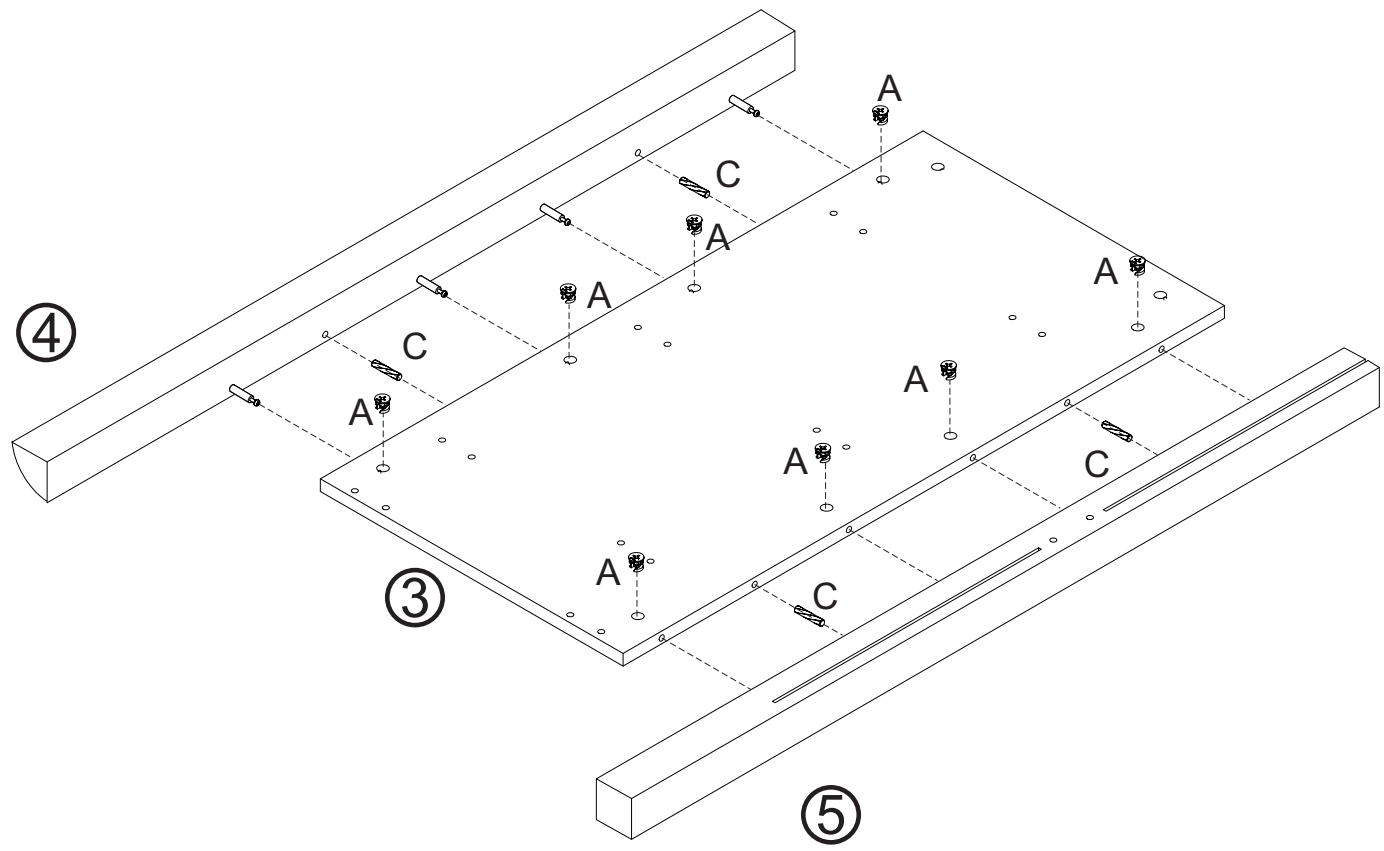

Step 8

	Cx6
	Mx6

Note the front/back orientation.

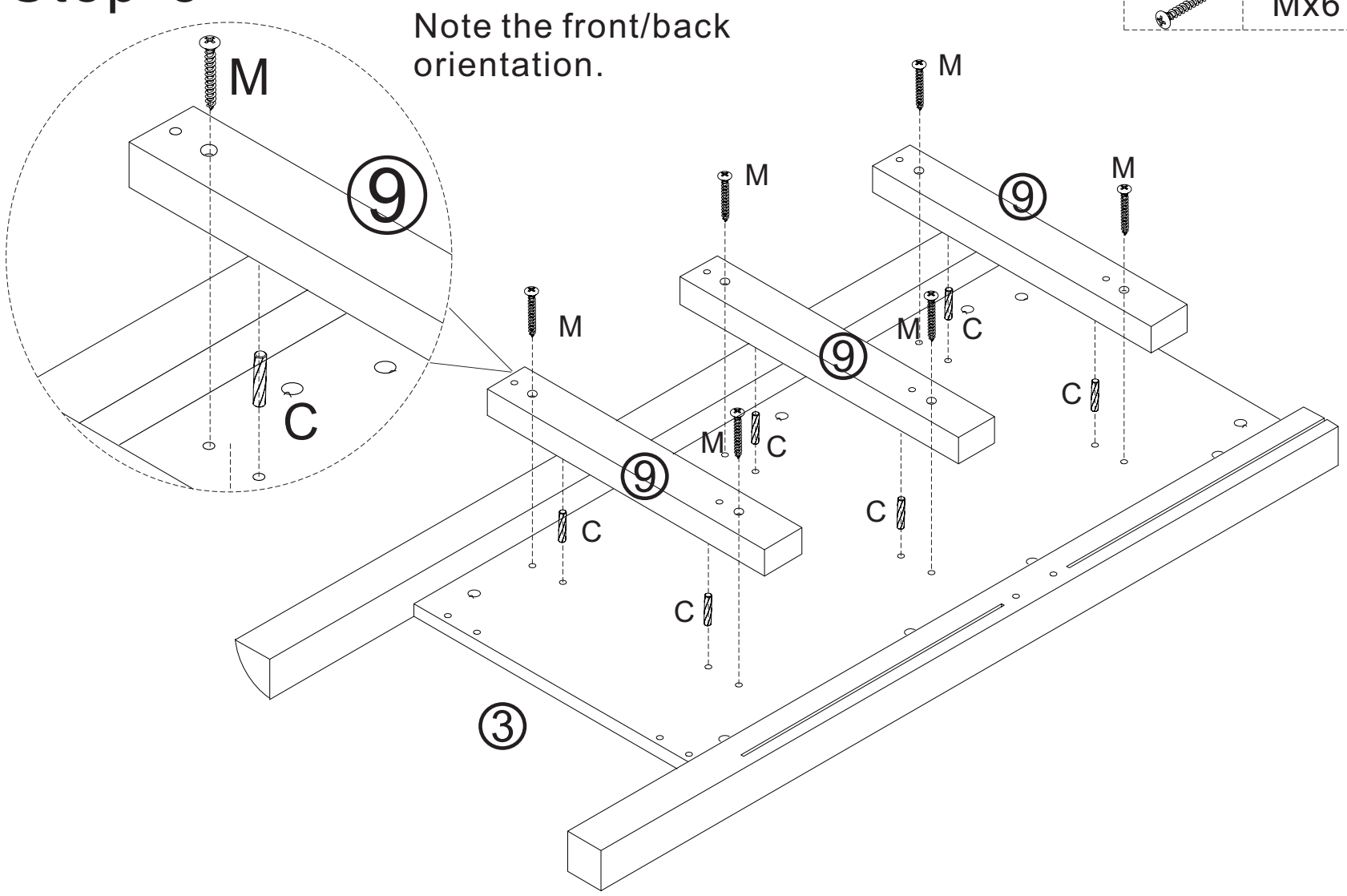

Step 9

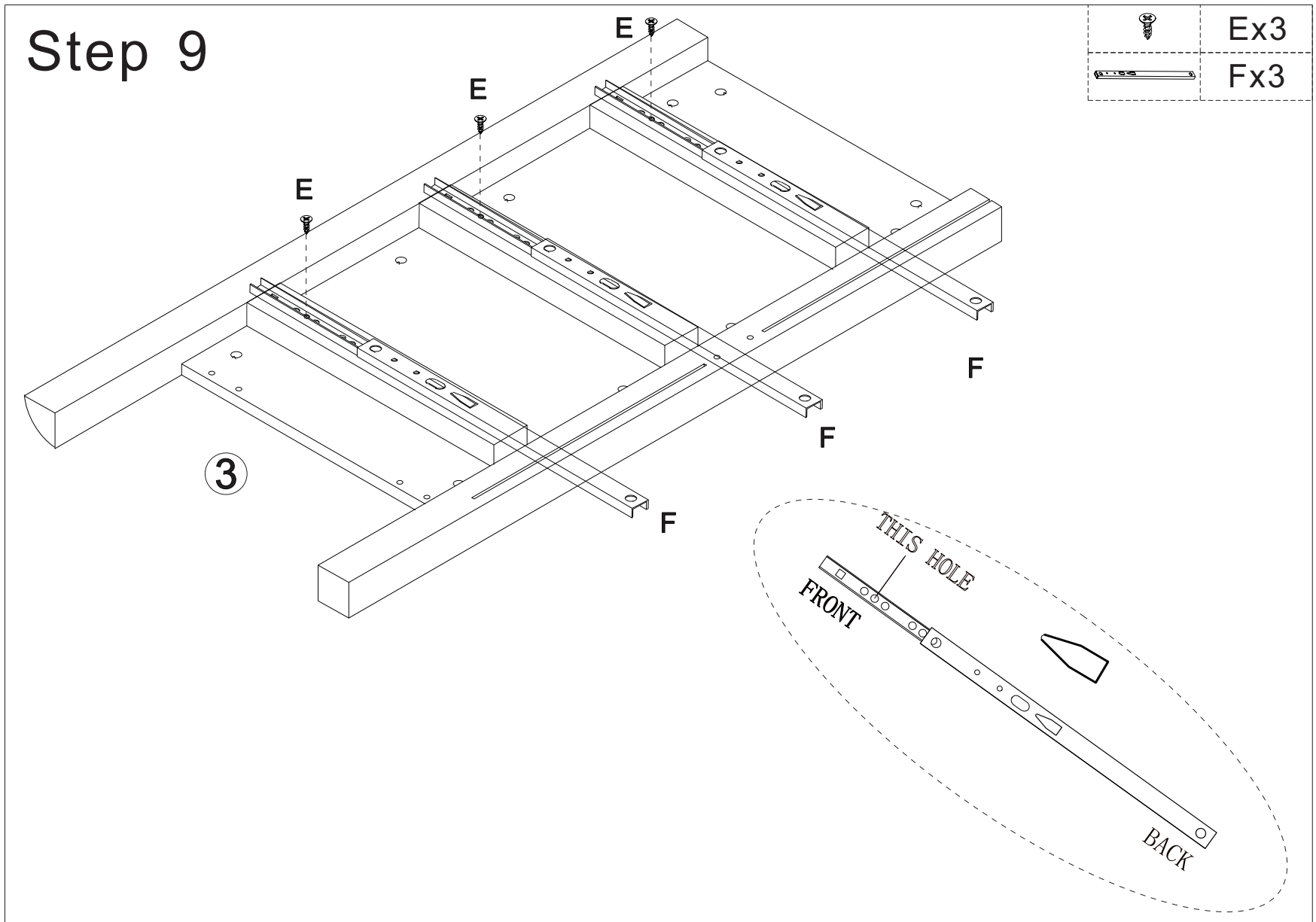

Step 10

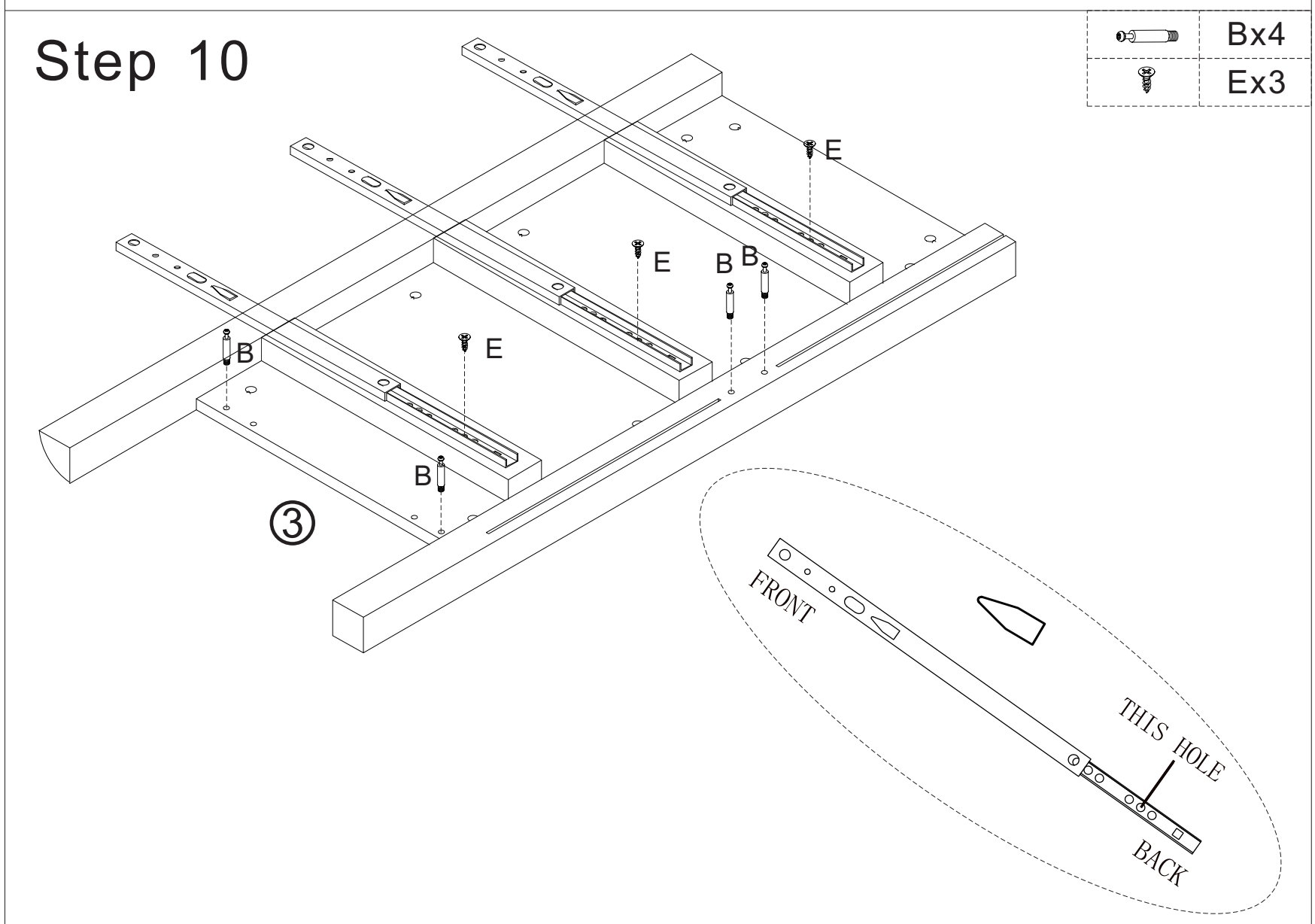

Step 11

	Ex3
	Fx3

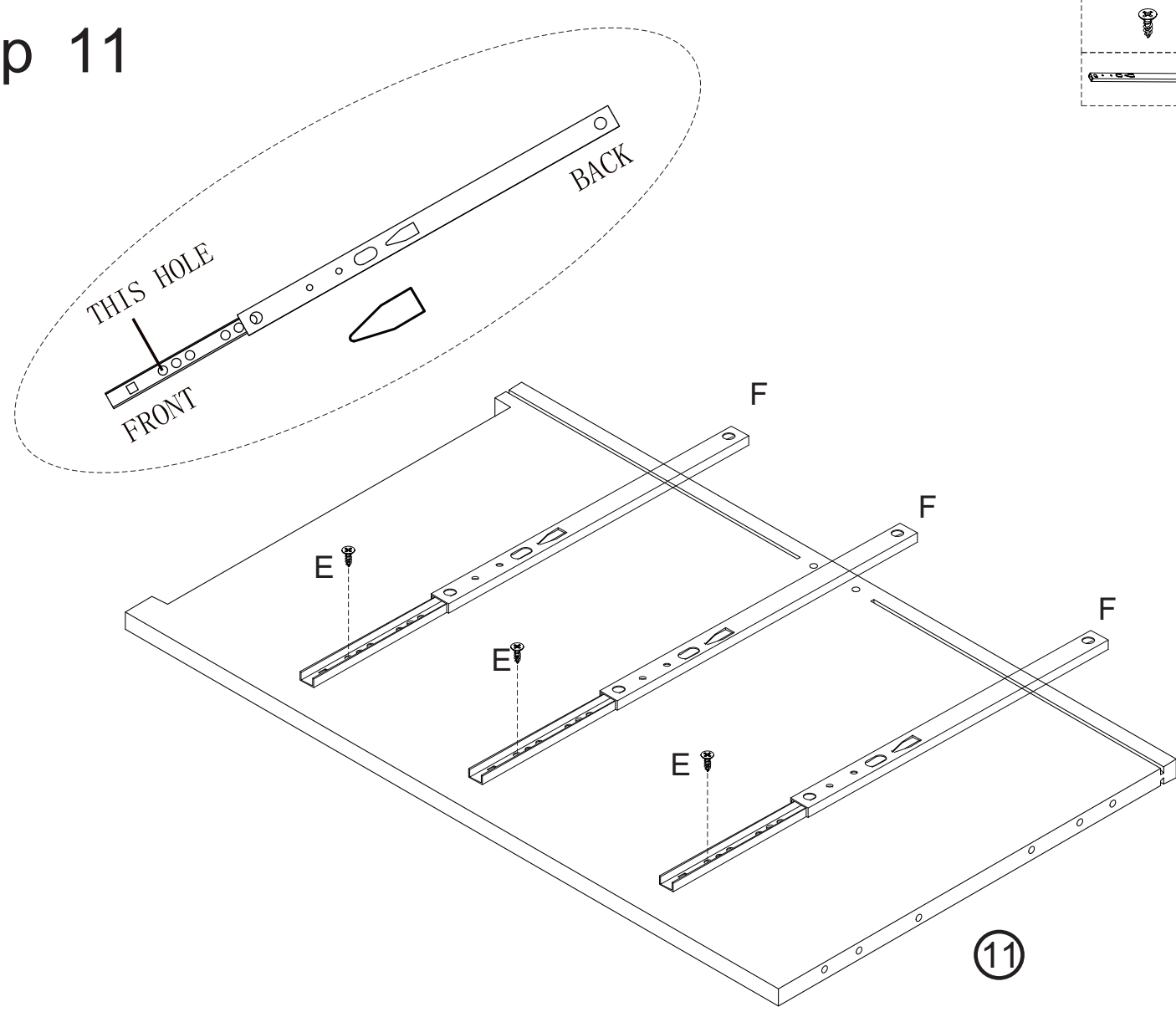

Step 12

	Bx2
	Ex3

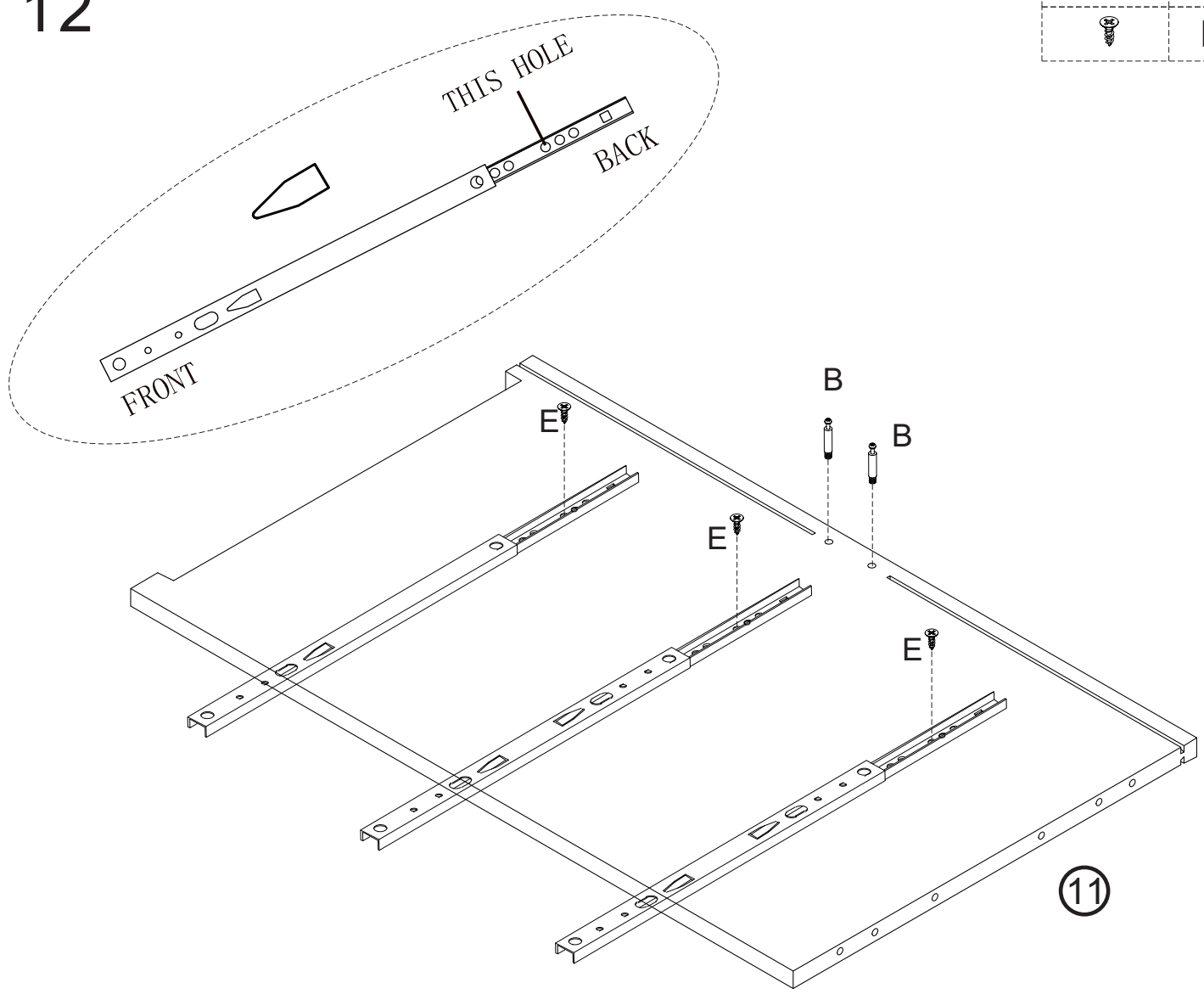

Step 13

	Ex3
	Fx3

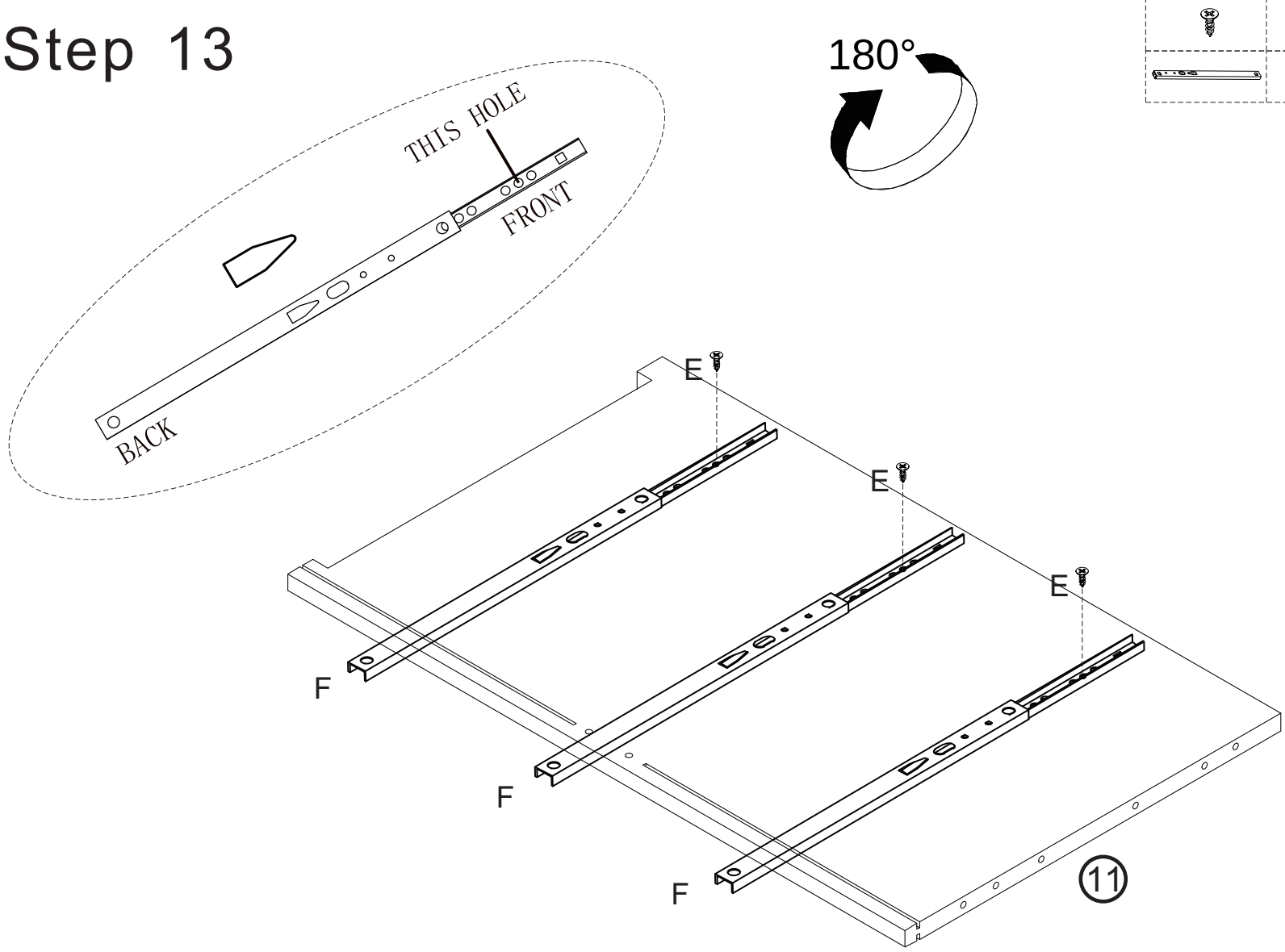

Step 14

	Bx2
	Ex3

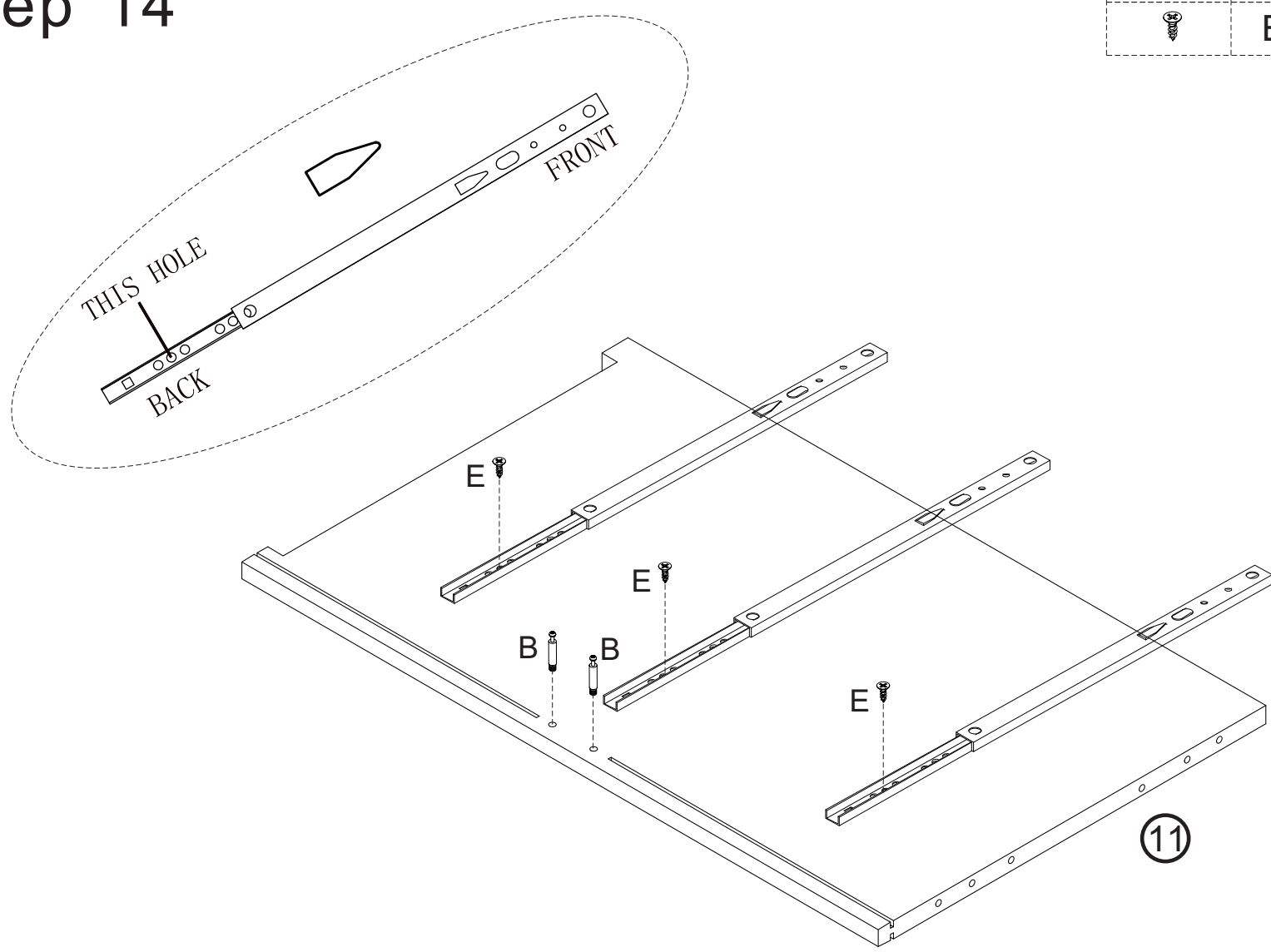

Step 15

	Cx2
	Dx2

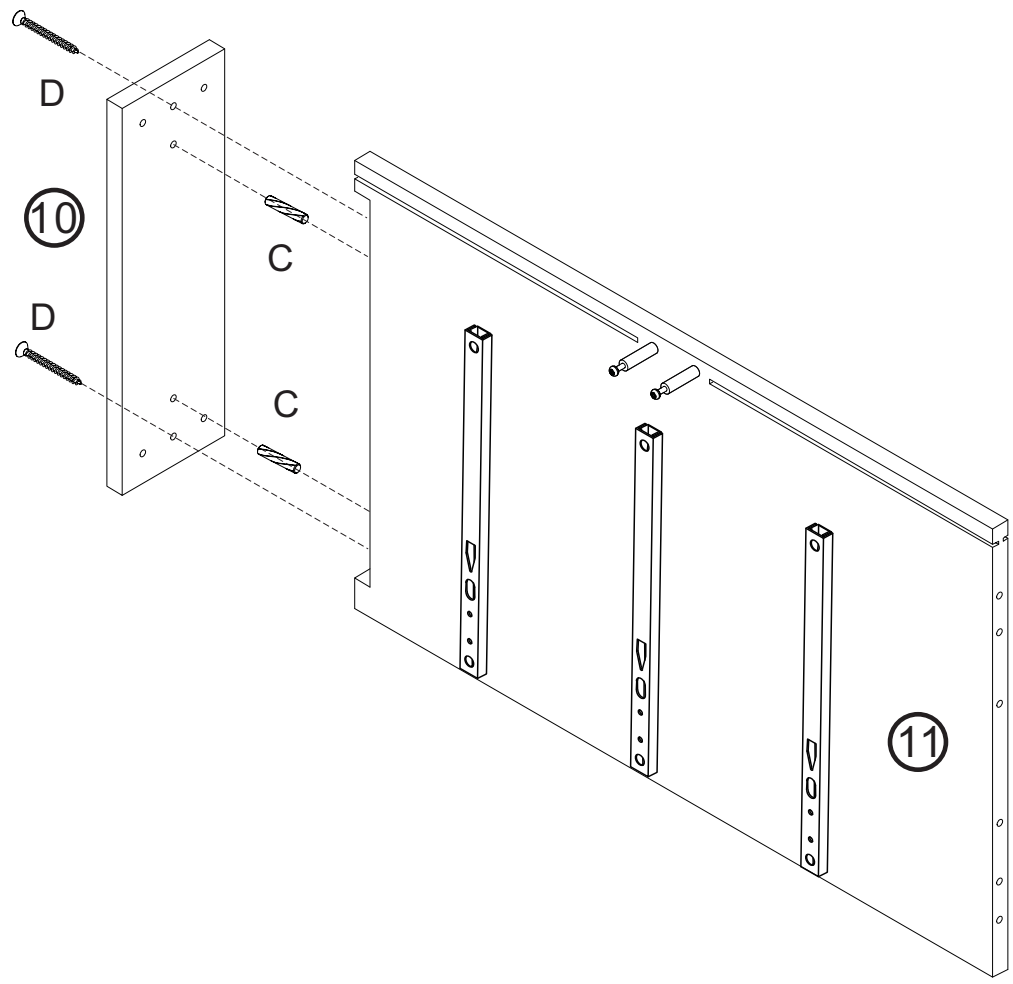

Step 16

	Qx4
	Rx6

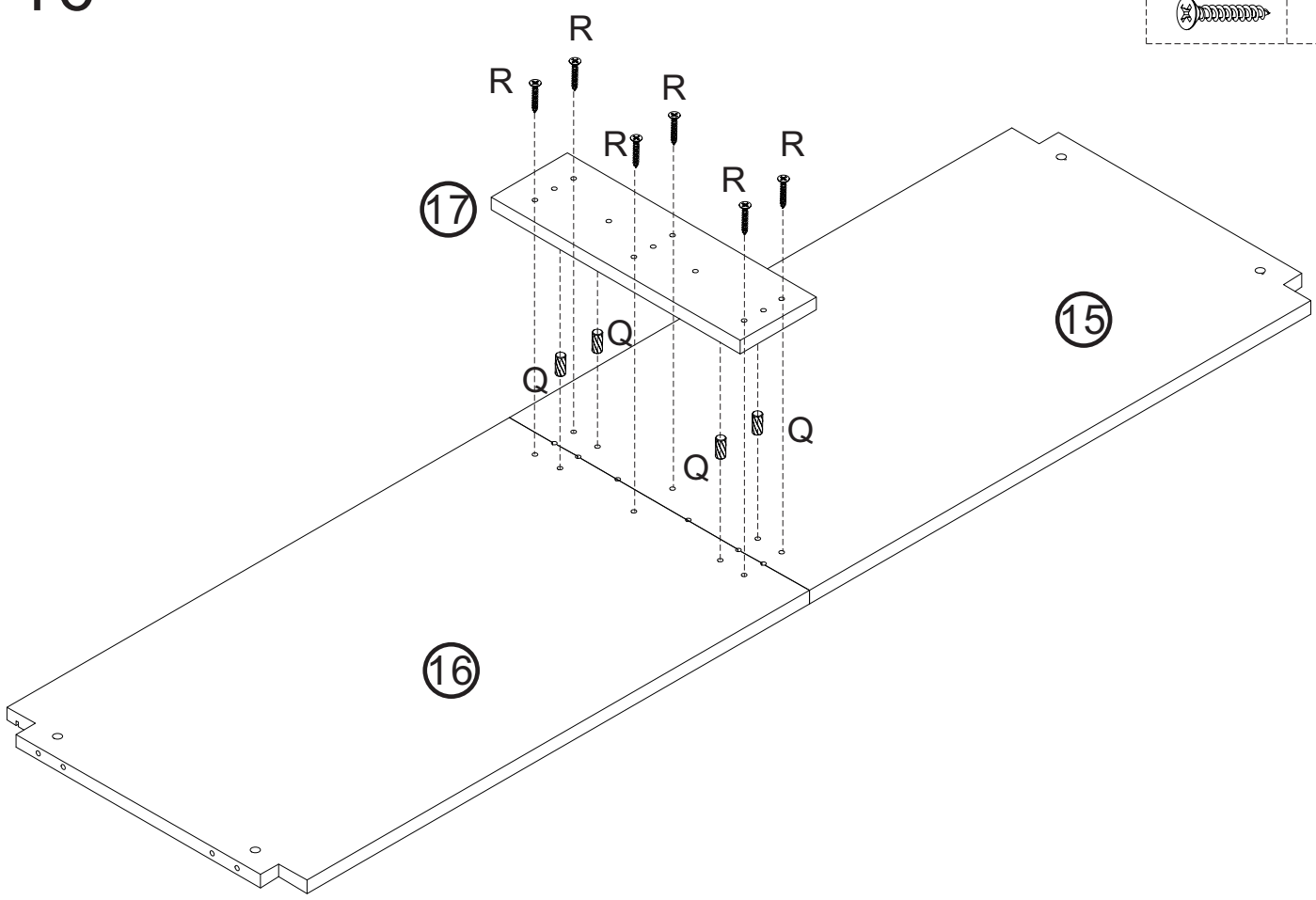

Step 17

	Cx2
	Gx4

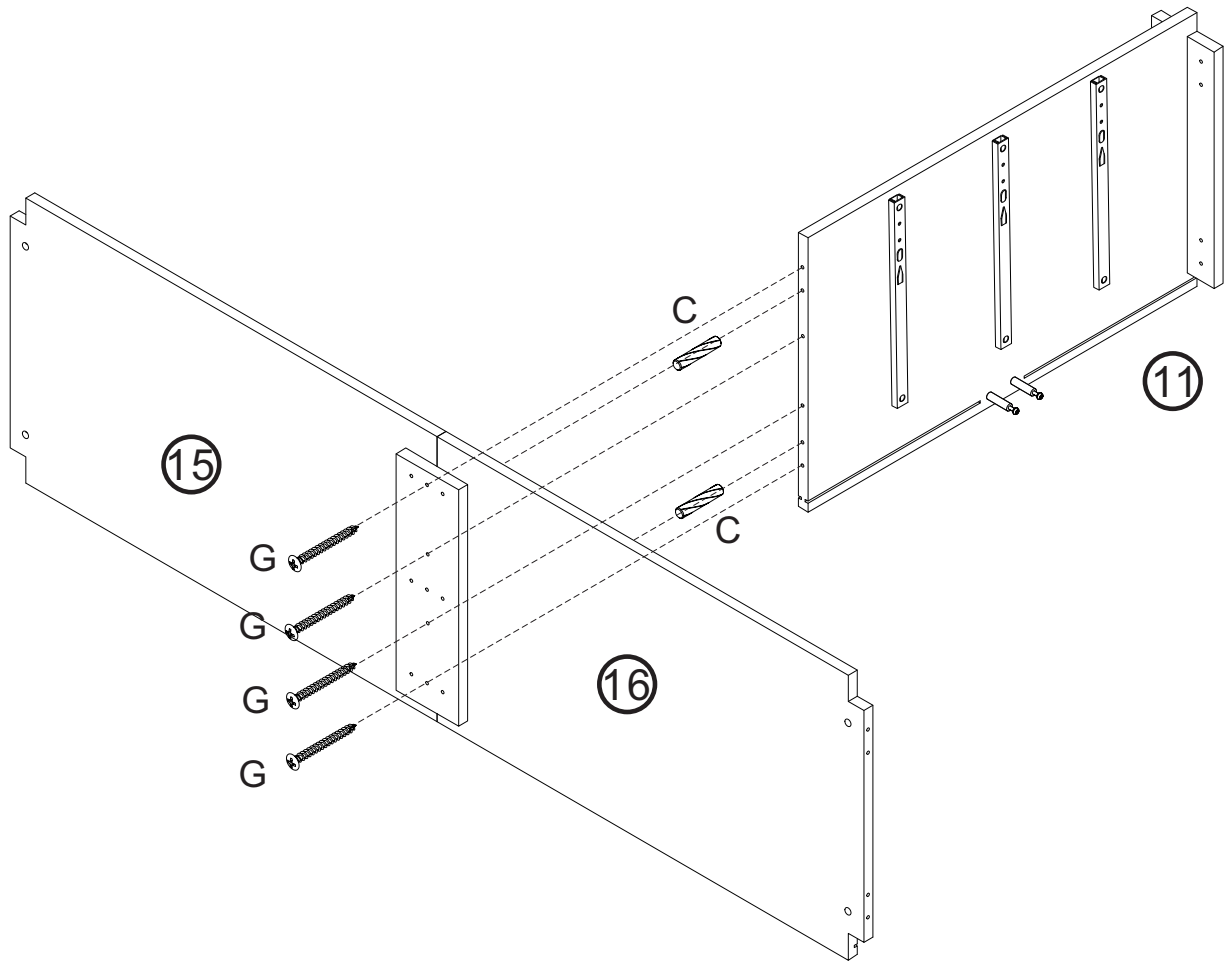

180°

Step 18

	Ax2

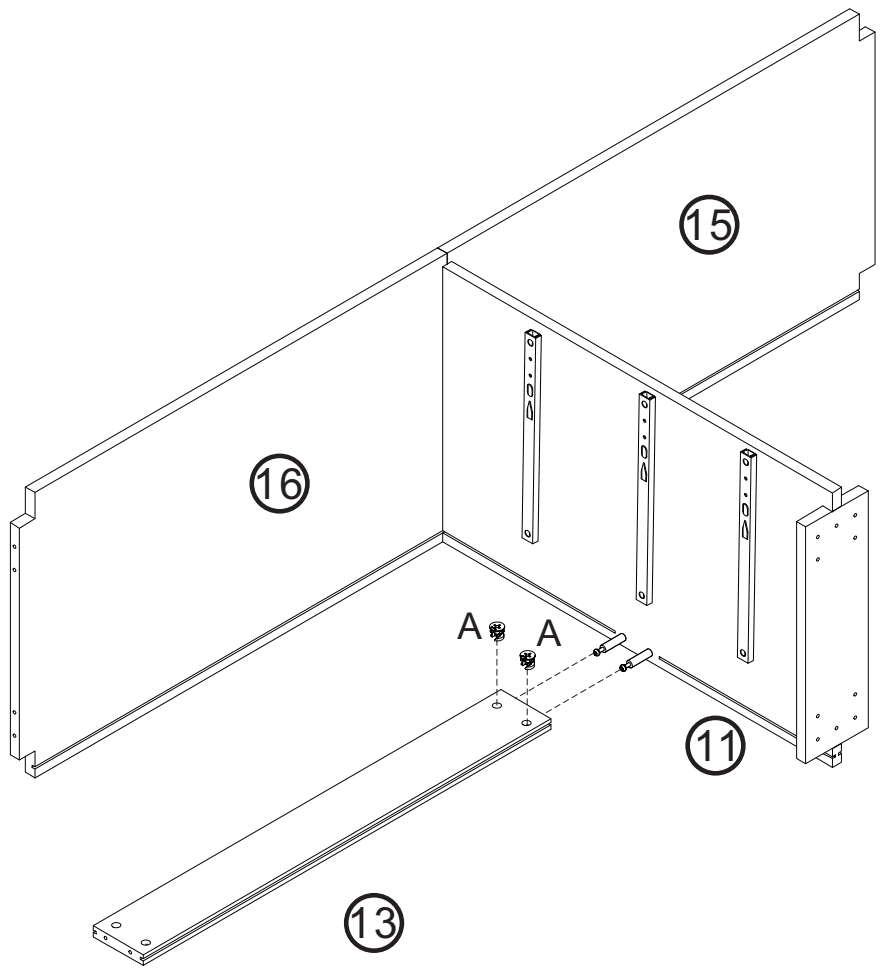

Step 19

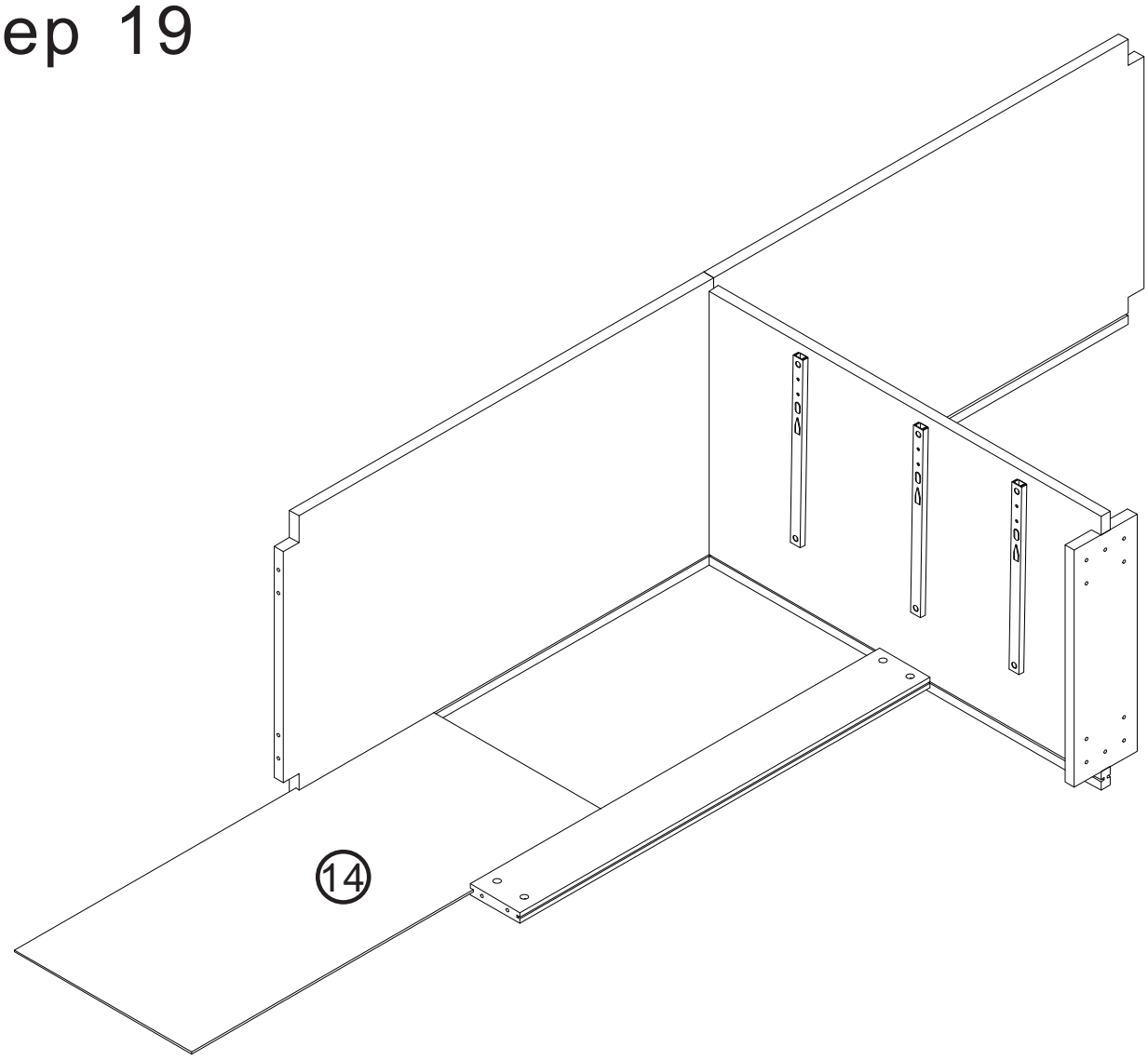

Step 20

	Ax4
	Cx2

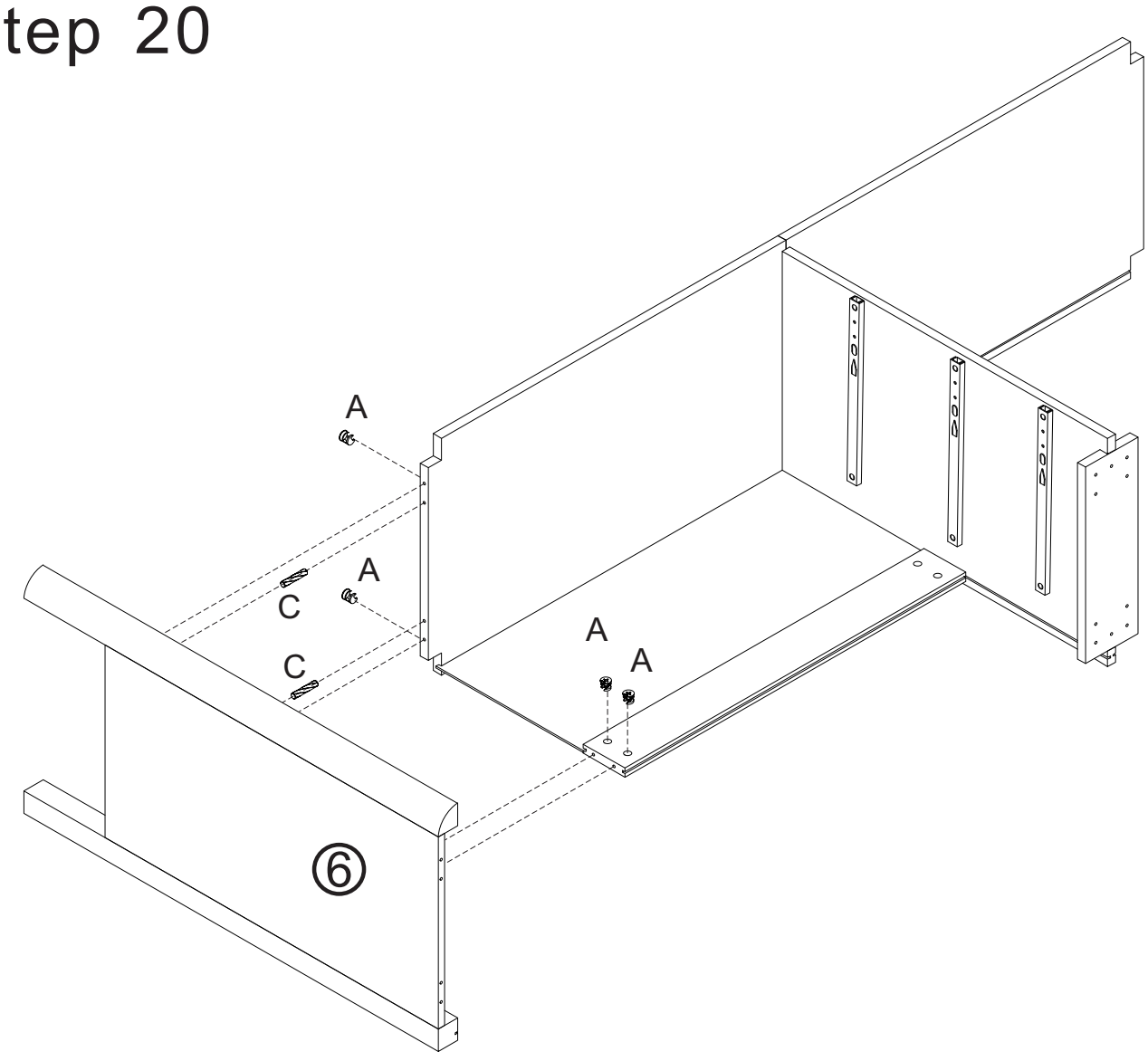

Step 21

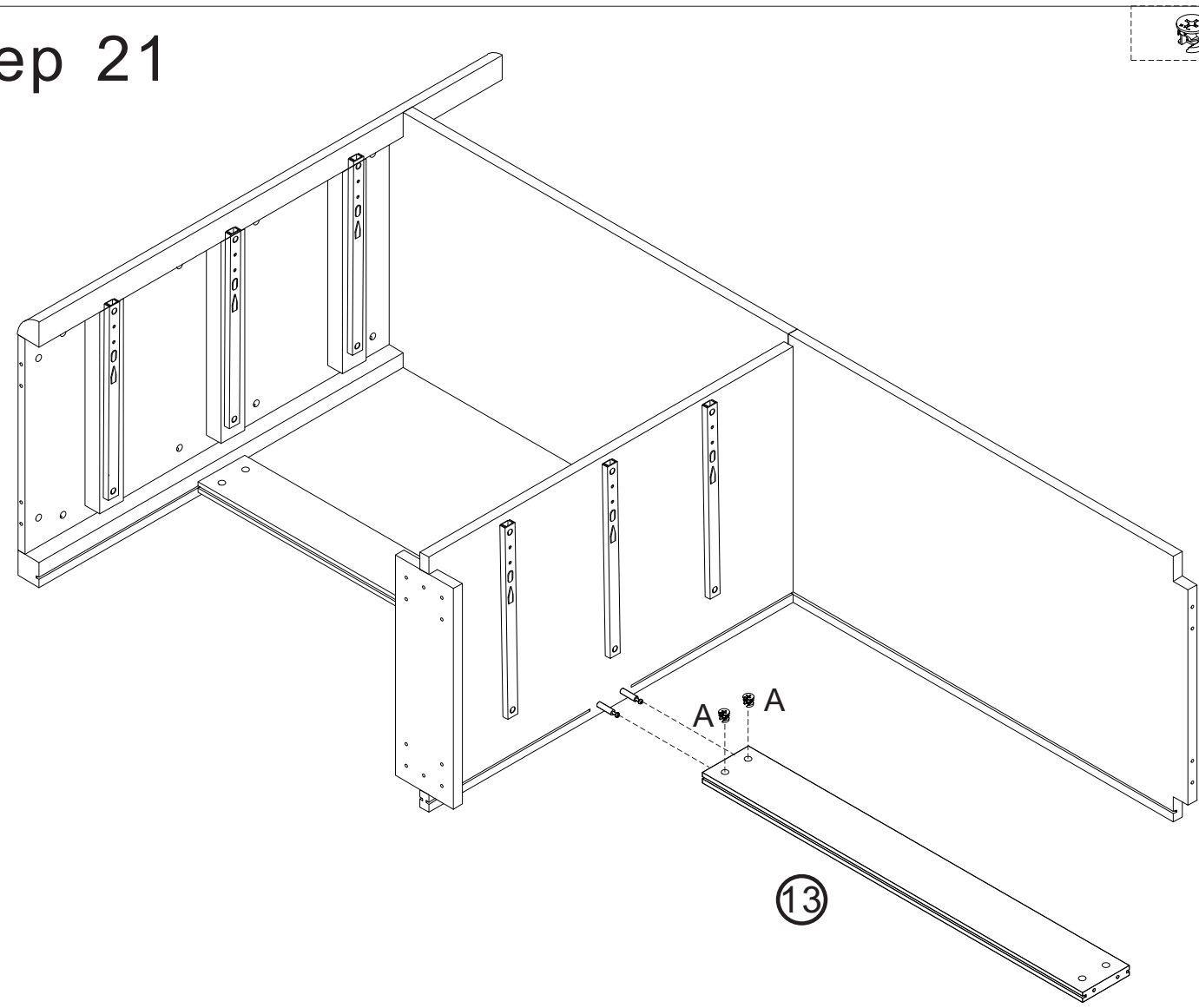

Step 22

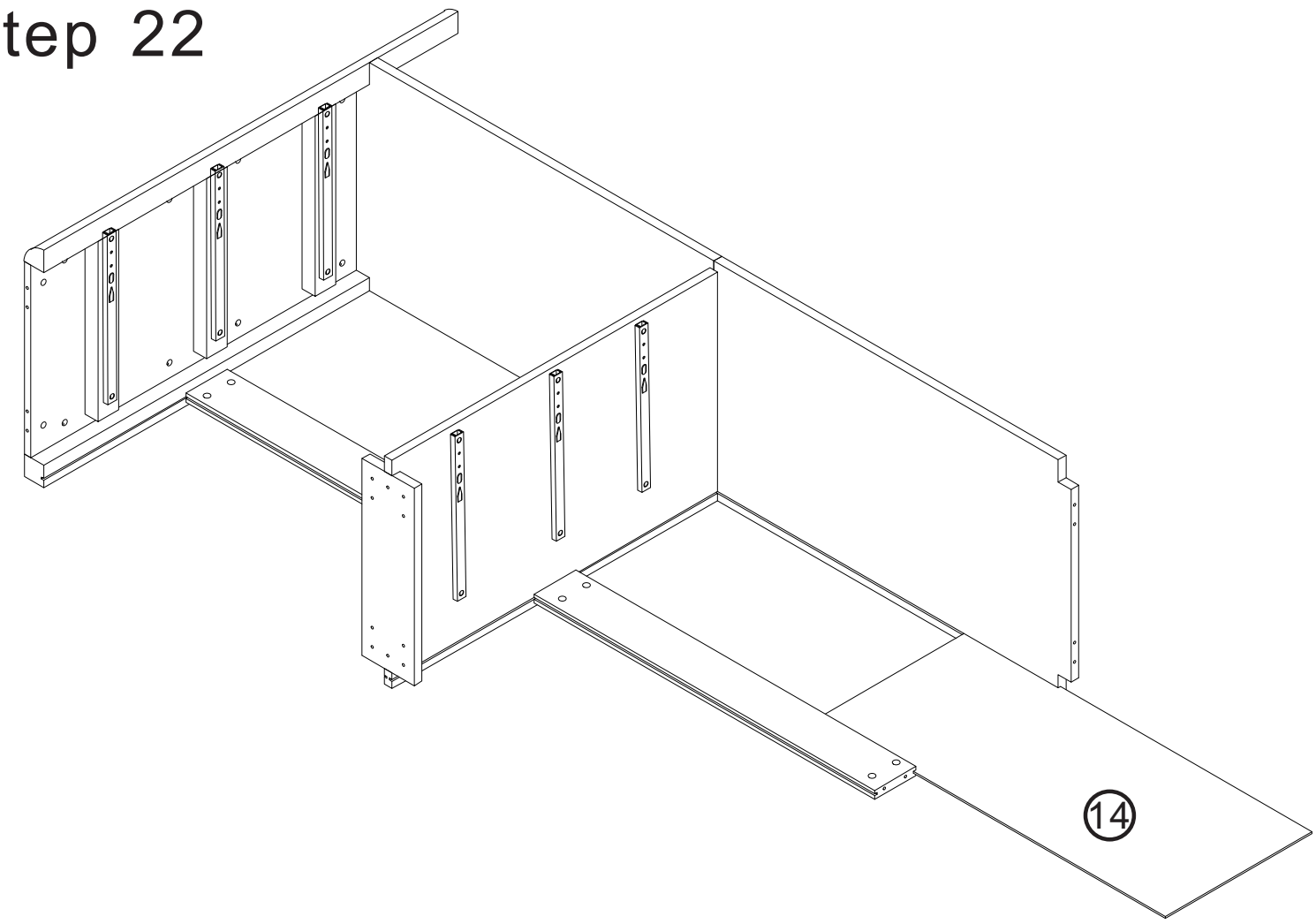

Step 23

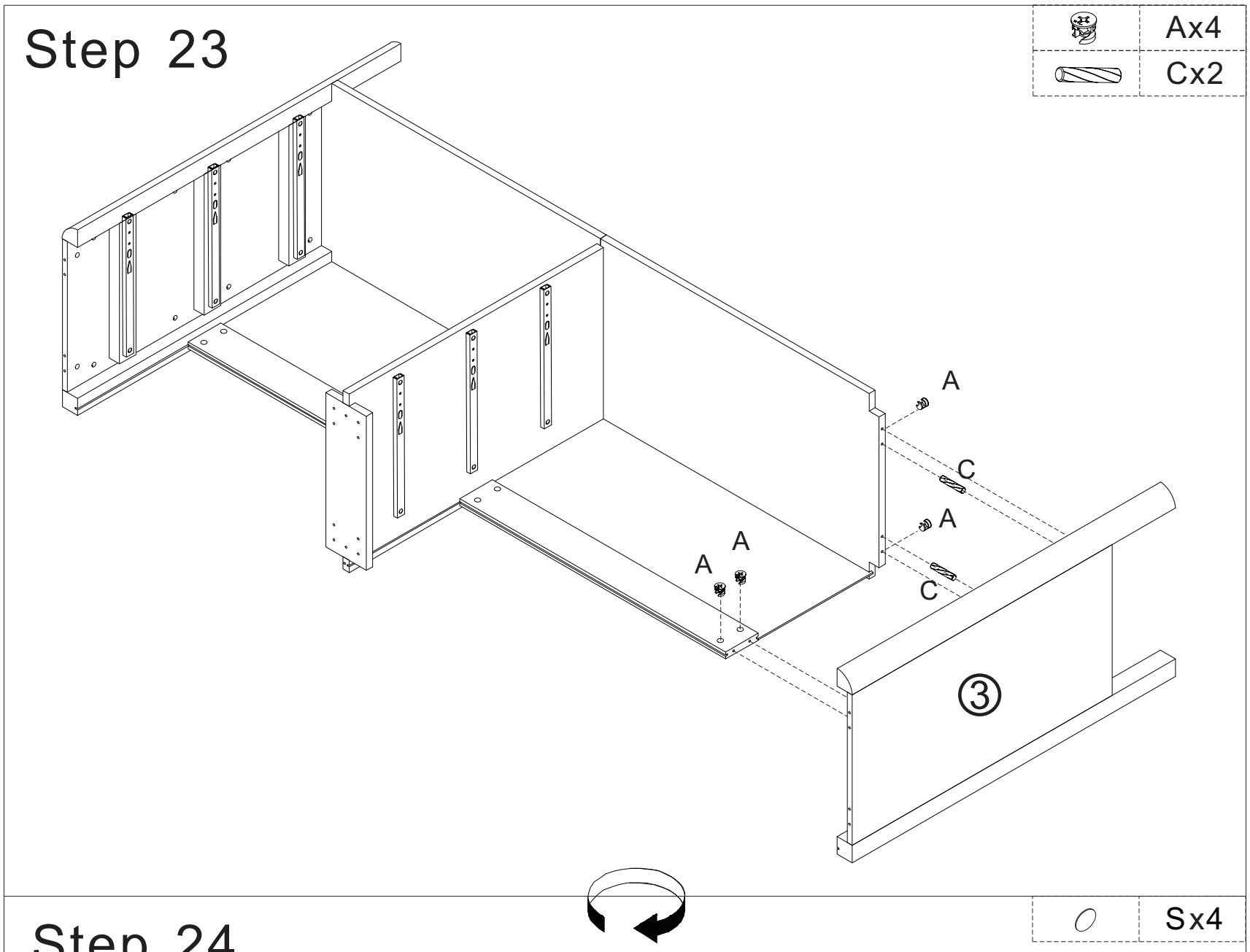

Step 24

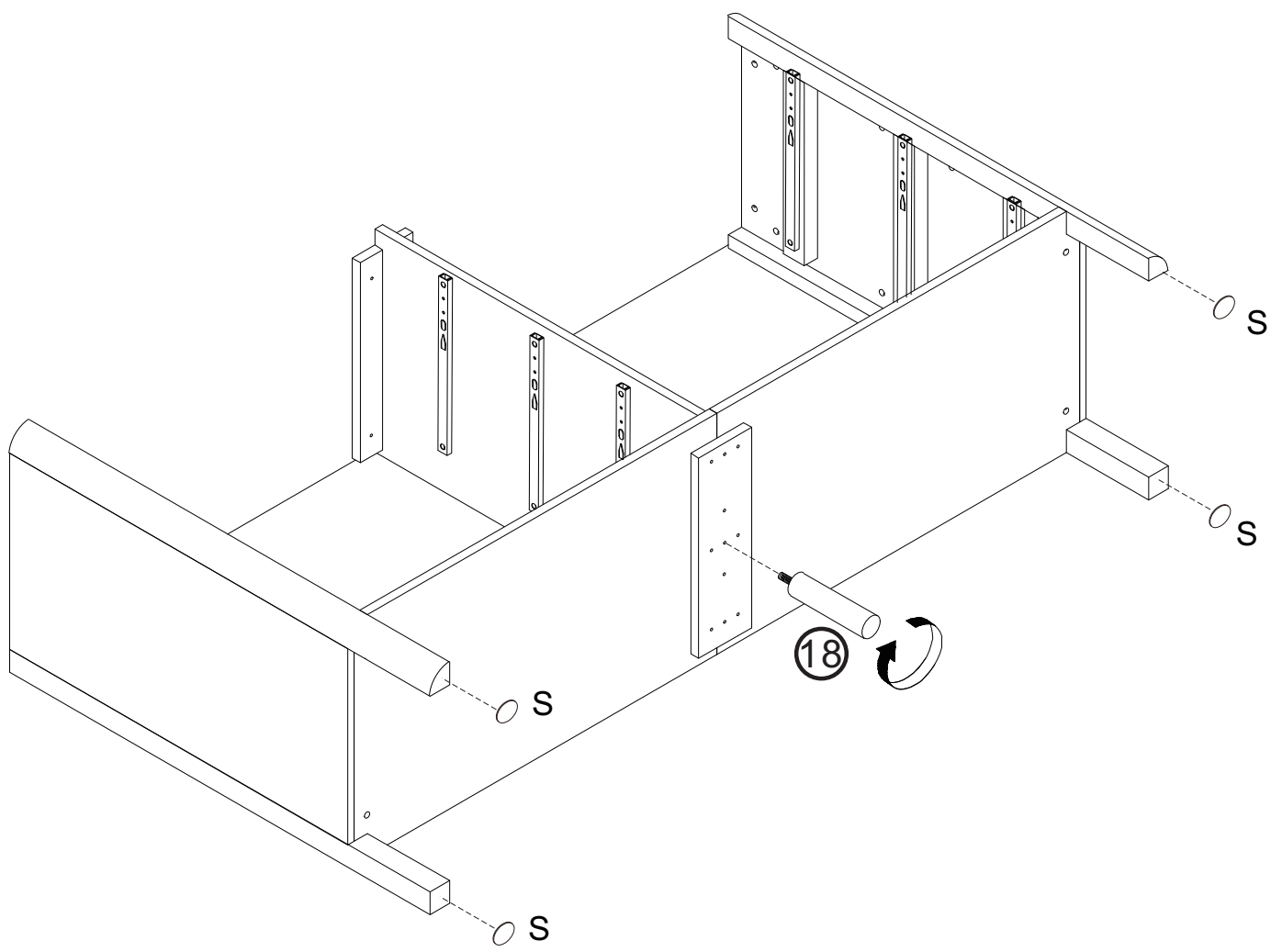

Step 25

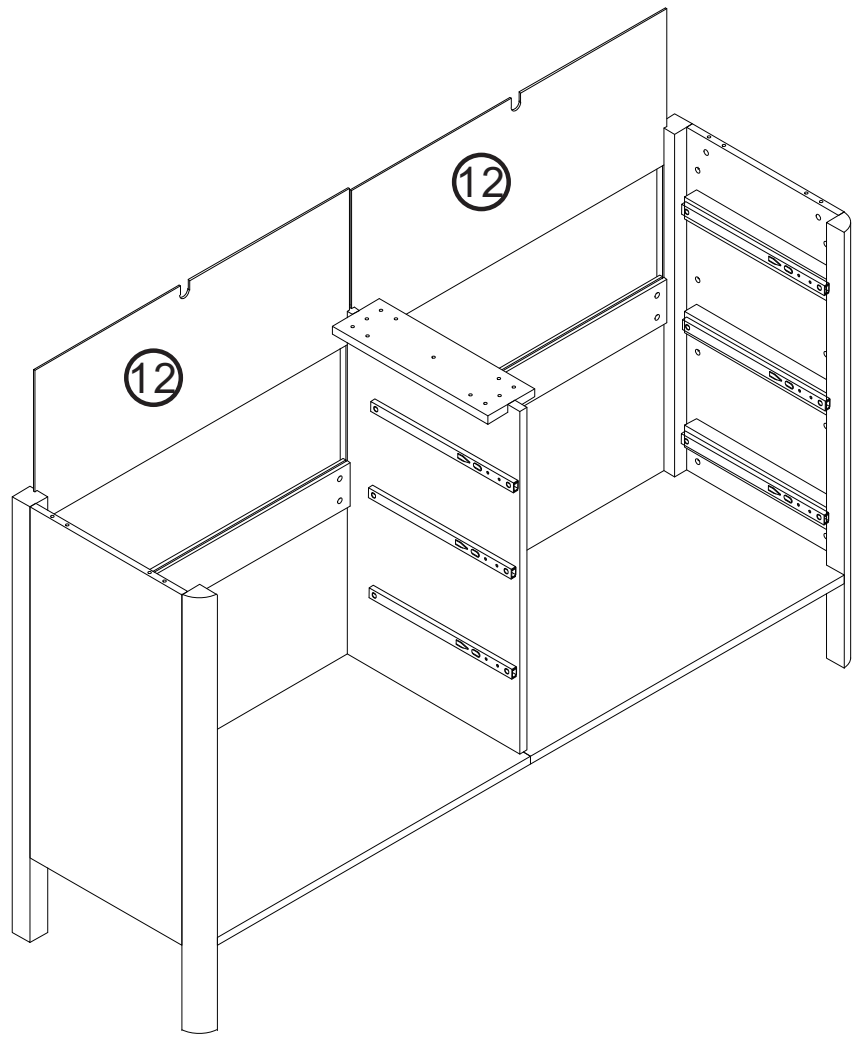

Step 26

	Bx4
	Hx2
	Ix2

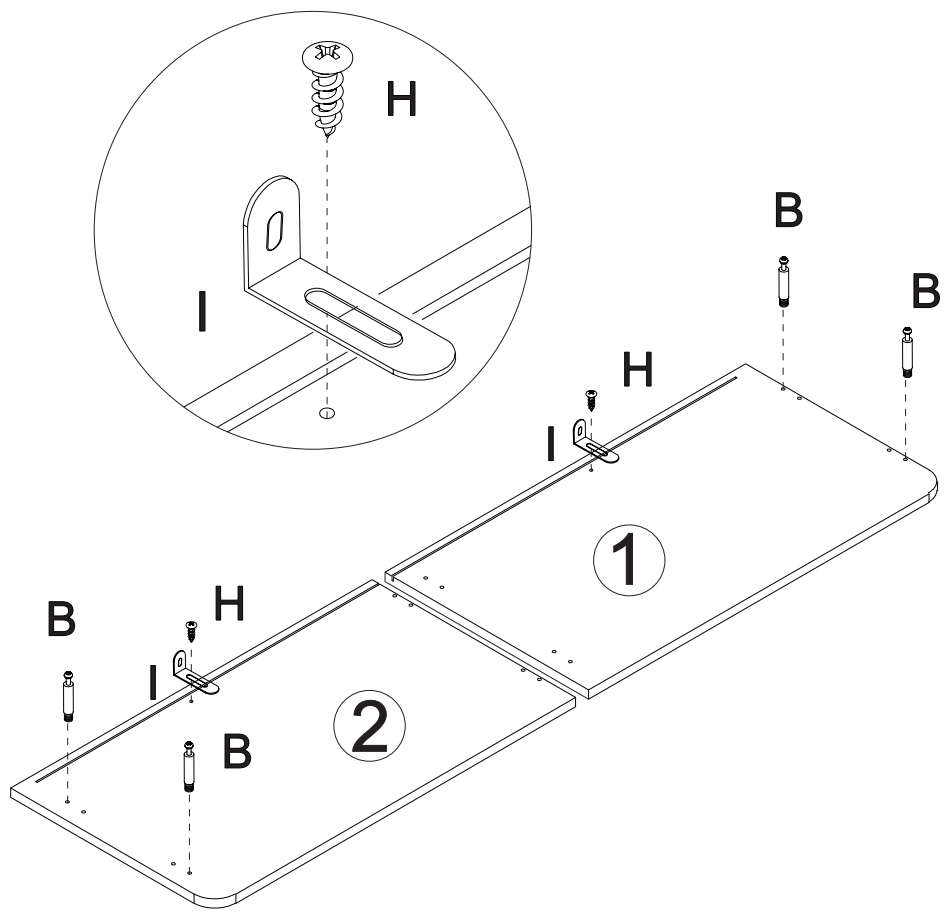

Step 27

	Ax2
	Cx2
	Qx2
	Jx2

Part 1 should be
aligned and put down.

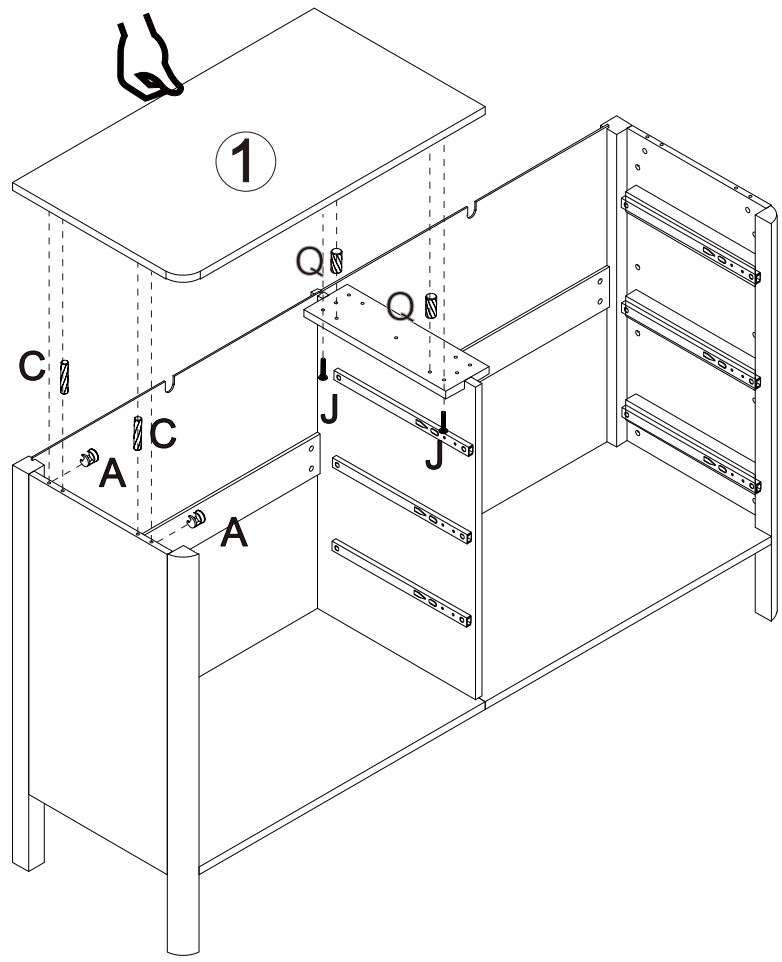

Step 28

	Ax2
	Cx2
	Qx2
	Jx2

Part 2 should be
aligned and put down.

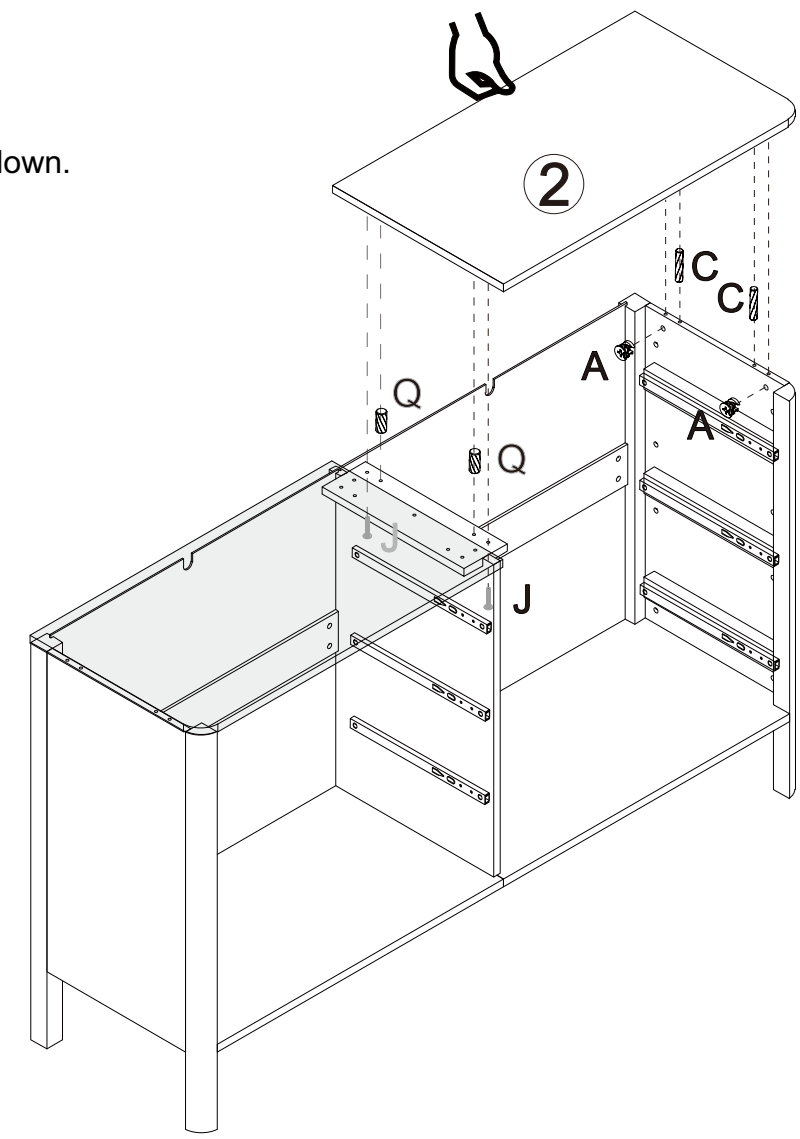

Step 29

Kx16

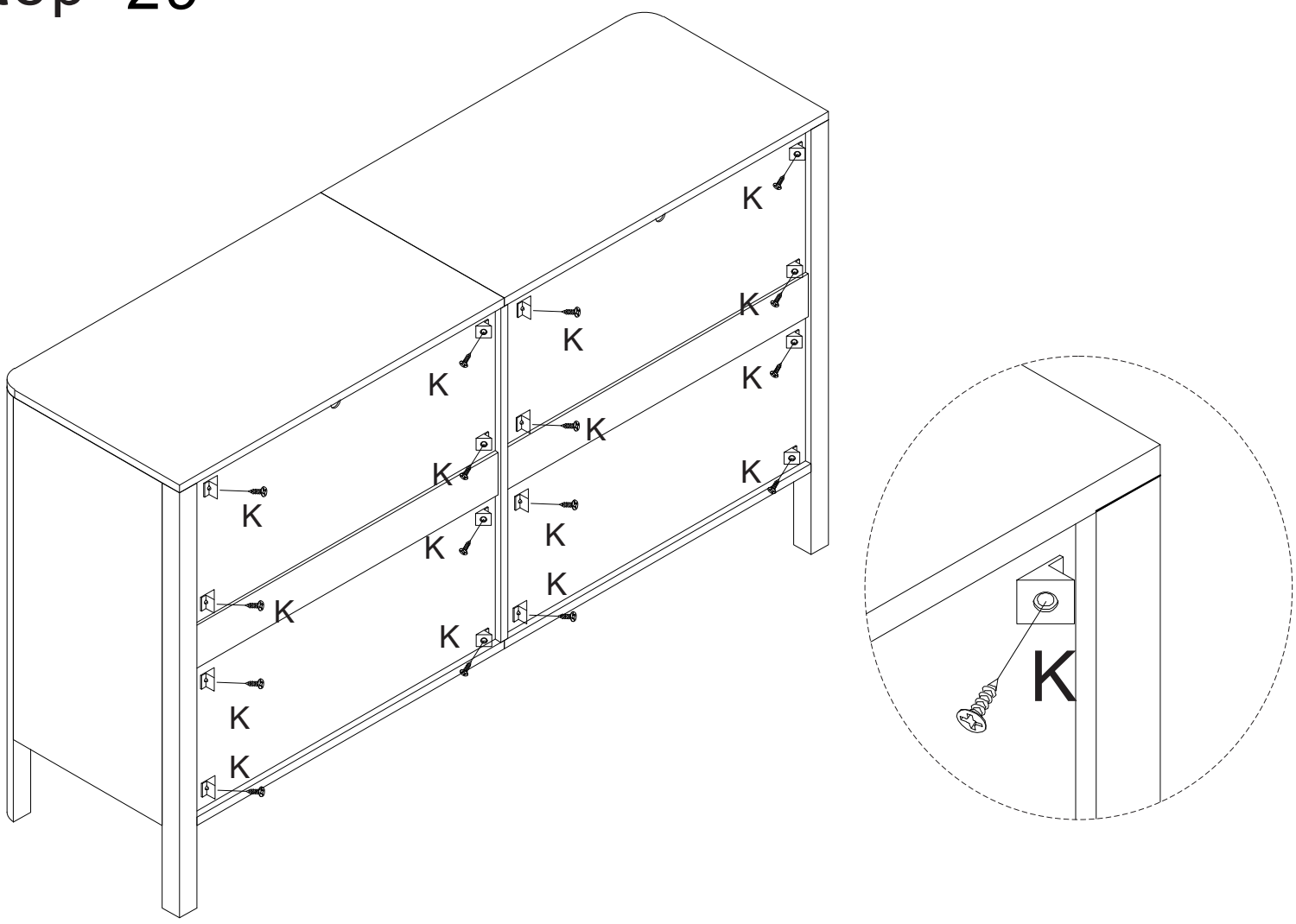

Step 30

	Mx2
	Lx2

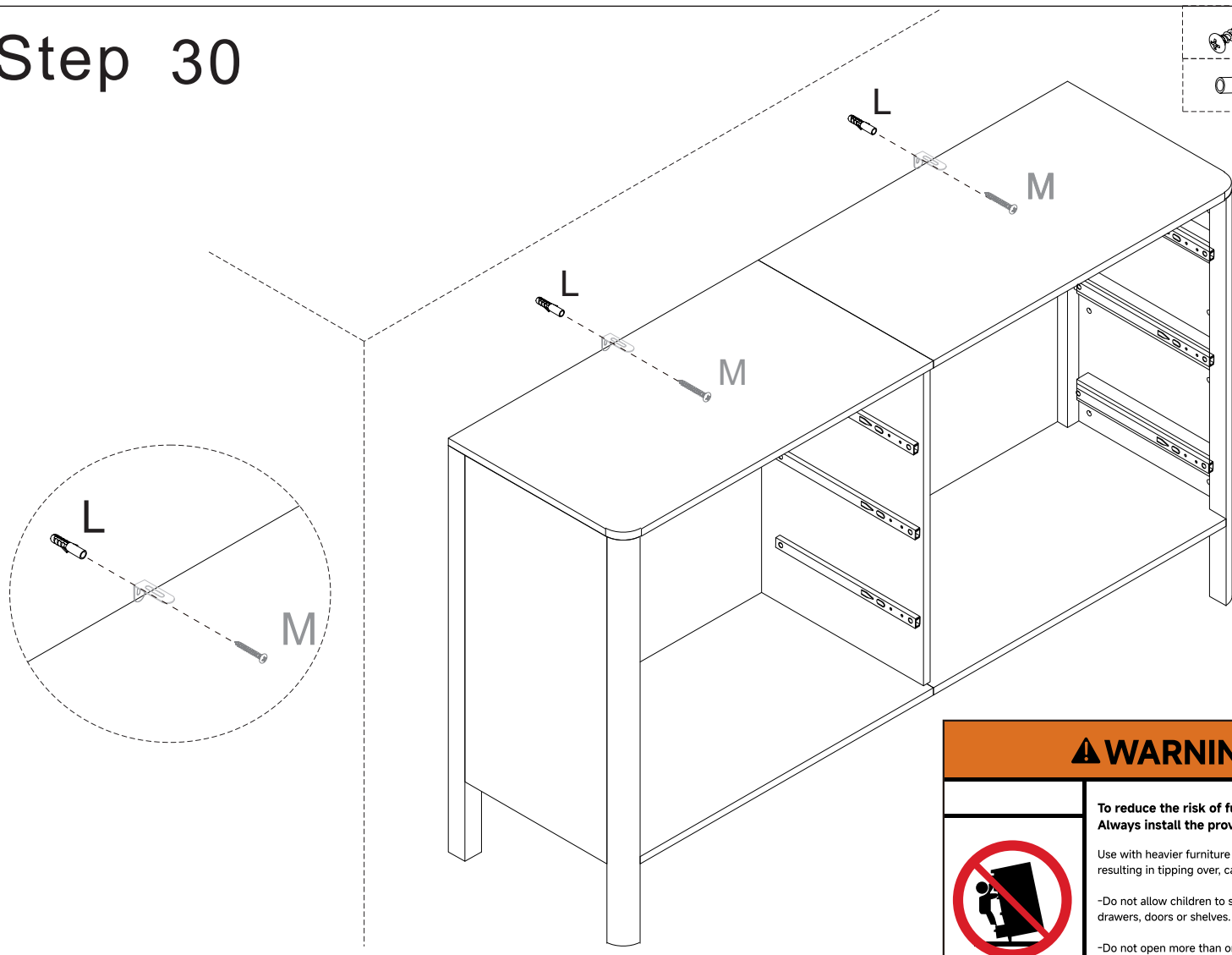

⚠ WARNING

To reduce the risk of furniture tipping over:
Always install the provided tip-over restraints.

Use with heavier furniture may create instability resulting in tipping over, causing death or serious injury.

-Do not allow children to stand, climb or hang from drawers, doors or shelves.

-Do not open more than one drawer at a time.

-Place the heaviest items in the bottom drawer.
This is a permanent label. Do not remove!

Mx30

Step 31

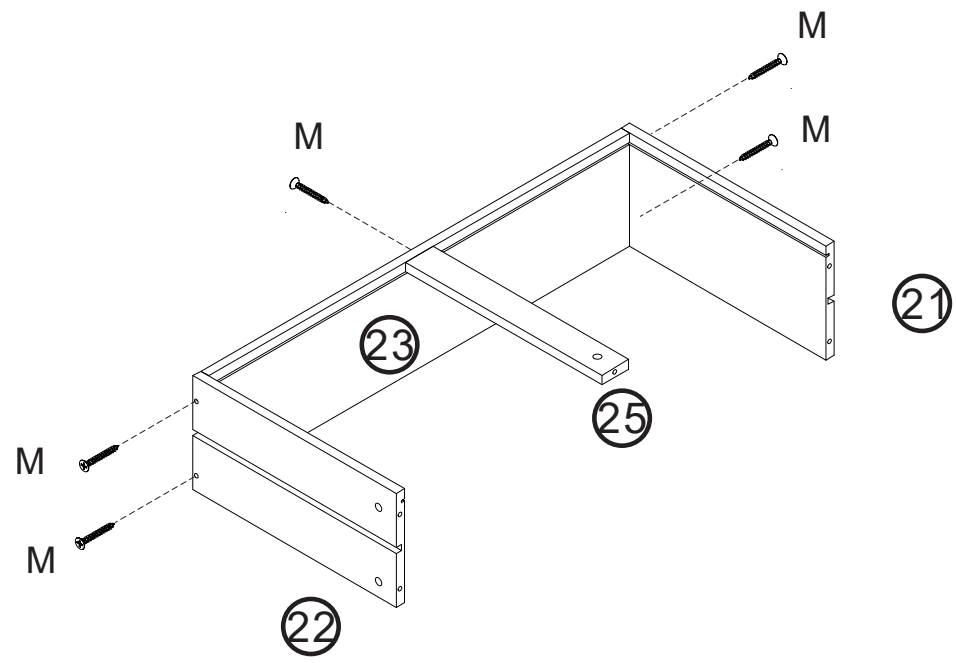

x6

Step 32

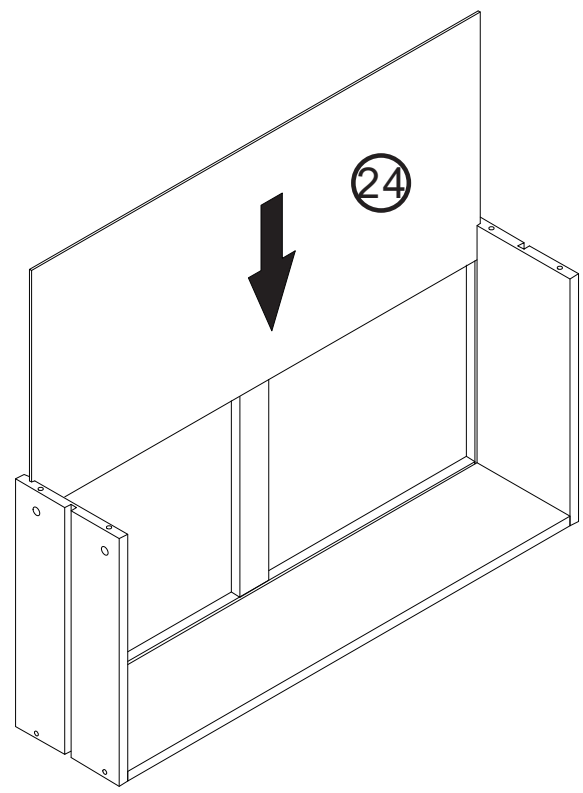

x6

Step 33

	Ax15
	Bx15
	Nx3
	Ox3

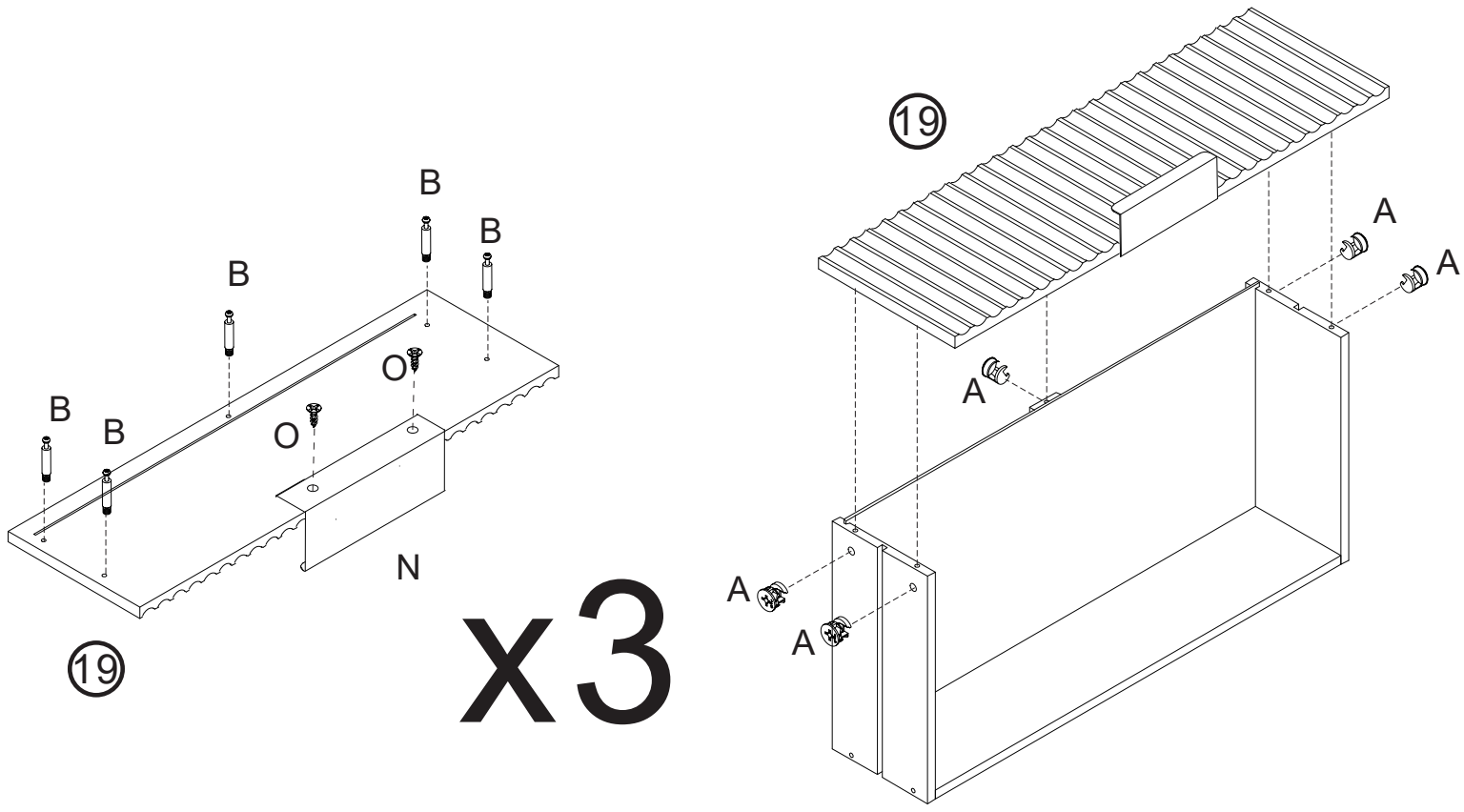

Step 34

	Ax15
	Bx15
	Nx3
	Ox3

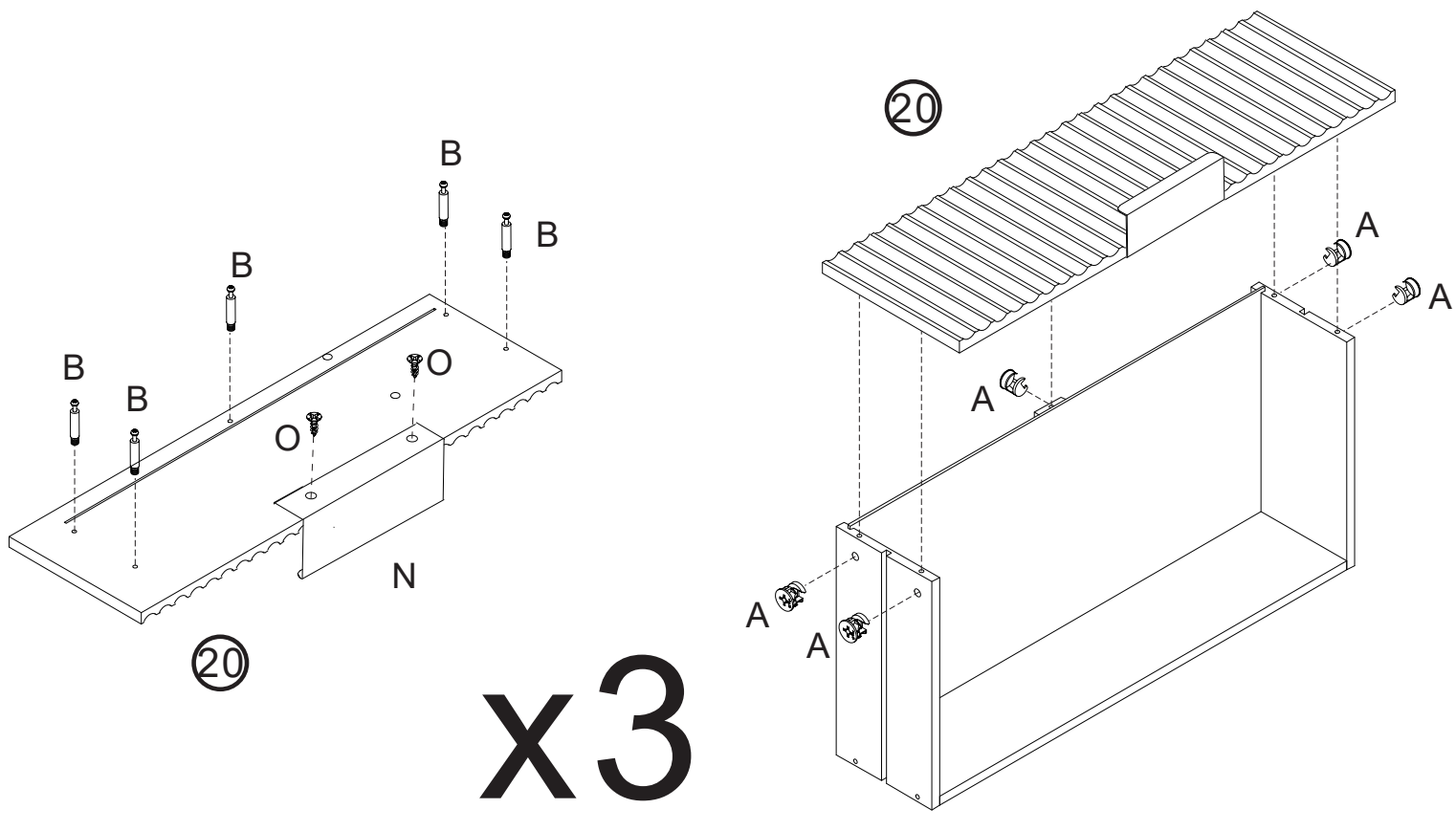

Step 35

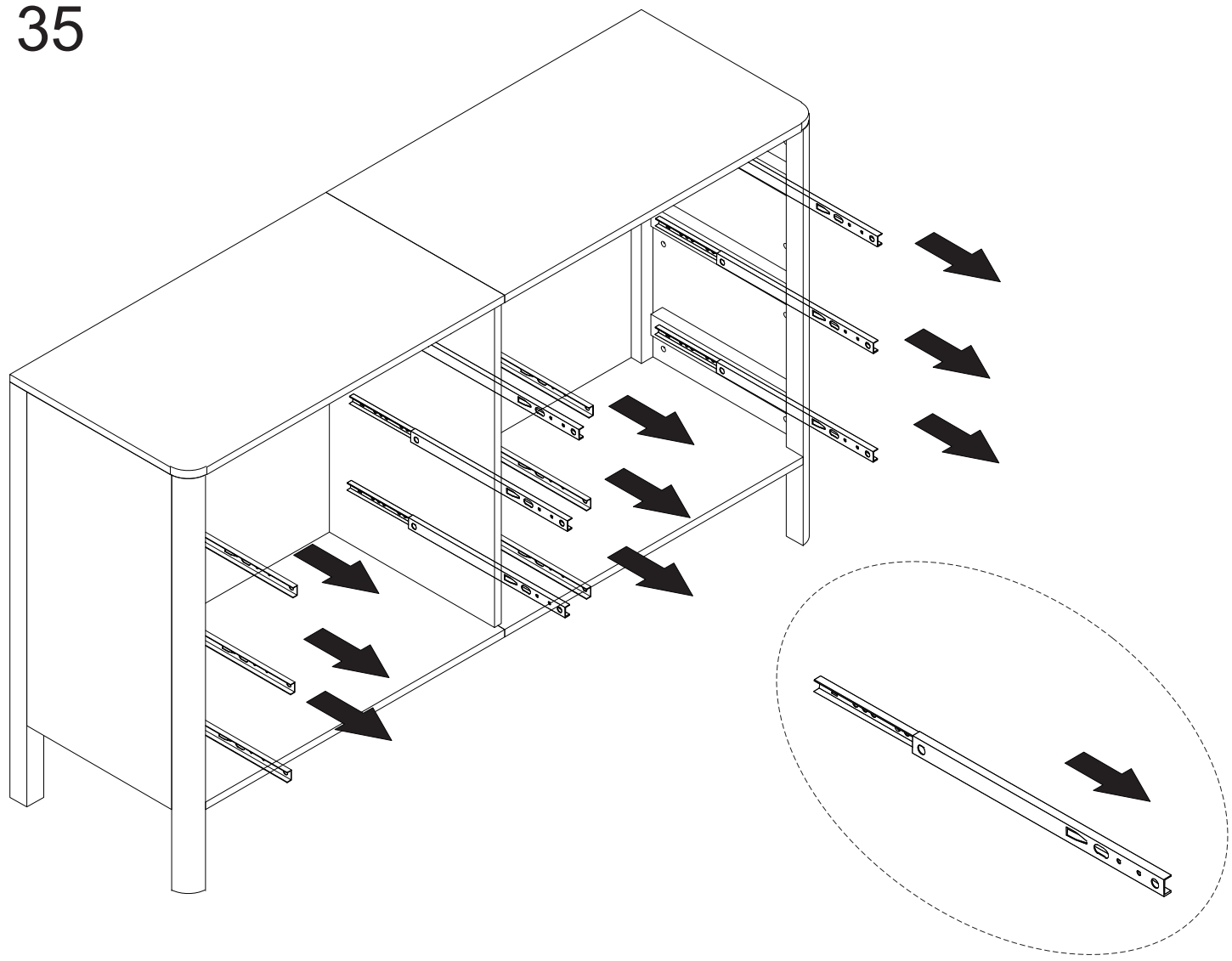

Step 36

	Px6

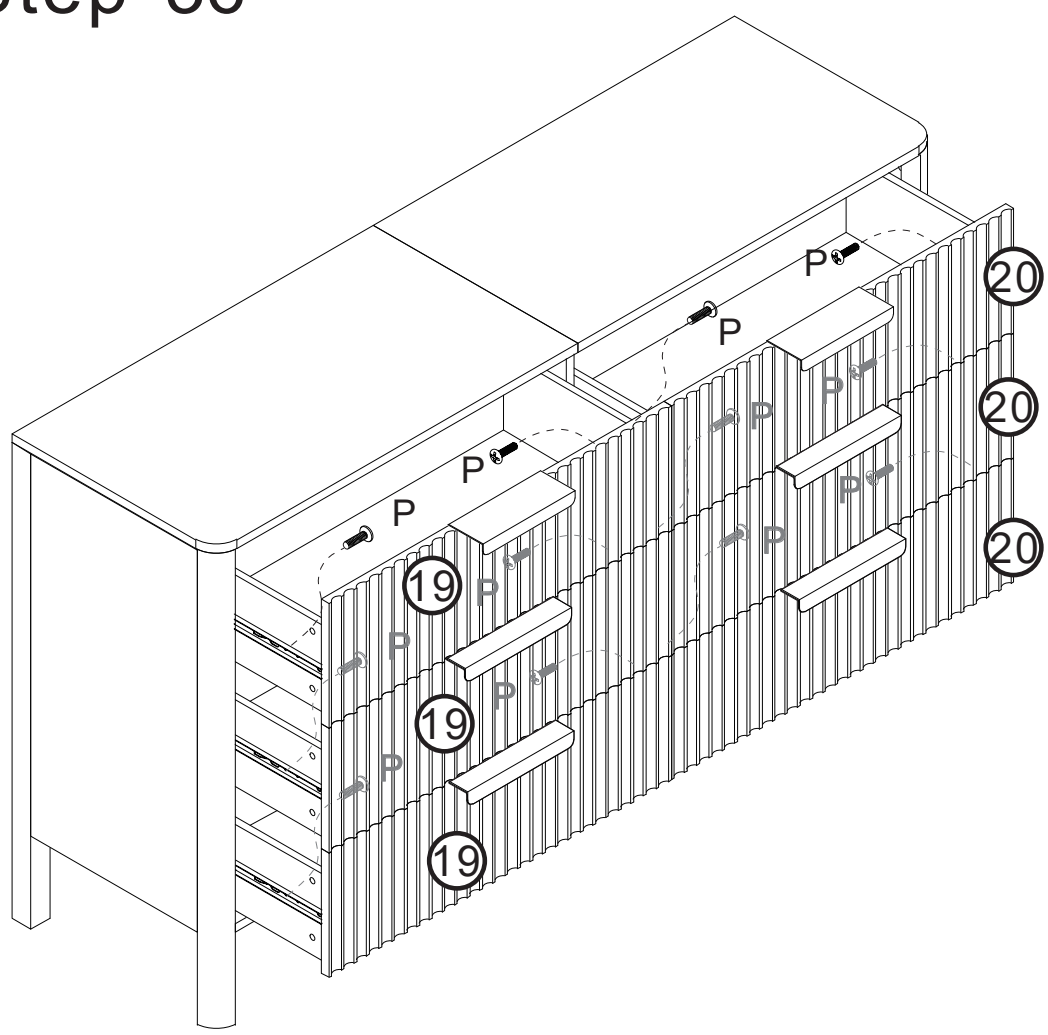

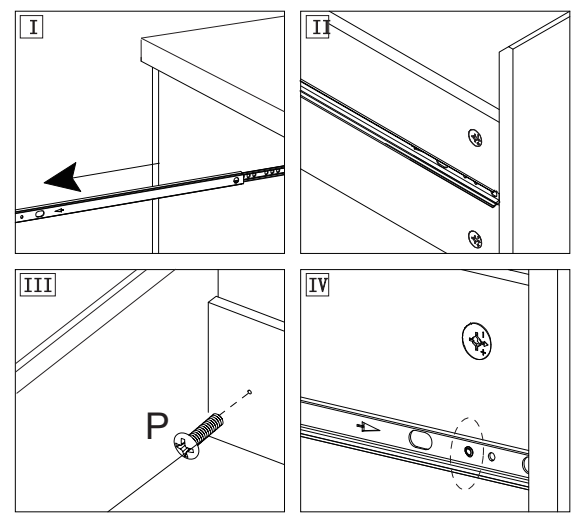

AFTER-SALES SERVICE CARD

We sincerely thank you for trusting our service and our products, and may this product add enrichment to your home. We guarantee that the product has undergone strict quality inspection and meticulous packaging. If you encounter any issue regarding either shipping or the product, please feel free to contact us at any time. We'd be more than happy to serve you wholeheartedly.

Yours Sincerely

If you have any questions or concerns please feel free to contact us.
We're committed to providing our customers with the quality service.