Computer DesK

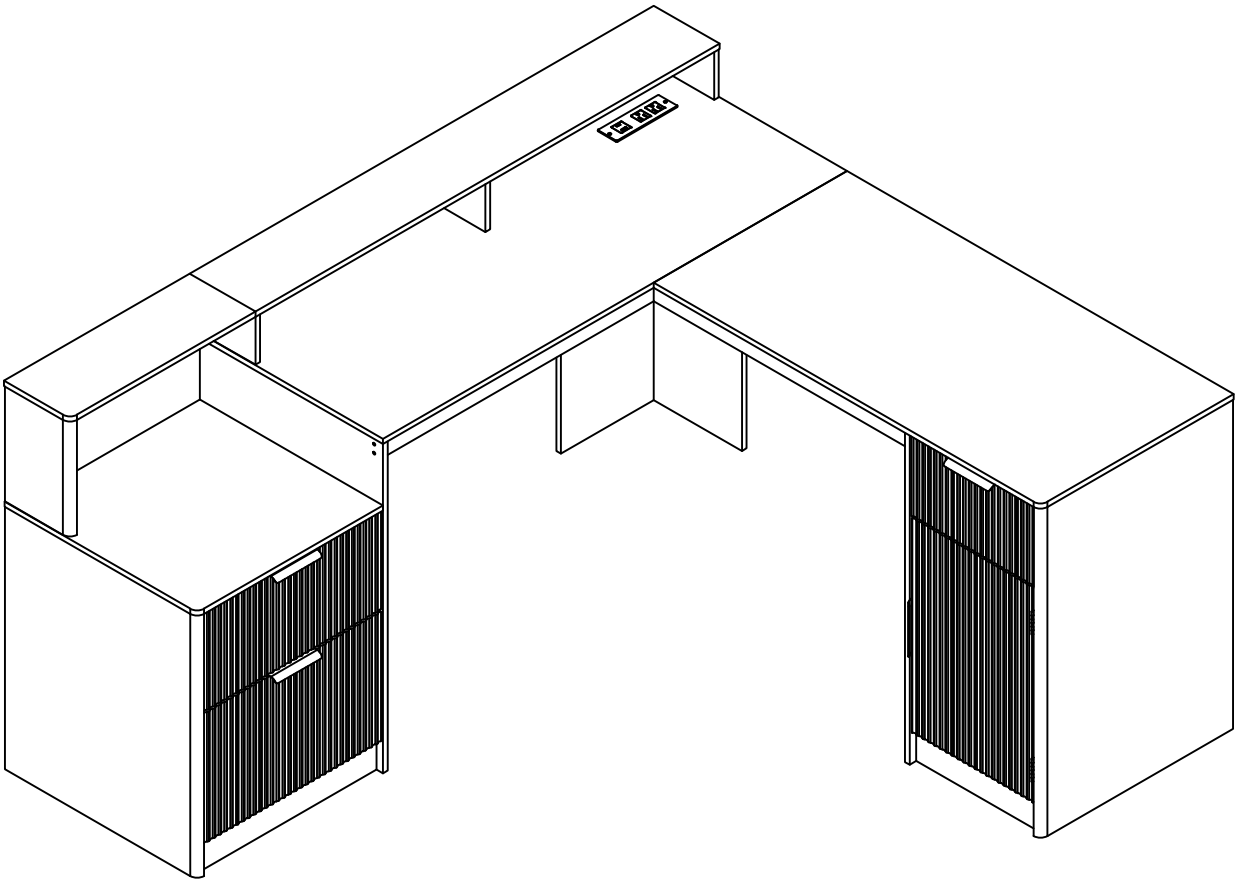

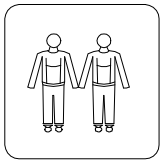

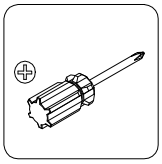

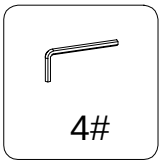

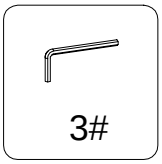

Warning:Please read this instruction manual carefully before using the product.

Version :1.0

Package Contents

Plates and iron components	Assembly tool kit	Instruction manual

Package Contents ⚠

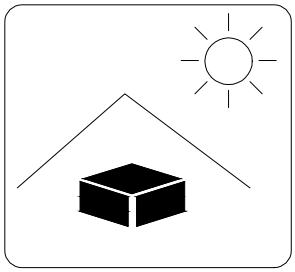

1. Avoid long-term direct sunlight exposure

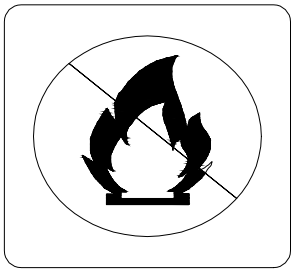

2.Stay away from fire

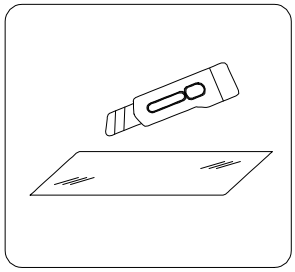

3.keep away from sharp objects

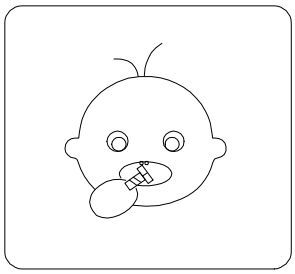

4.Keep infants/children away from assembly parts to avoid choking and suffocation.

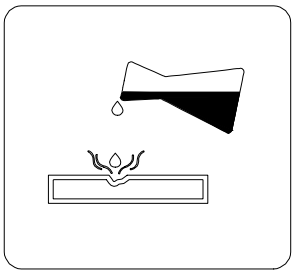

5.keep away from corrosive substances

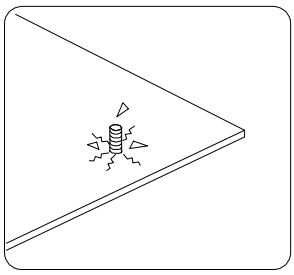

6.Pay attention to avoid cver-tightening fasteners, orthey may induce cra-cking within the board.

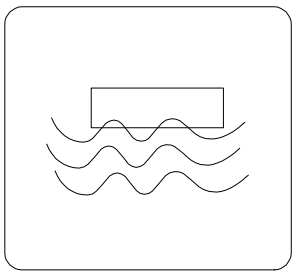

7.Prevent objects from being damaged by immersion in water

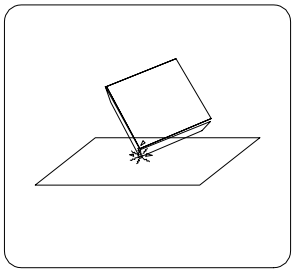

8.Prevent object collision and damage

9.Be careful to avoid collisions

Installation of Cams and Pins

Screw the pin into the hole. To set the cams correctly, ensure that the arrow on the cam is opening o the hole of the pin it is locking. Lock the cam by tturning the cam head with a screwdriver until it is tightened. Please do not use an electric screwdriver to assemble the unit.

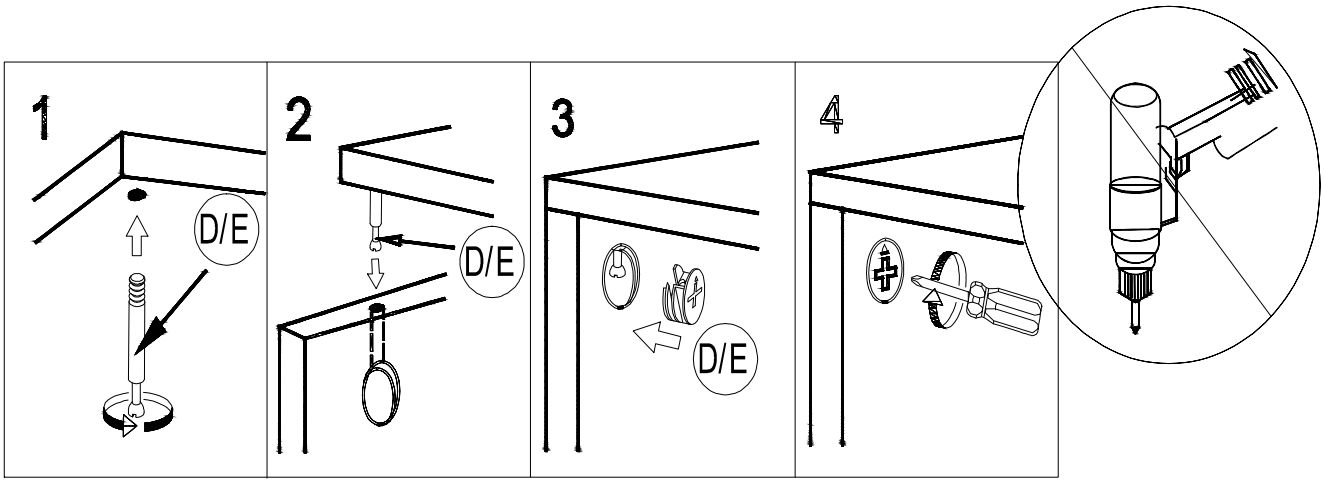

1.Matters needing attention

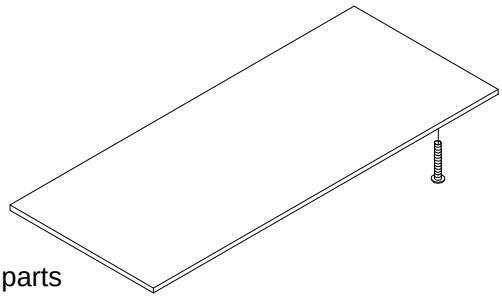

Be sure to use the proper screws to avoid damaging the parts

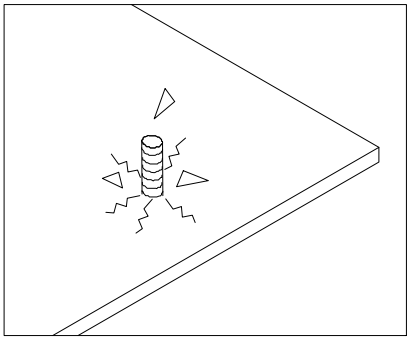

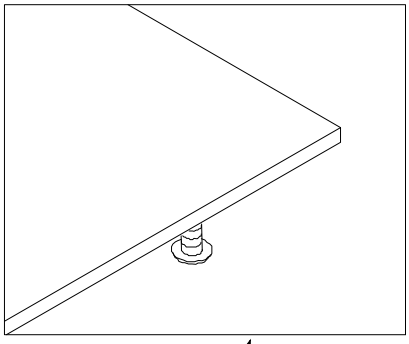

✕

Wrong screws can cause the plank to crack

√

The right screw is the right size

Matters needing attention

(1) When installing the screws in the installation step, the screws do not need to be tightened. After this installation step is confirmed and the holes are aligned, then tighten all the screws.

(2) If the screws are tightened during the installation process, it will cause problems such as misalignment of the screw holes and misalignment of the board in subsequent installations.

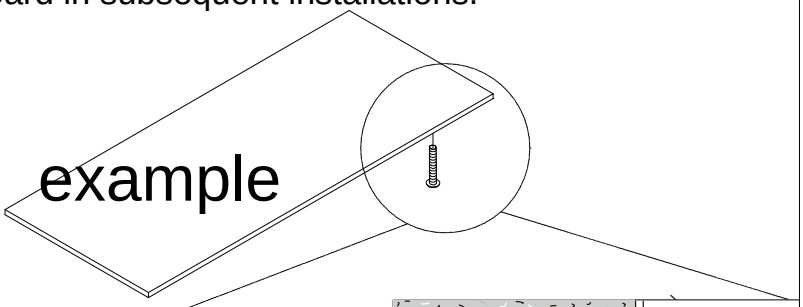

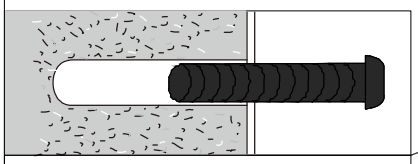

Do not tighten the screws

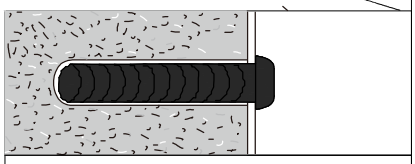

Screw down

Disassembly Diagram

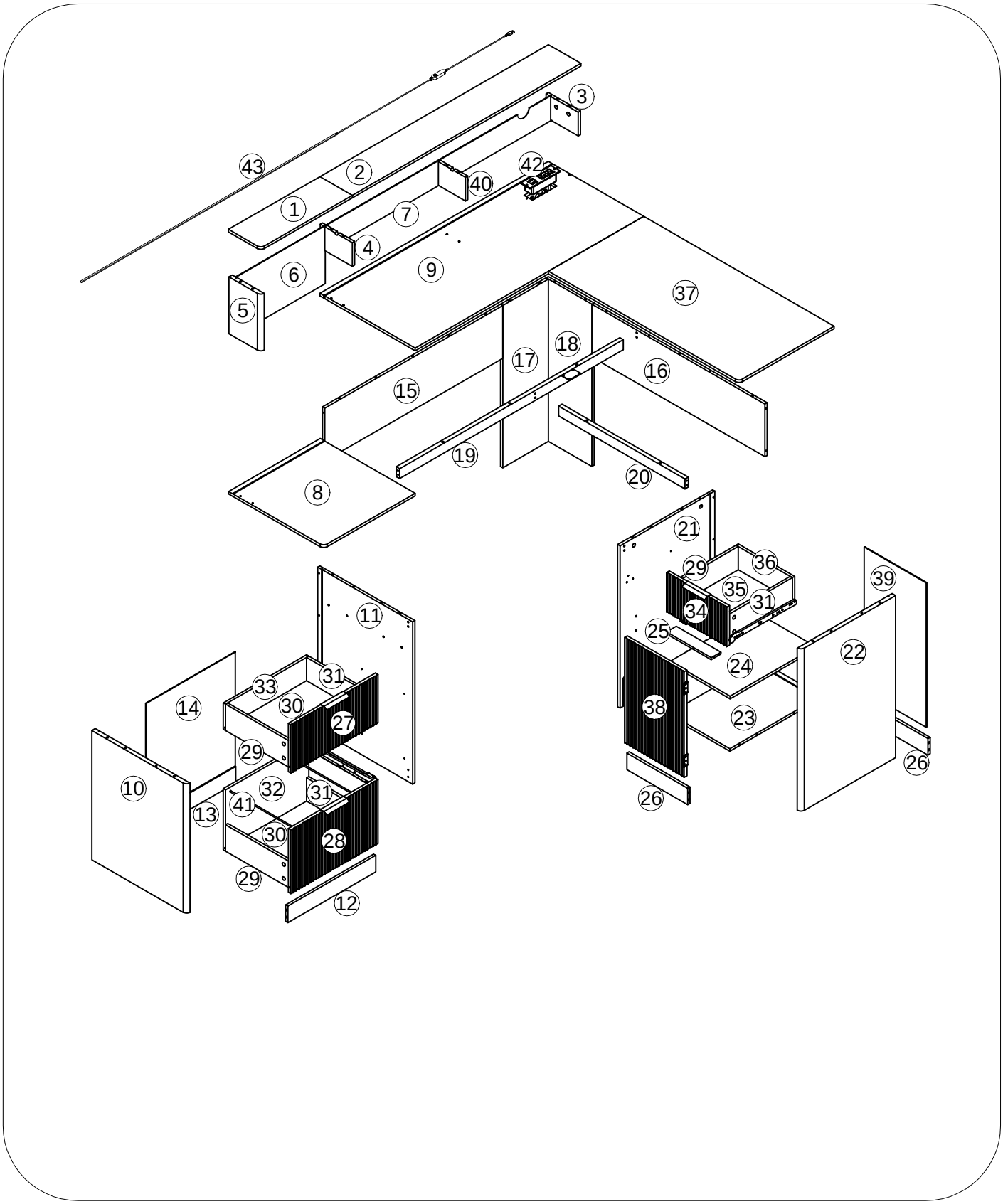

Parts List

1 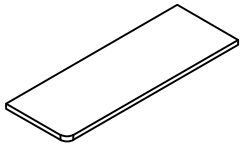 X1	2 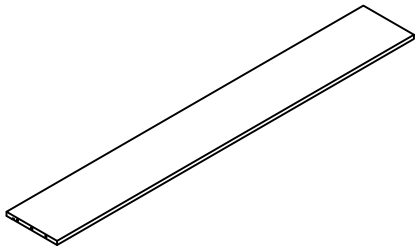 X1	3 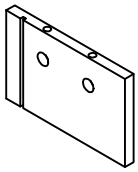 X1
4 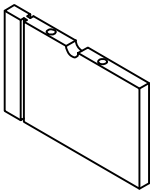 X1	5 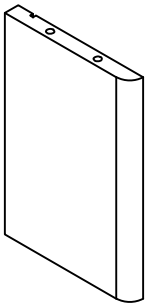 X1	6 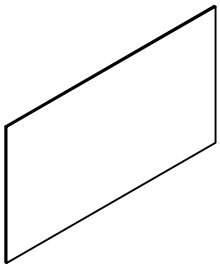 X1
7 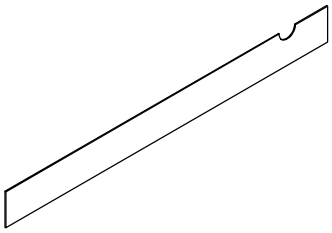 X1	8 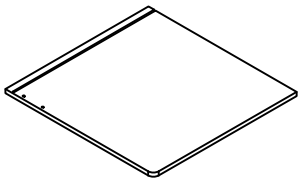 X1	9 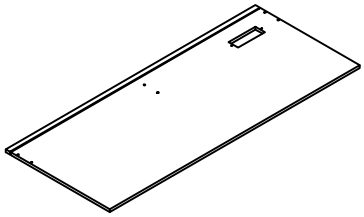 X1
10 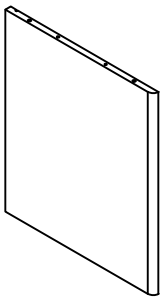 X1	11 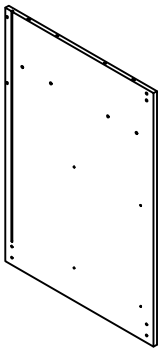 X1	12 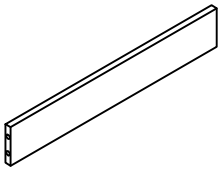 X1

Parts List

13 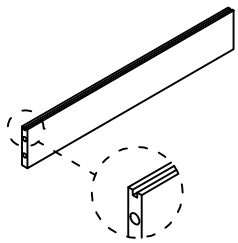 X1	14 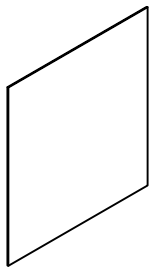 X1	15 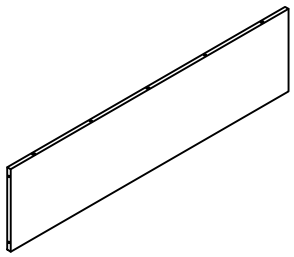 X1
16 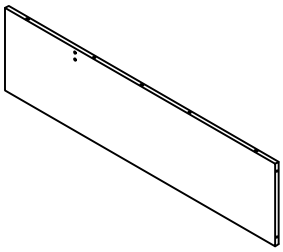 X1	17 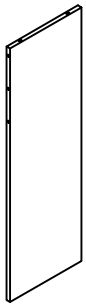 X1	18 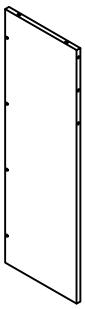 X1
19 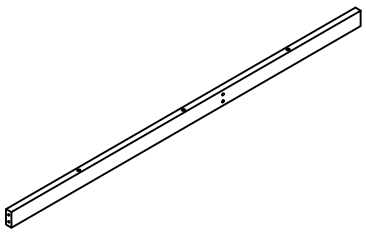 X1	20 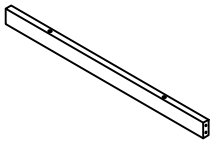 X1	21 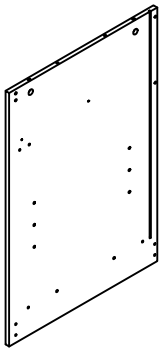 X1
22 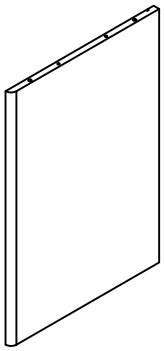 X1	23 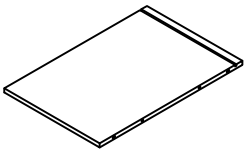 X1	24 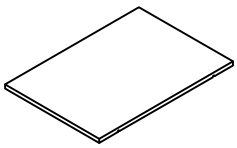 X1	25 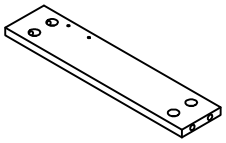 X1

Parts List

26 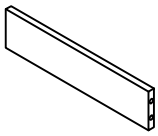 X2	27 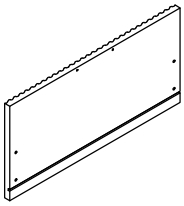 X1	28 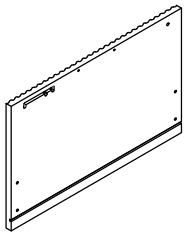 X1
29 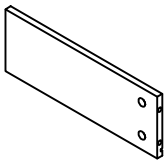 X3	30 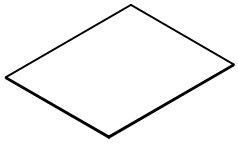 X2	31 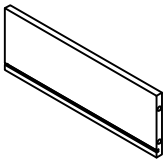 X3
32 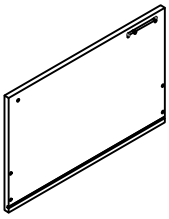 X1	33 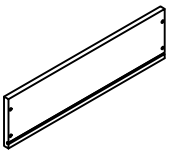 X1	34 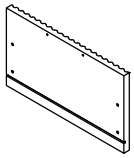 X1
35 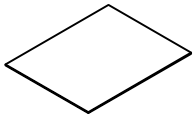 X1	36 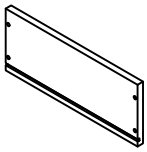 X1	37 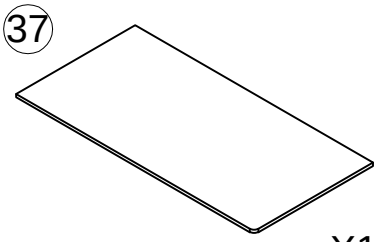 X1
38 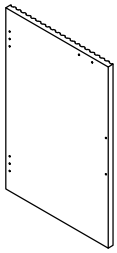 X1	39 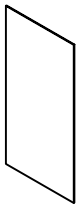 X1	40 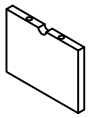 X1
41 X2	42 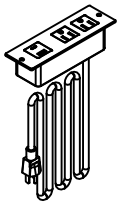 X1	43 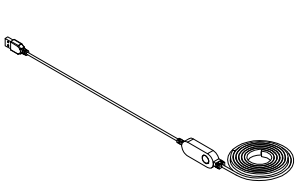 X1

Tool sheet

A M6*50mm 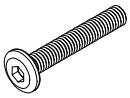 X5	B ST6*40mm X64+4	C Ø15*9.5mm X64+4	D ST3.5*12mm X48+2
E Ø6*35mm X27+1	F ST5*40mm 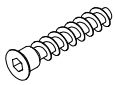 X36+1	G 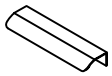 X4	H ST3.5*14mm X20+1
I X3	J X18	K ST3*14mm 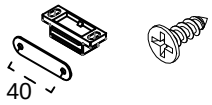 -P X4 X1	L X2
M 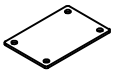 X1	N 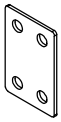 X2	O Ø5*15 X4	P M6*10mm X8
14" 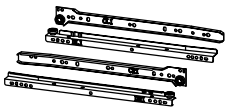 X3	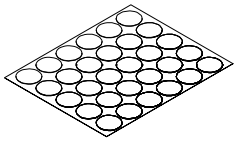 X1	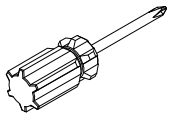 X1	4# X1
3# X1			

ASSEMBLY INSTRUCTION

STEP 1

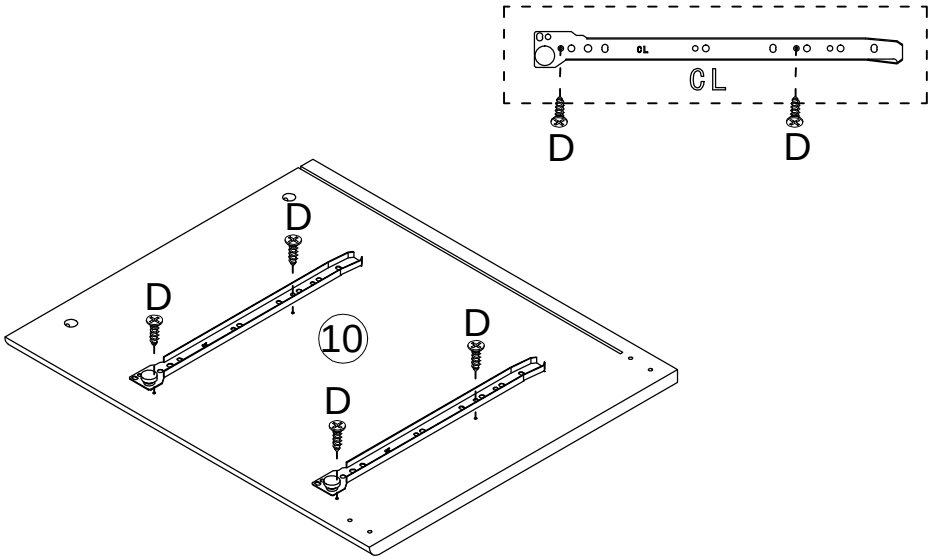

D ST3.5*12	CL
X4	X2

STEP 2

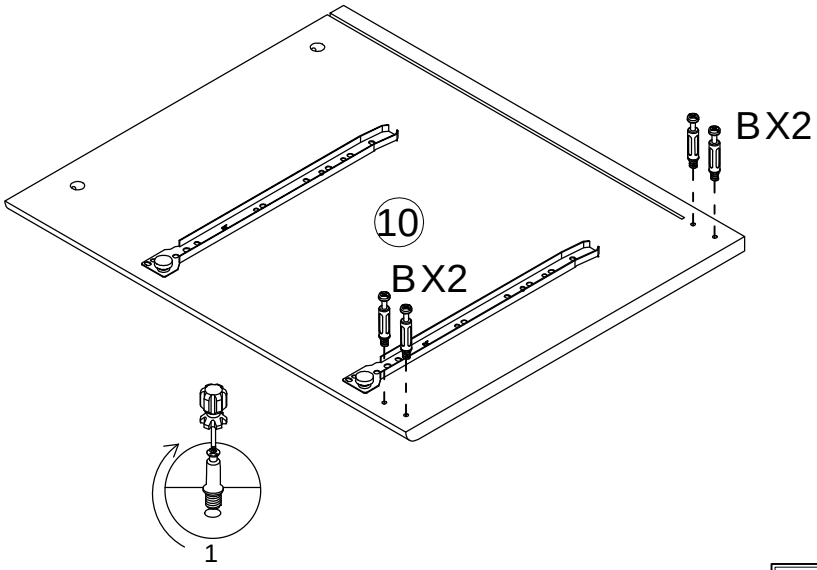

B ST6*40

X4

STEP 3

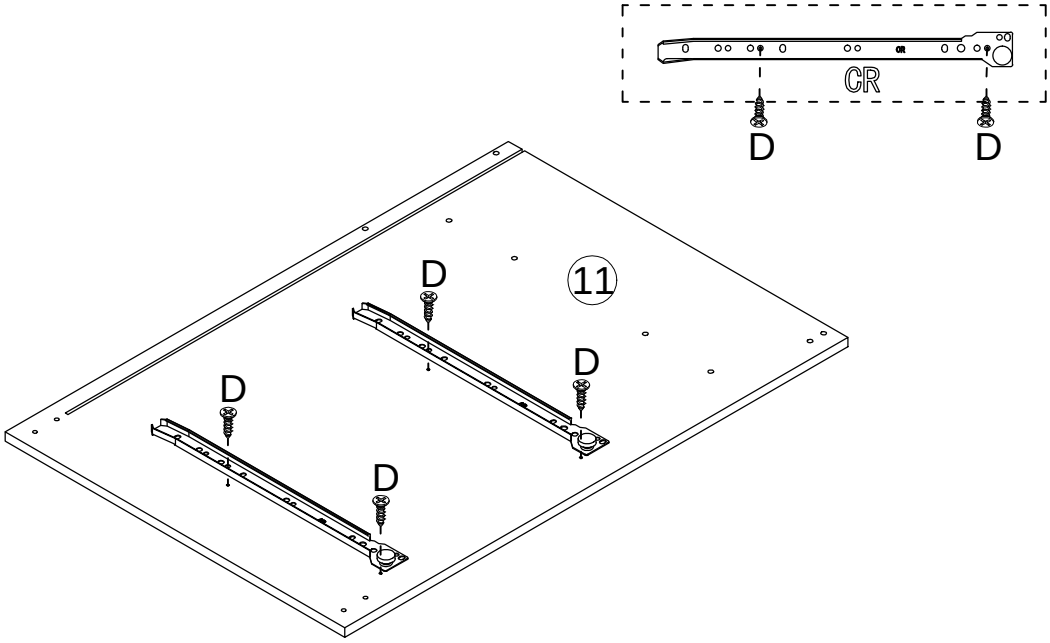

D ST3.5*12	CR
X4	X2

STEP 4

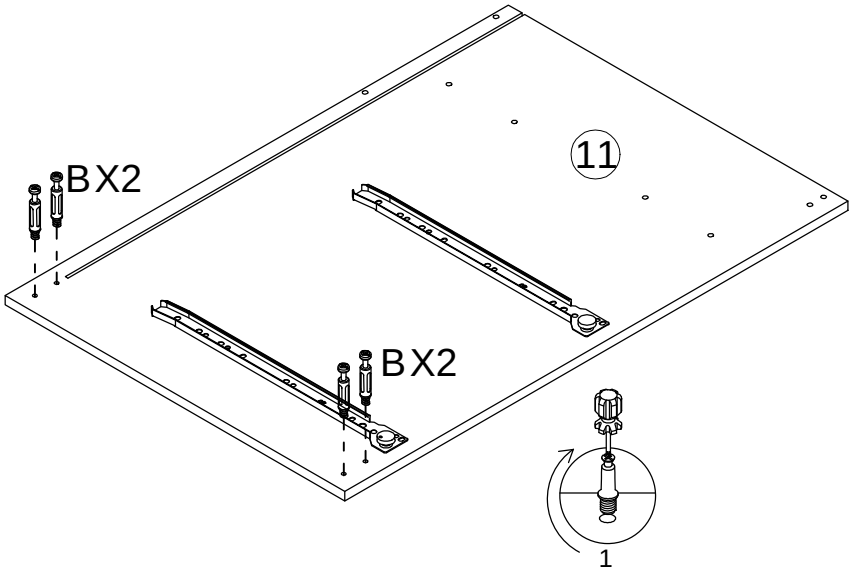

B ST6*40

X4

STEP 5

Pay attention to the direction of the pull slot

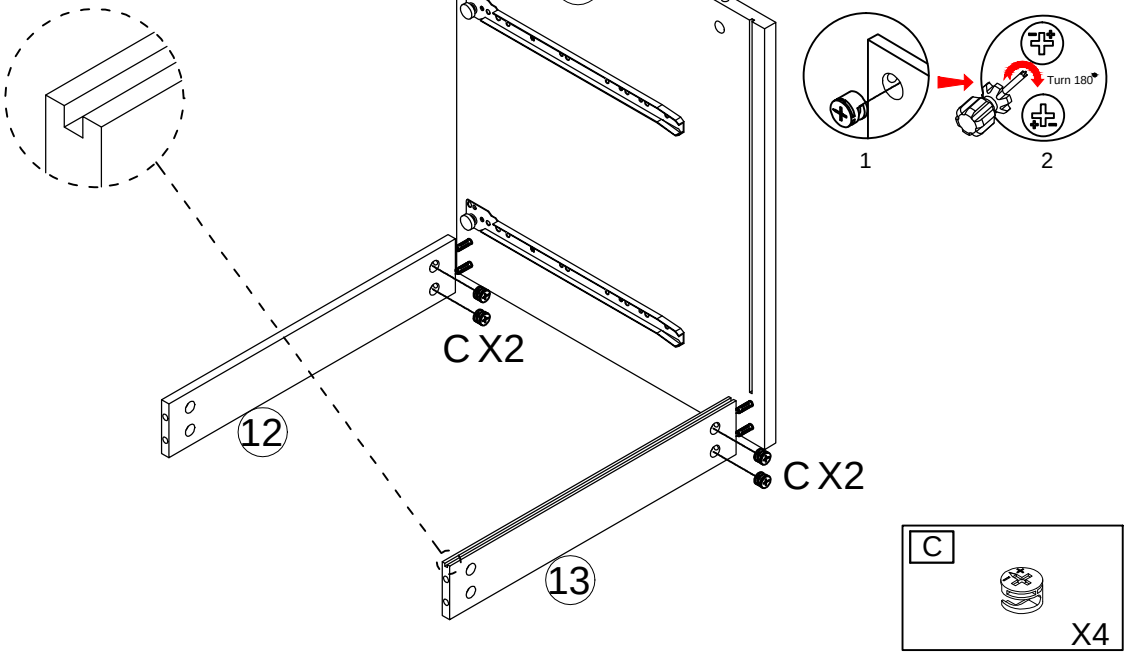

STEP 6

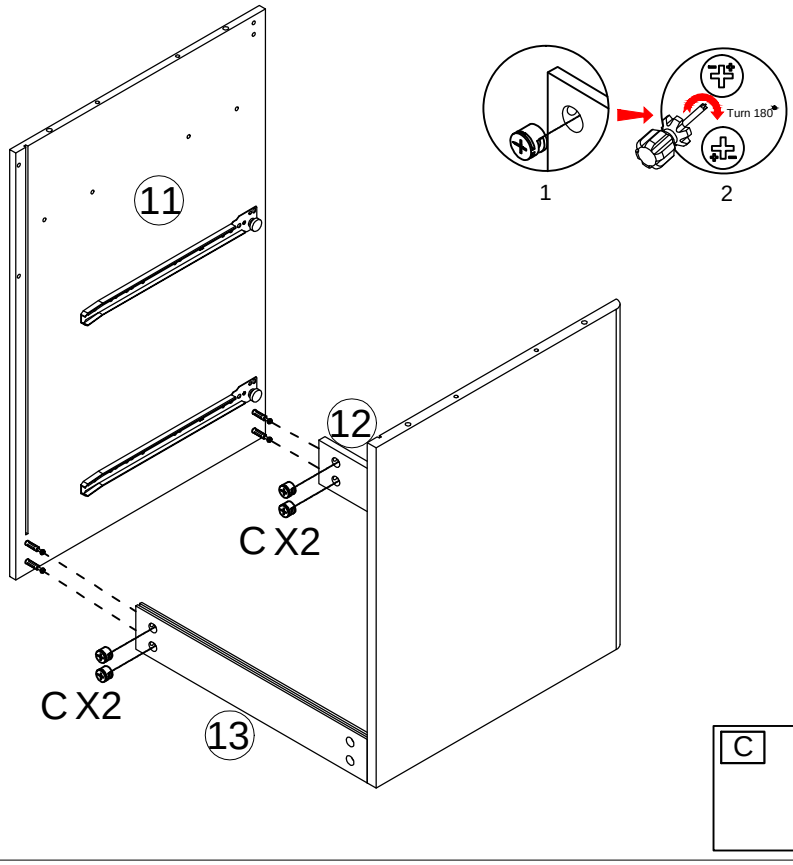

STEP 7

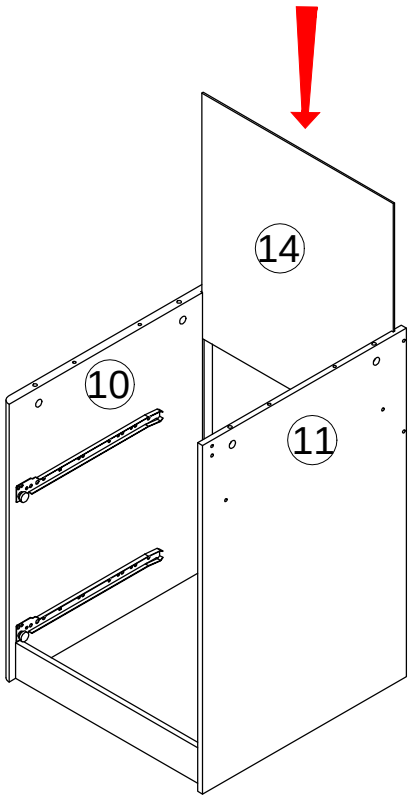

STEP 8

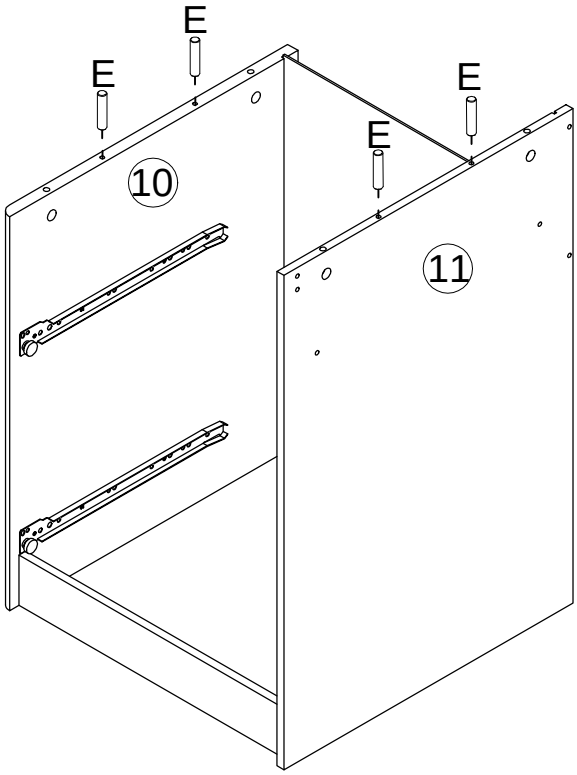

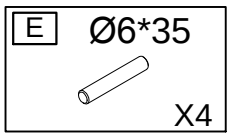

STEP 9

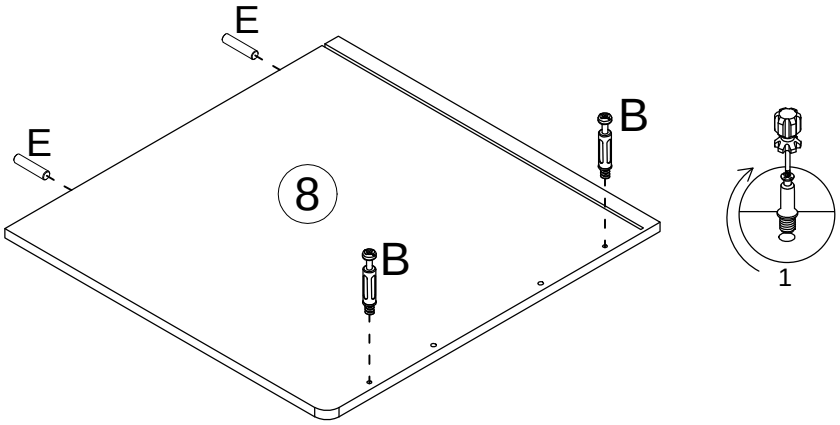

E	B
Ø6*35 X2	ST6*40 X2

STEP 10

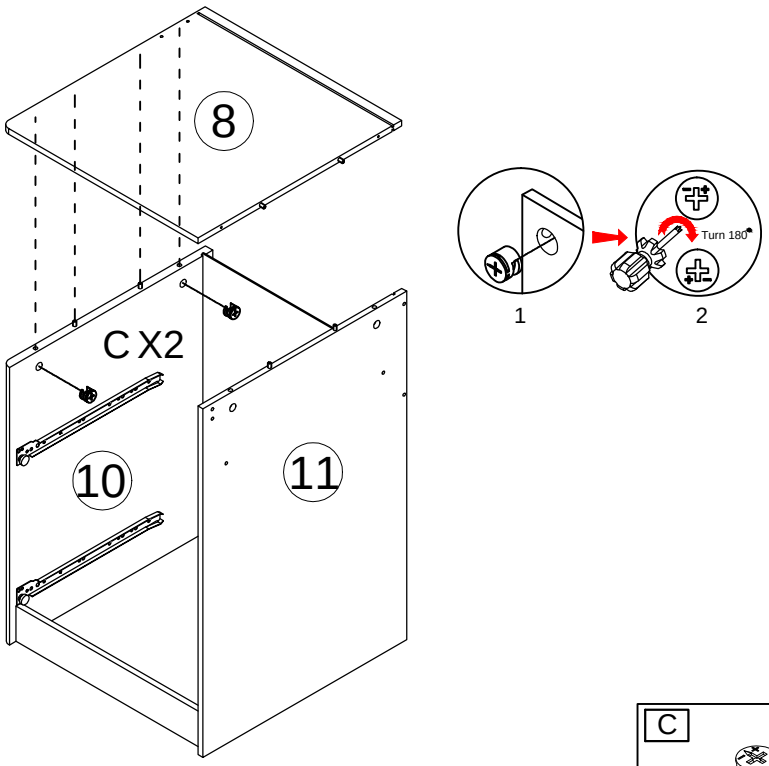

C X2

STEP 11

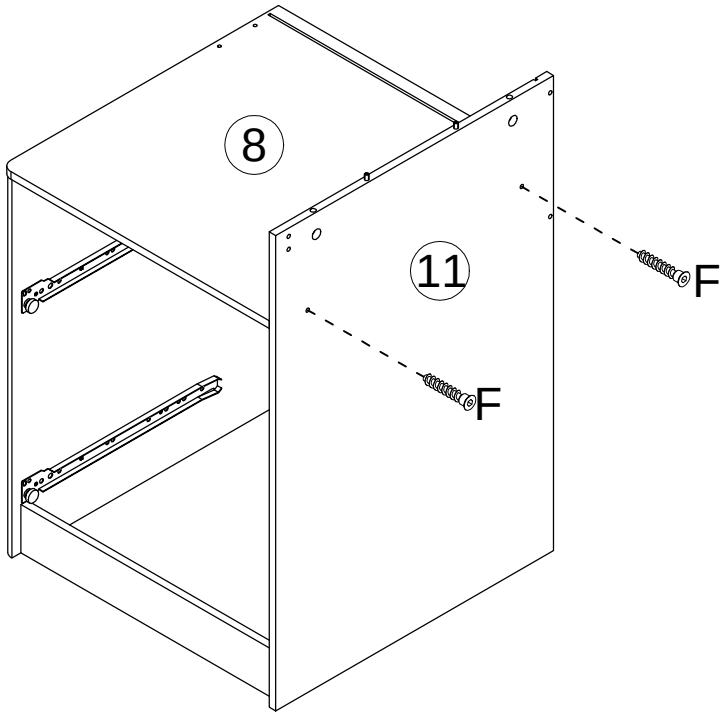

F	ST5*40 X2

STEP 12

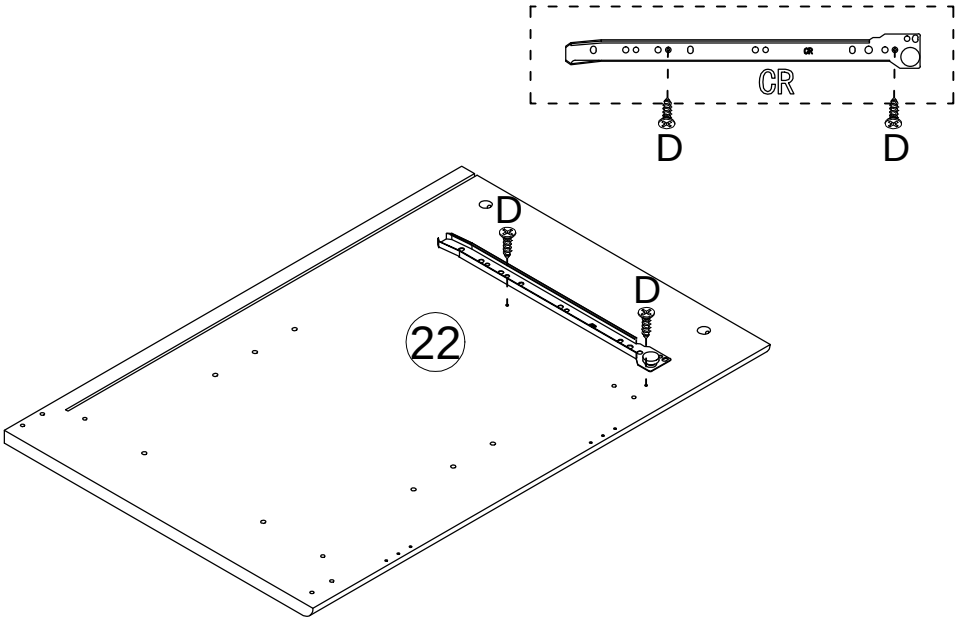

D	ST3.5*12 X2	CR	X1

STEP 13

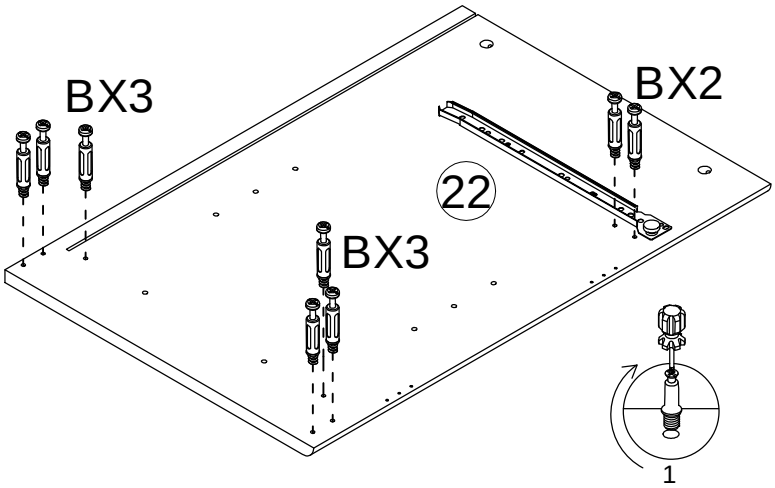

B ST6*40

X8

STEP 14

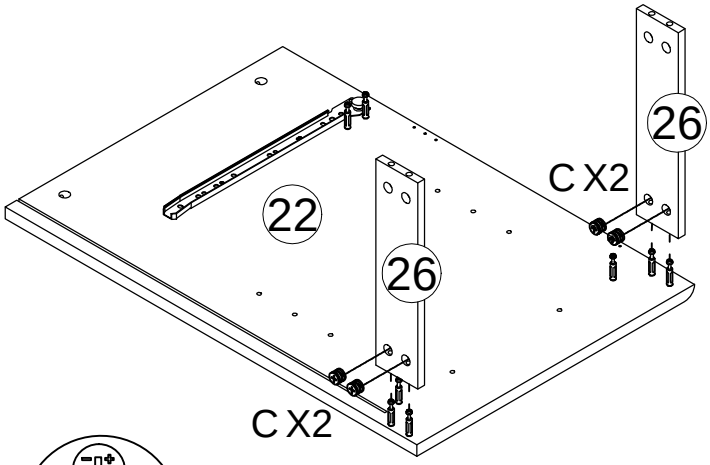

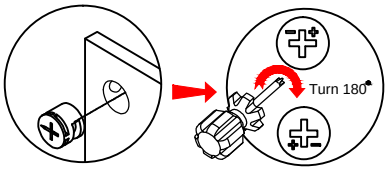

C

X4

STEP 15

We need to divide accessoryK into two.

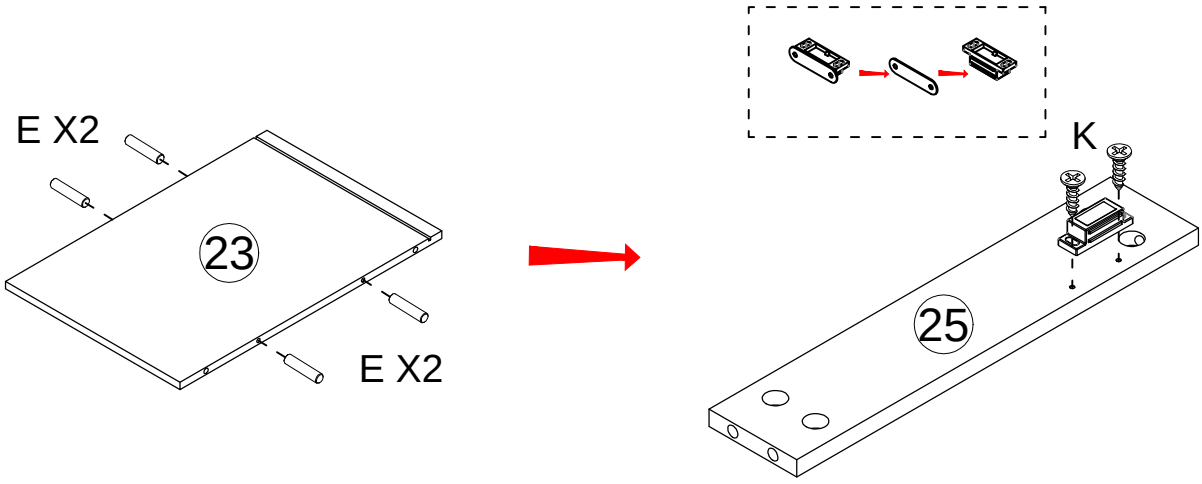

E	Ø6*35	X4	K	ST3*14	X1	X2

STEP 16

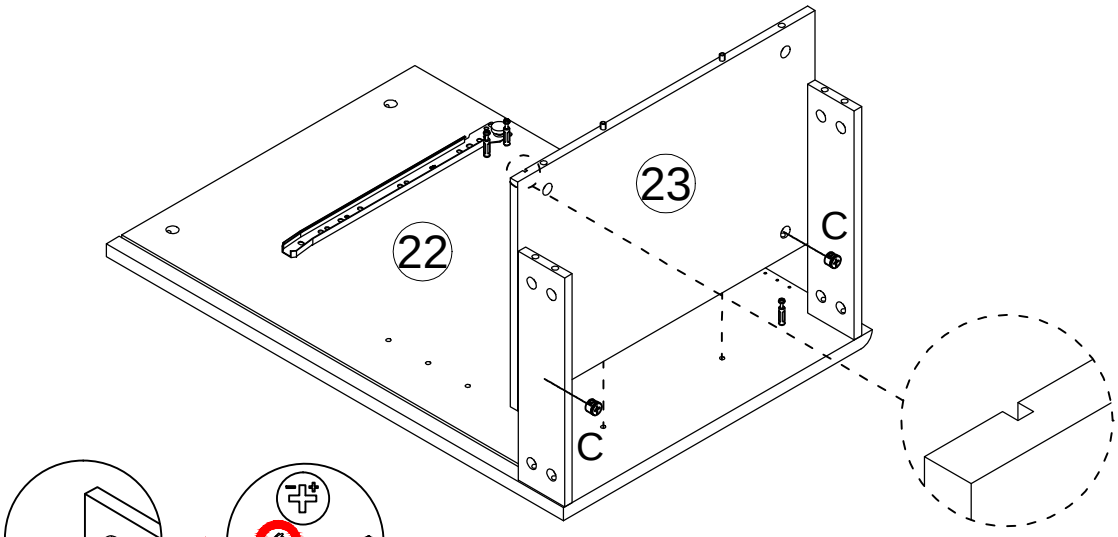

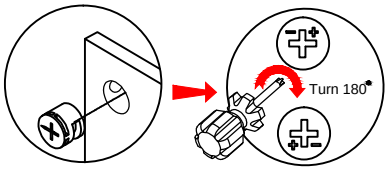

Pay attention to the direction of the pull slot

C	X2

STEP 17

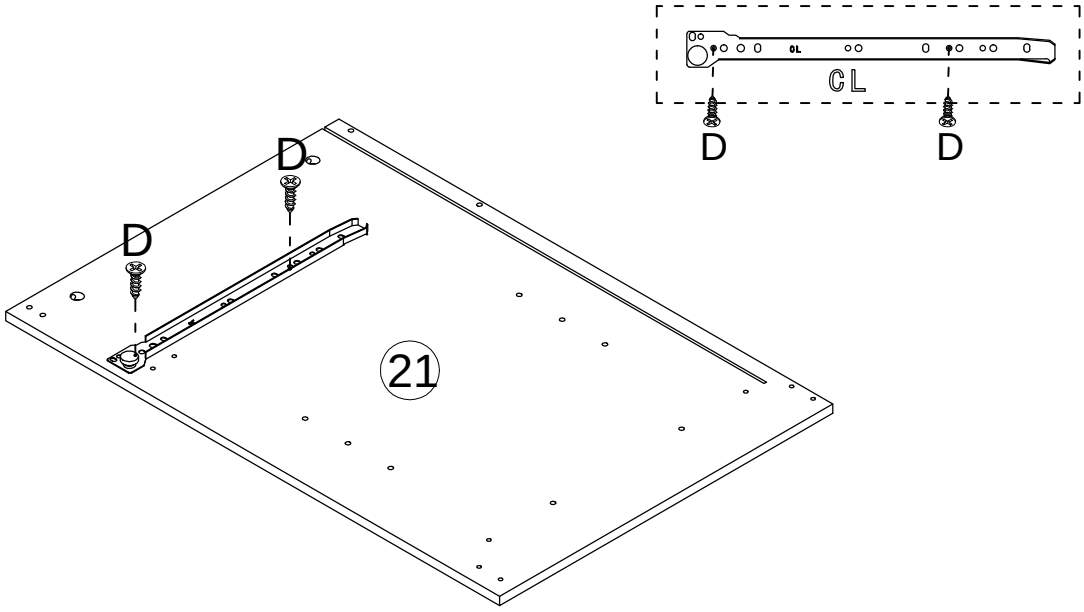

D ST3.5*12	CL
X2	X1

STEP 18

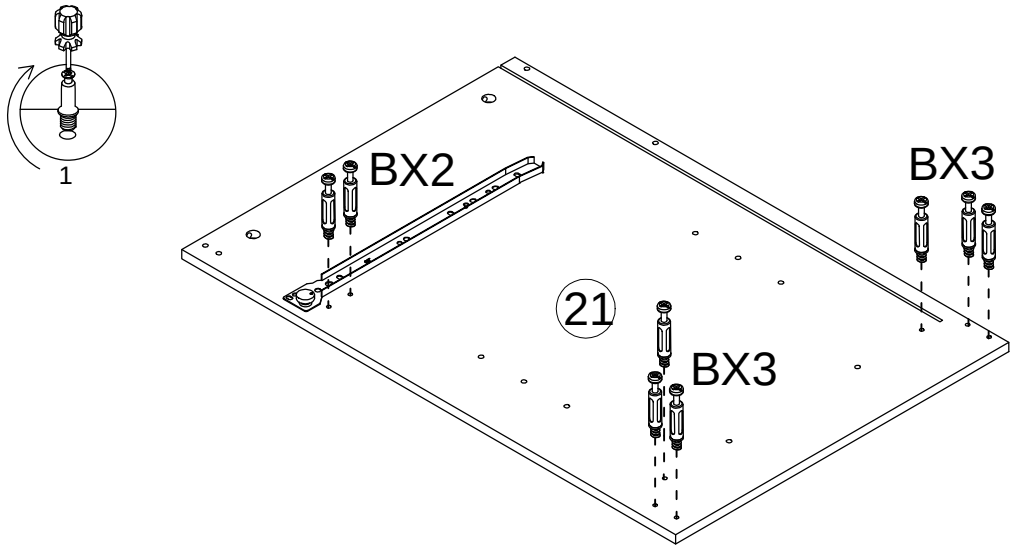

B ST6*40
X8

STEP 19

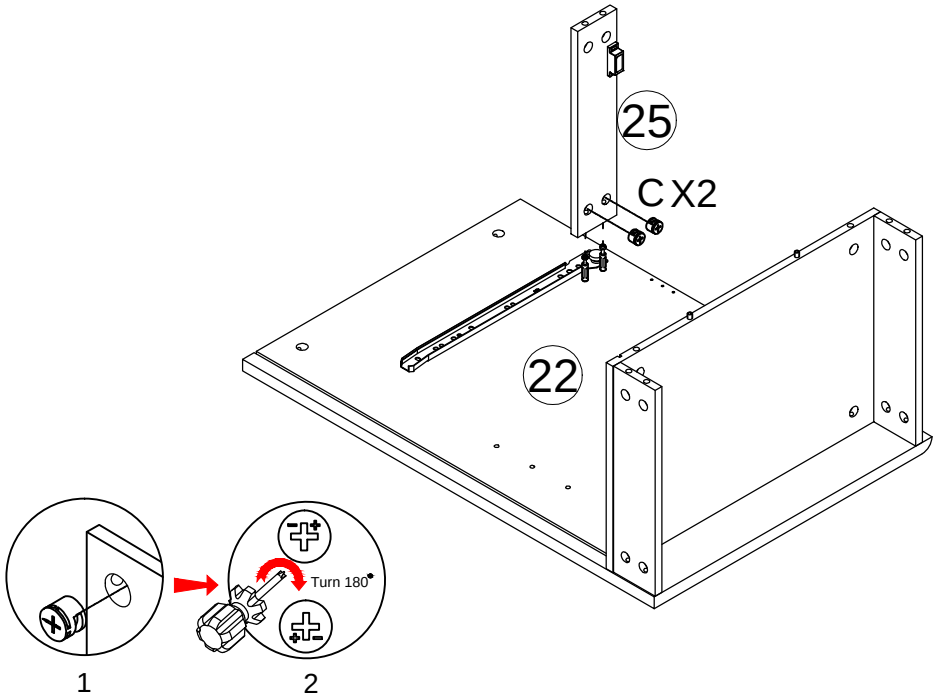

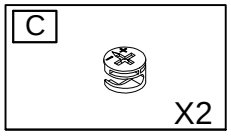

STEP 20

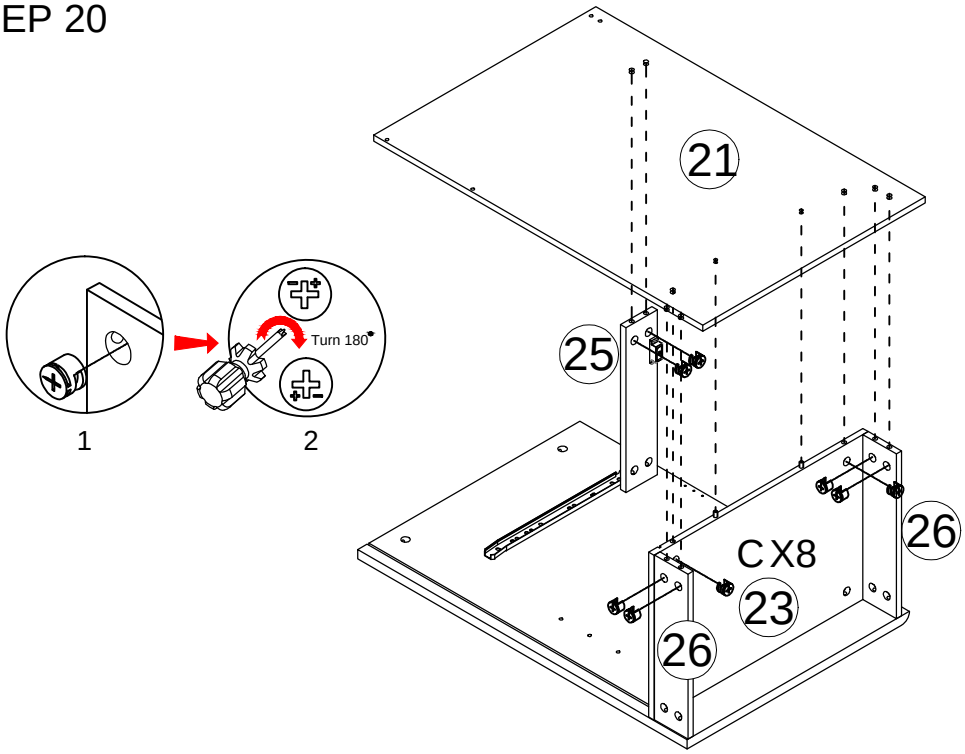

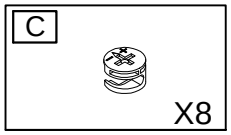

STEP 21

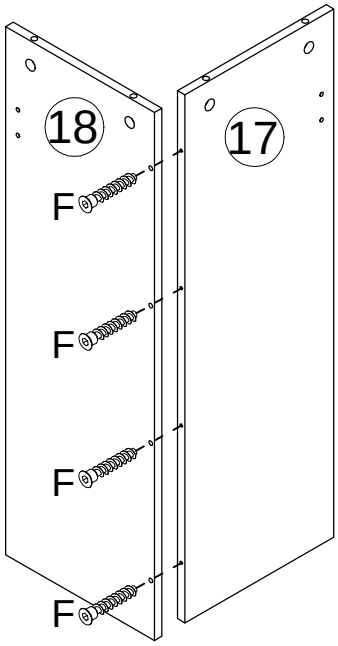

F ST5*40 X4

STEP 22

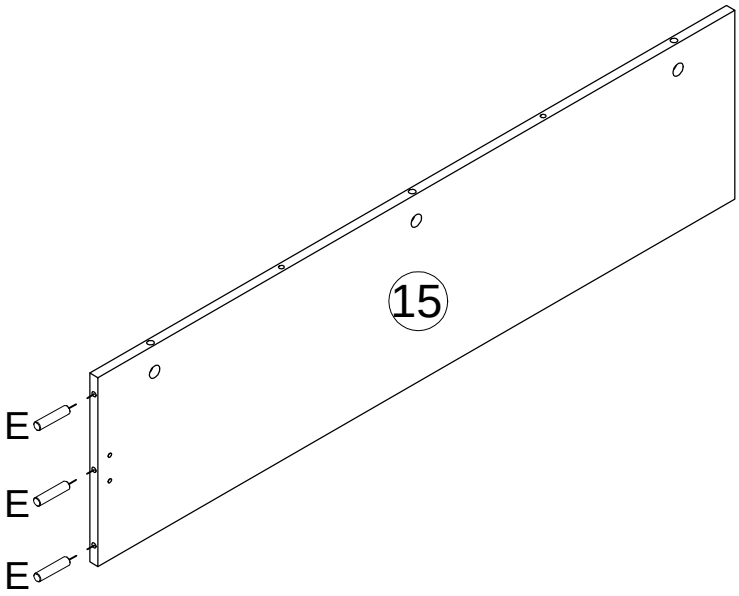

E Ø6*35 X3

STEP 23

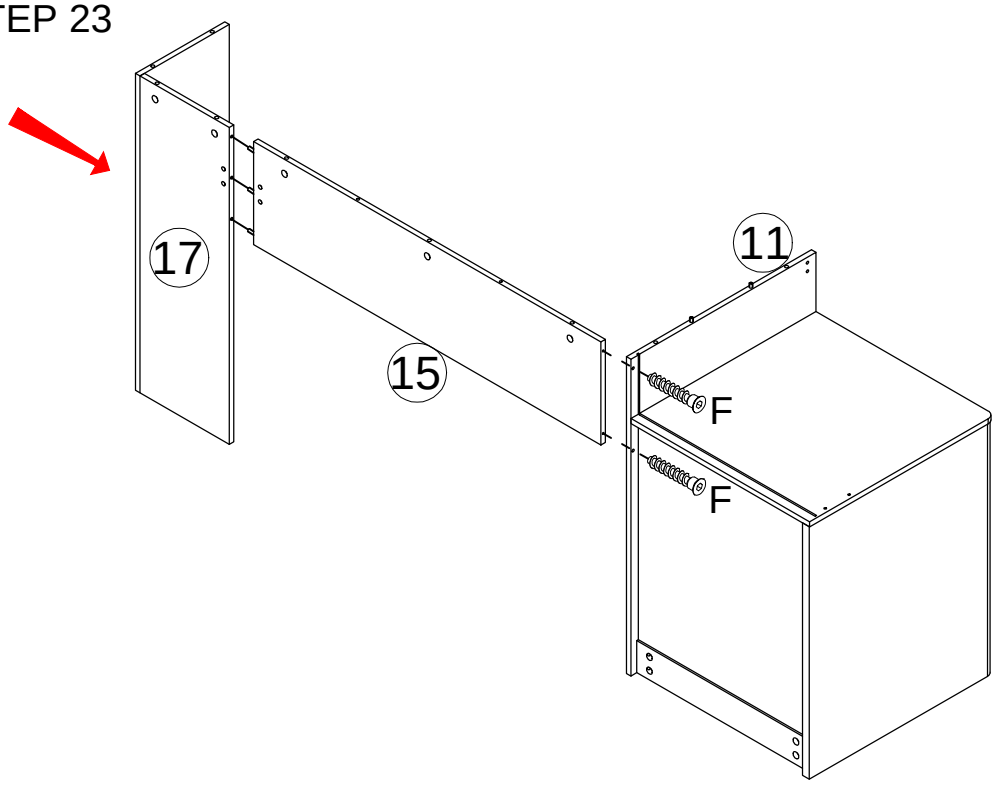

F ST5*40 X2

STEP 24

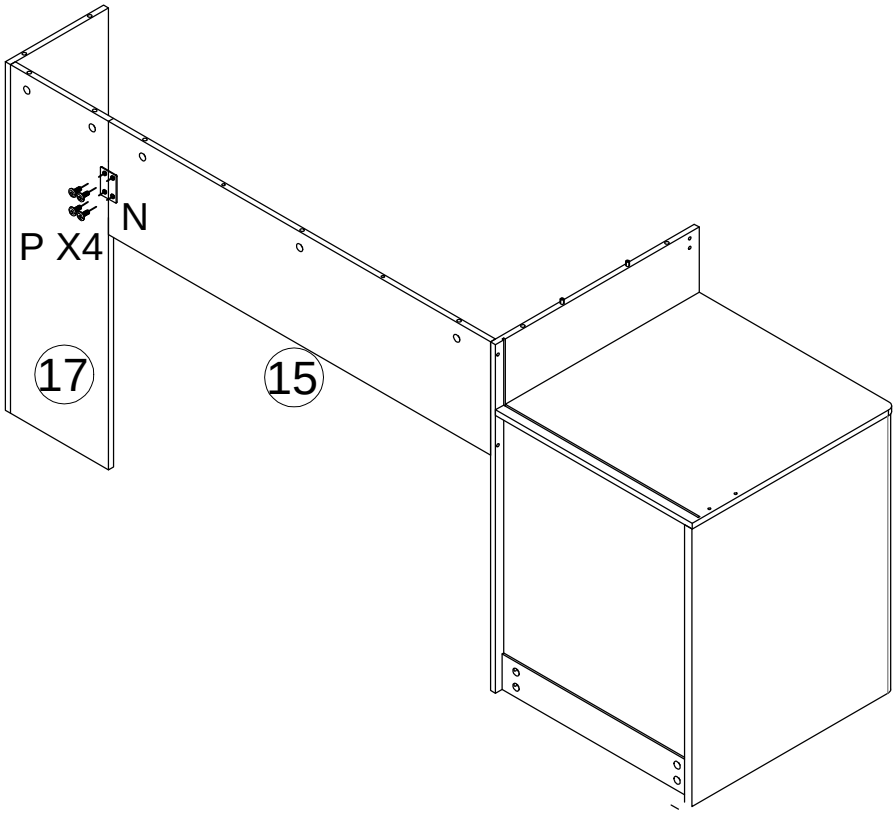

N X1

P M6*10 X4

STEP 25

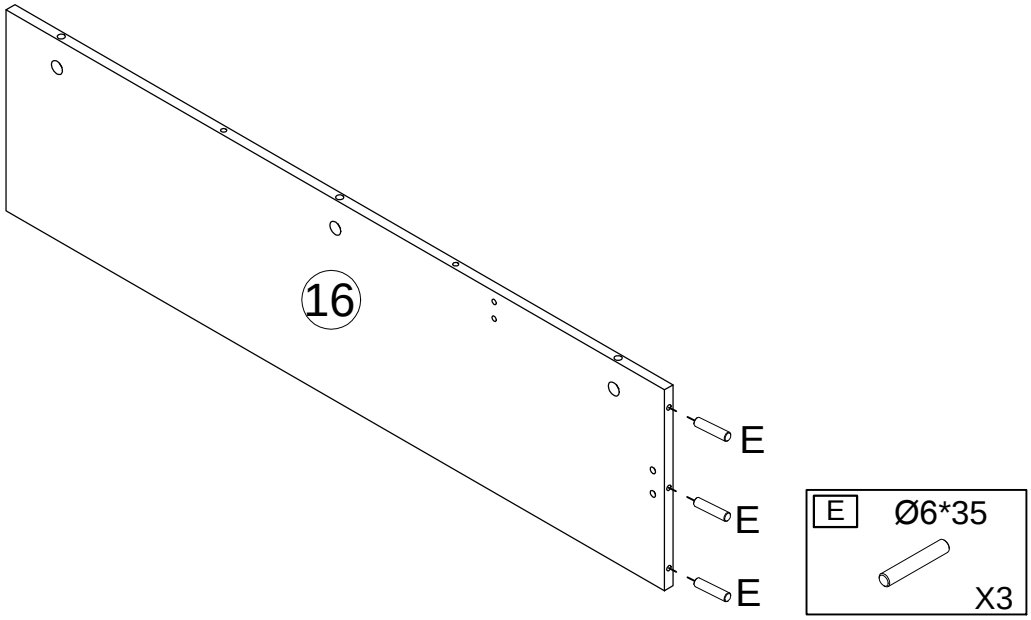

STEP 26

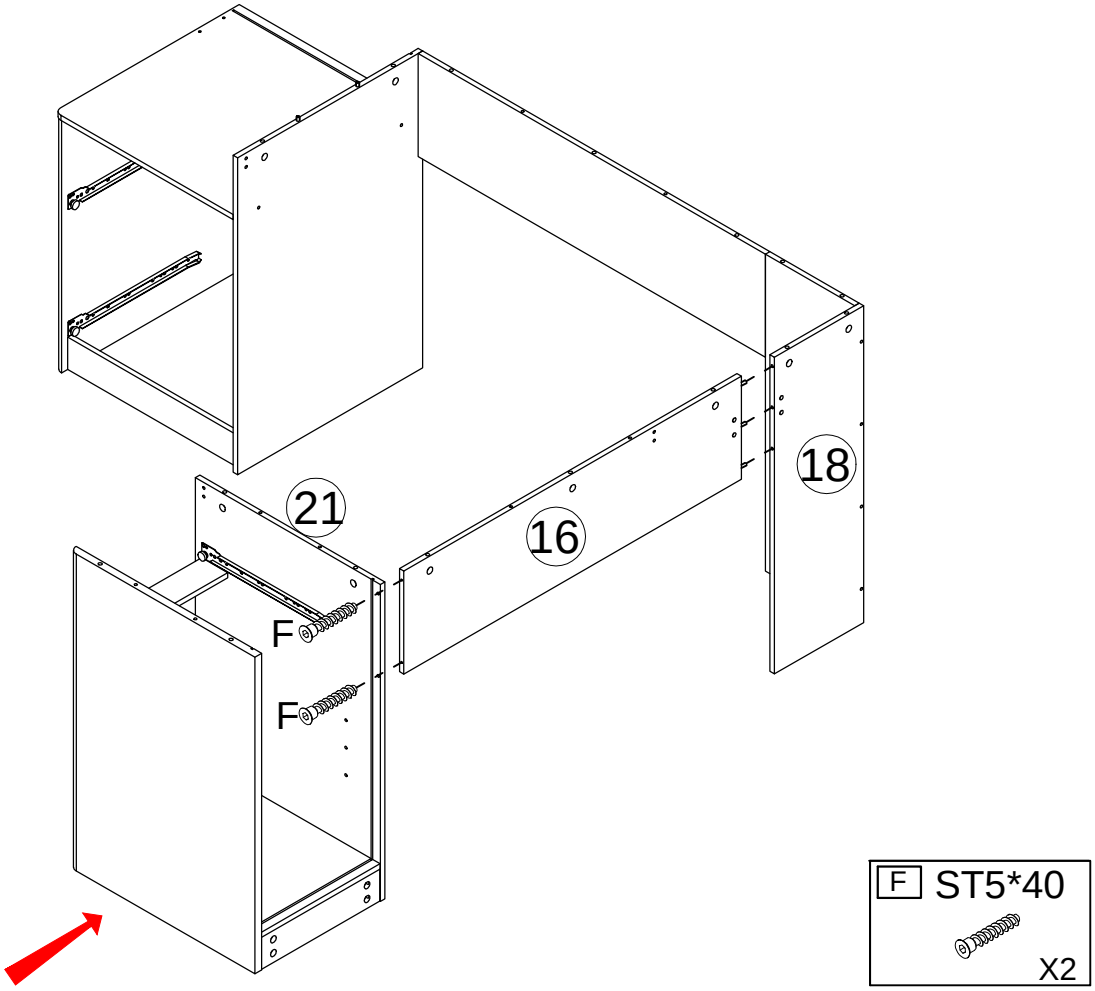

STEP 27

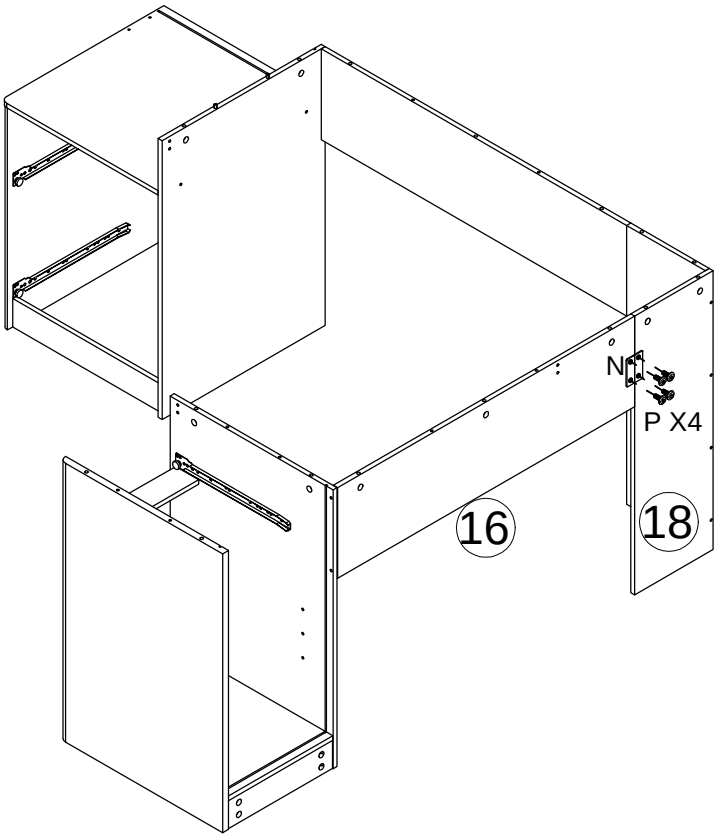

N		X1
P	M6X*10	X4

STEP 28

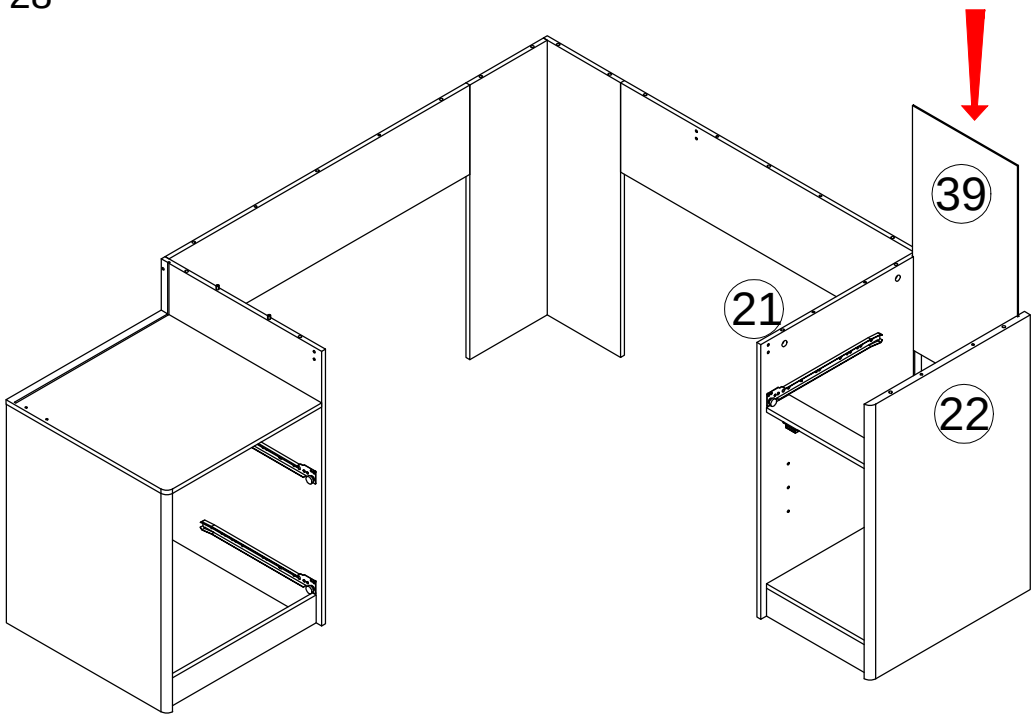

STEP 29

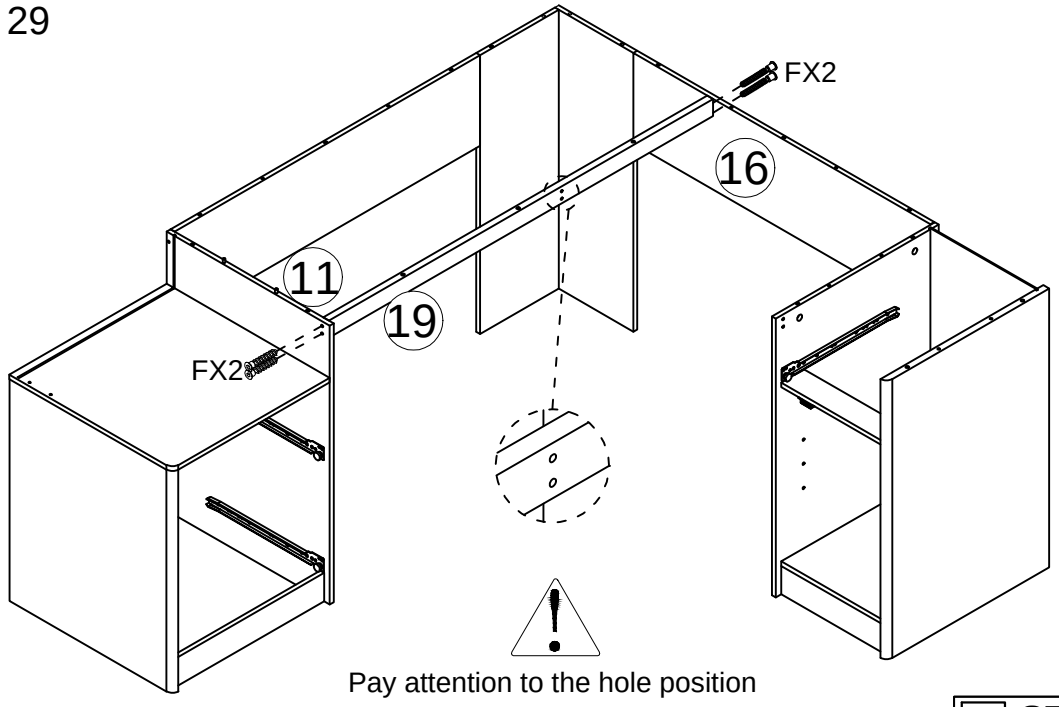

F ST5*40

X4

STEP 30

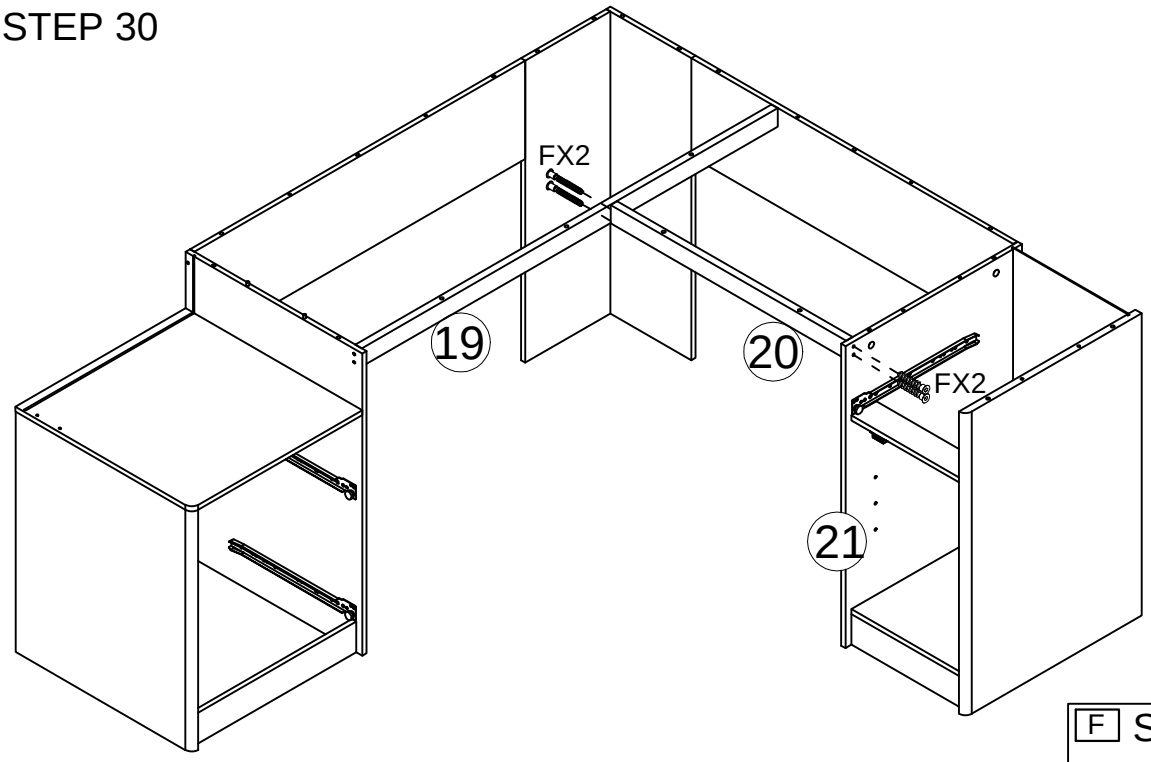

F ST5*40

X4

STEP 31

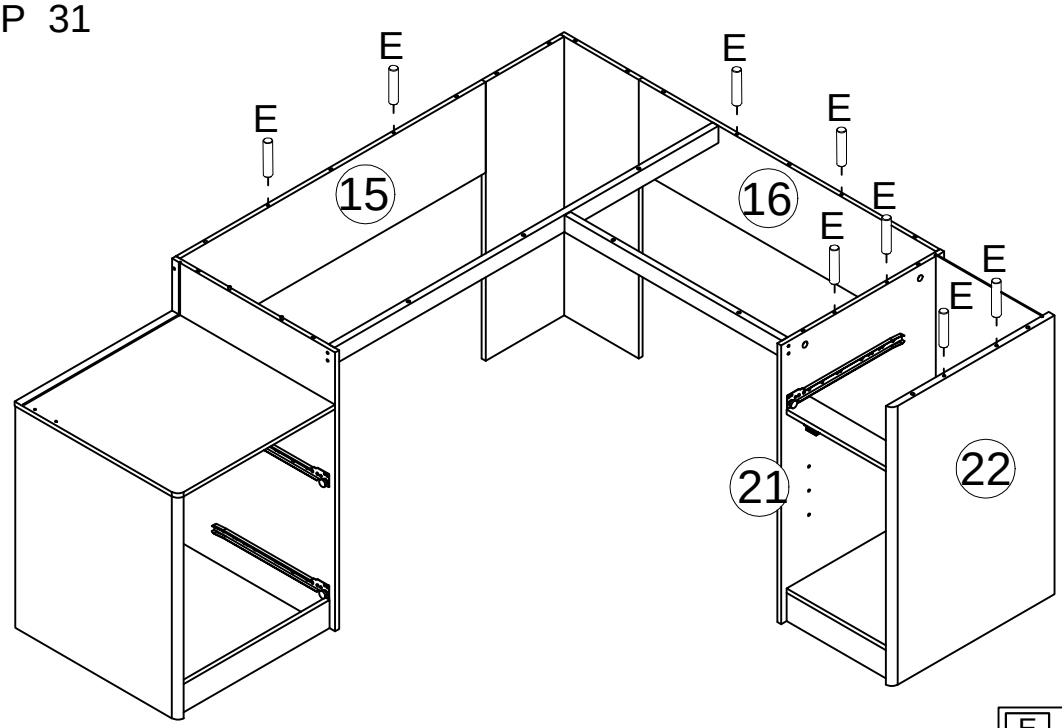

E	Ø6*35 X8

STEP 32

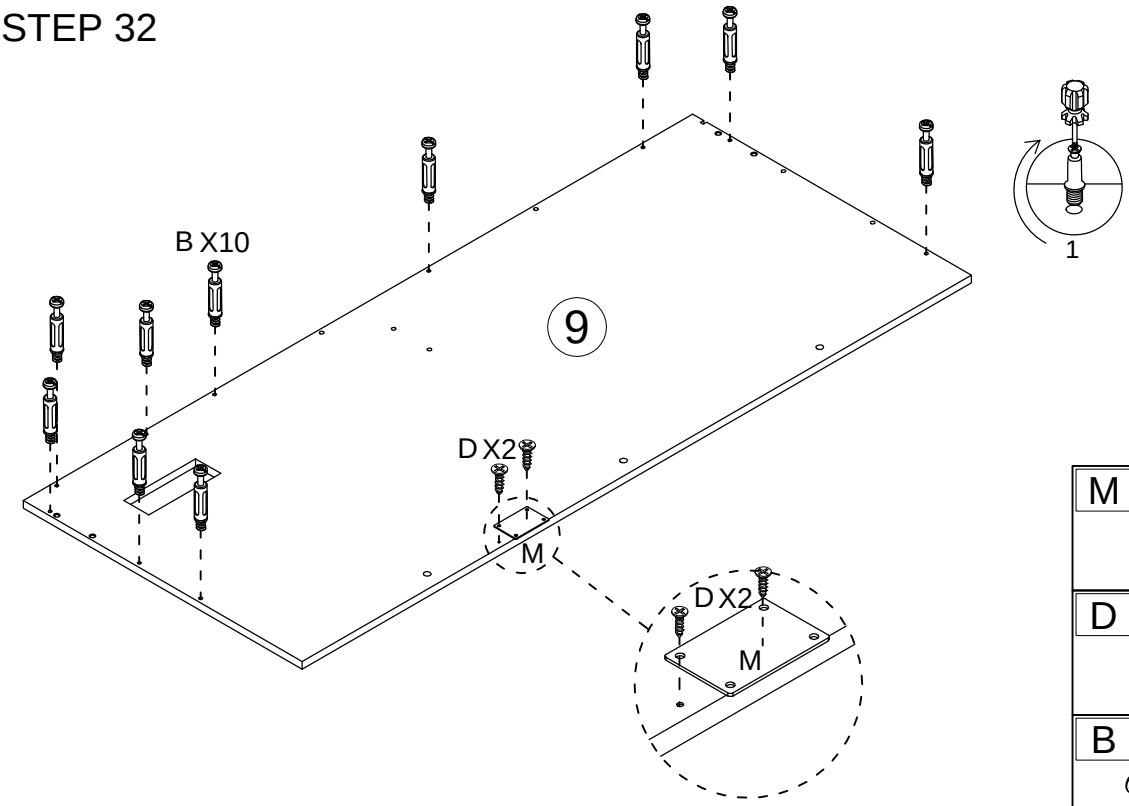

M	X1
D	ST3.5*12 X2
B	ST6*40 X10

STEP 33

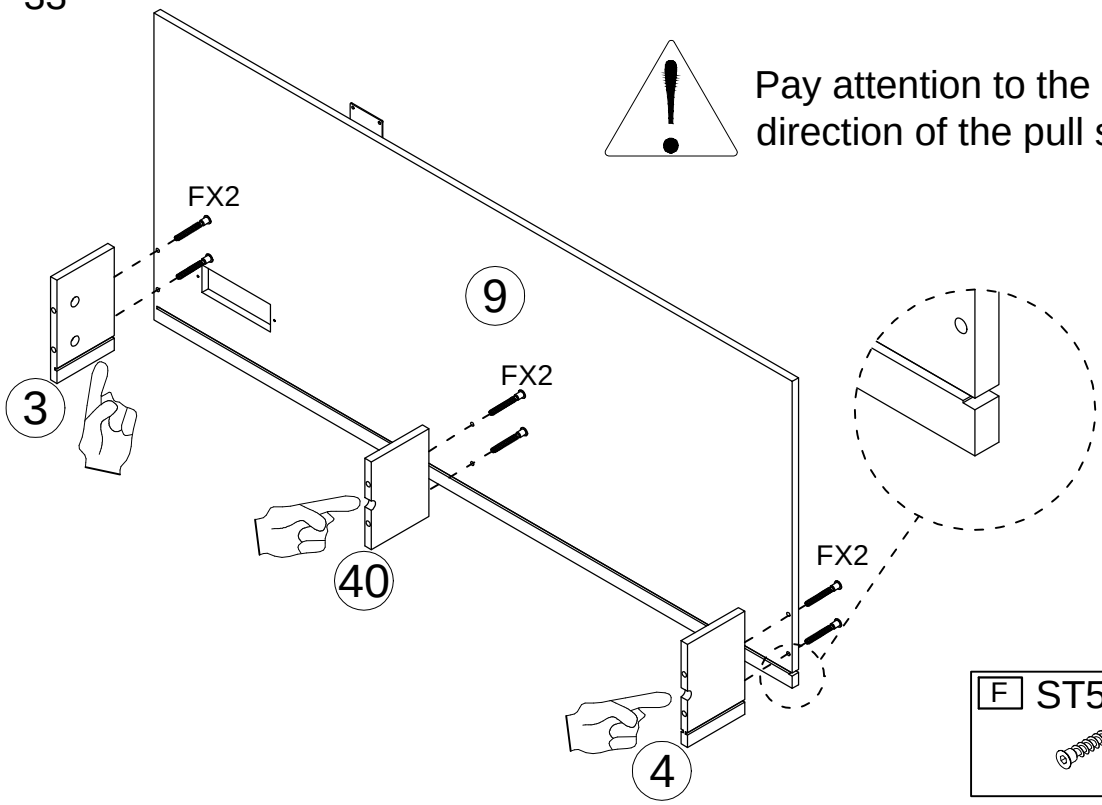

F ST5*40 X6

STEP 34

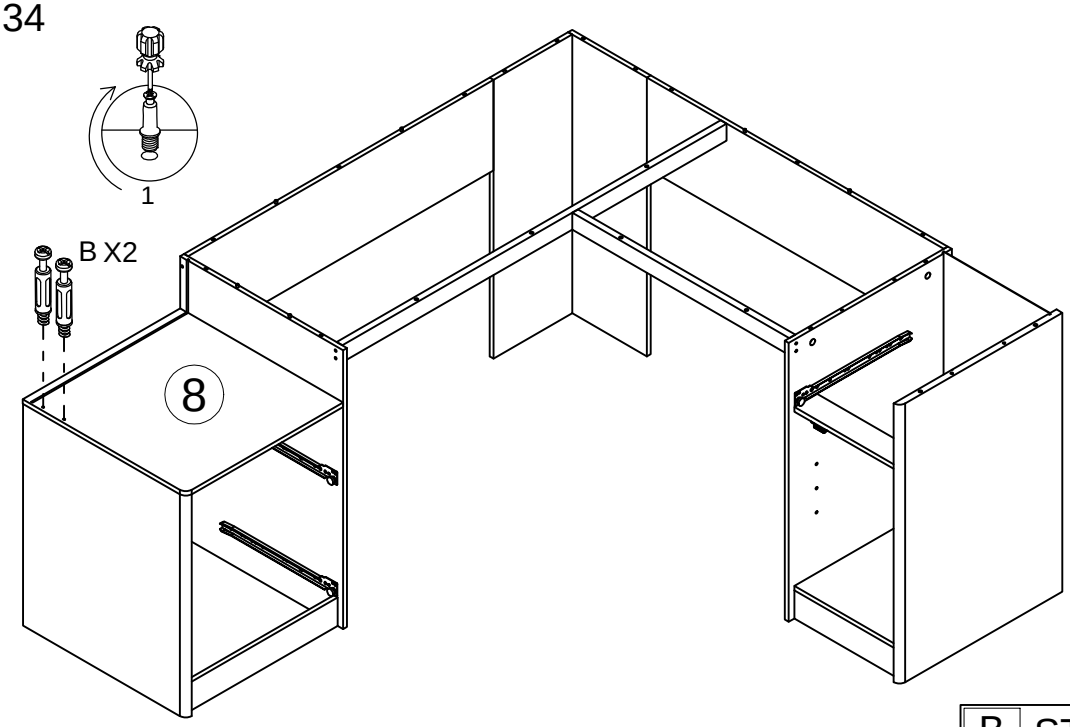

B ST6*40 X2

STEP 35

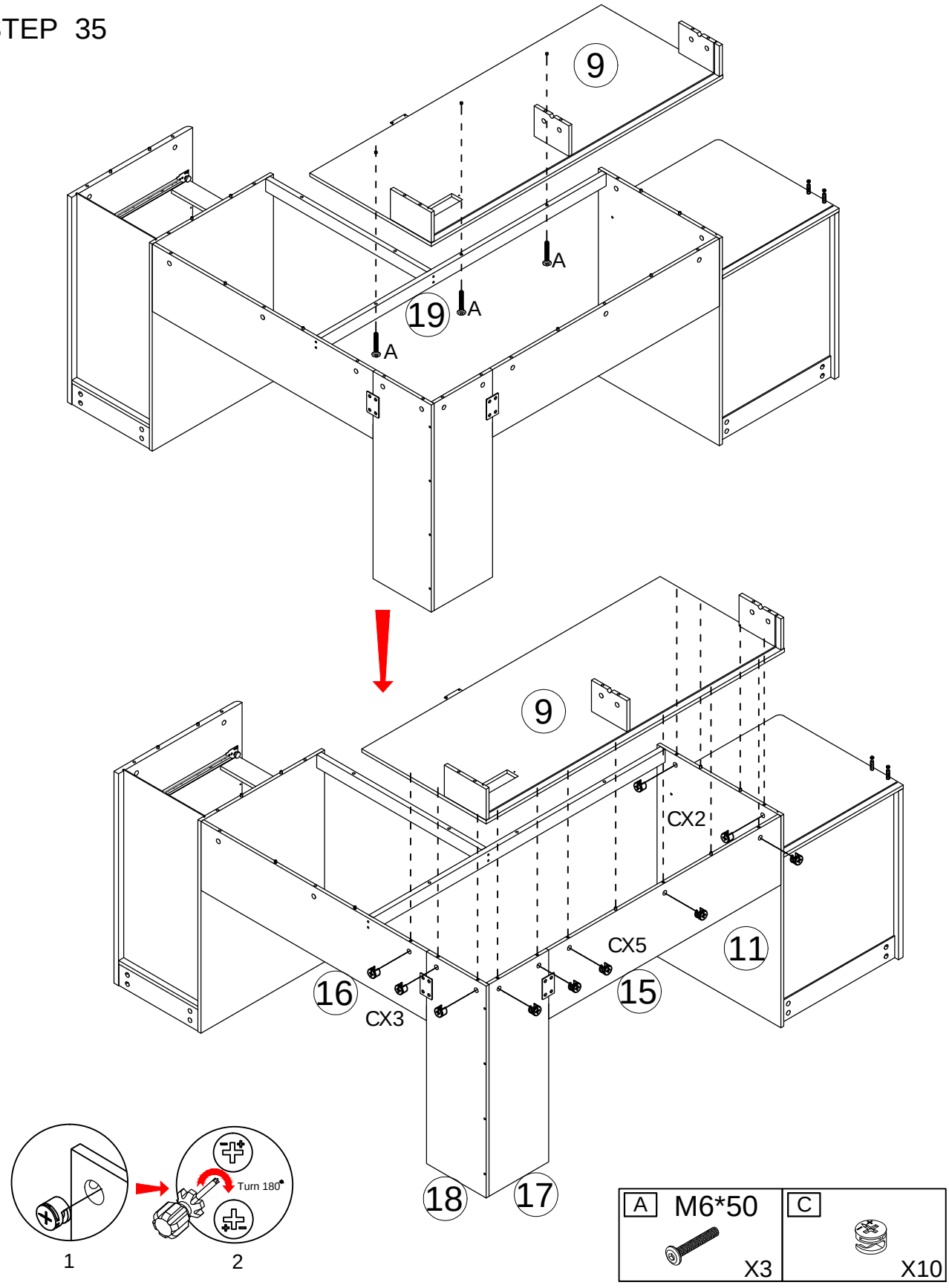

STEP 36

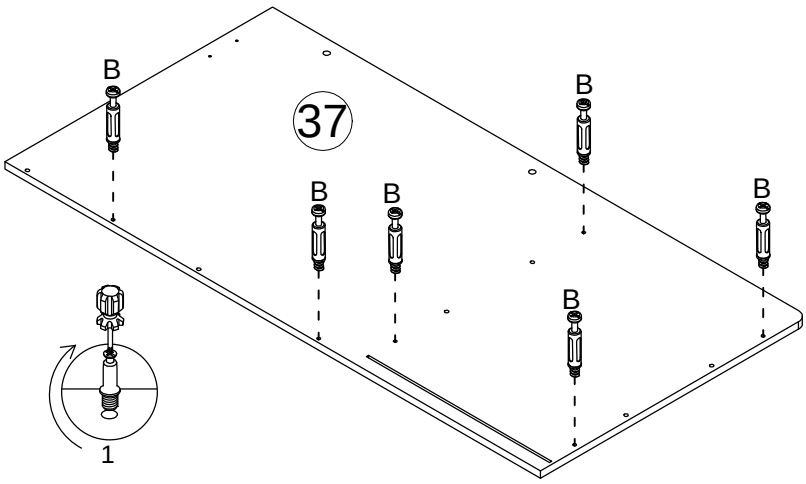

B ST6*40 X6

STEP 37

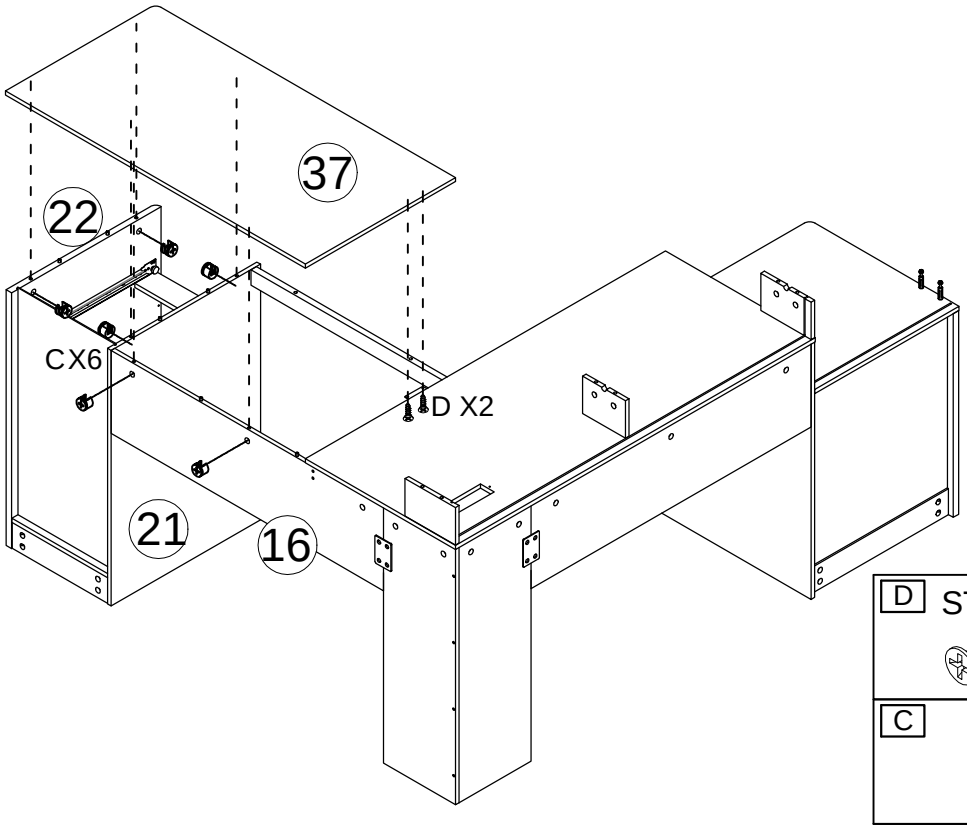

D ST3.5*12 X2

C X6

STEP 38

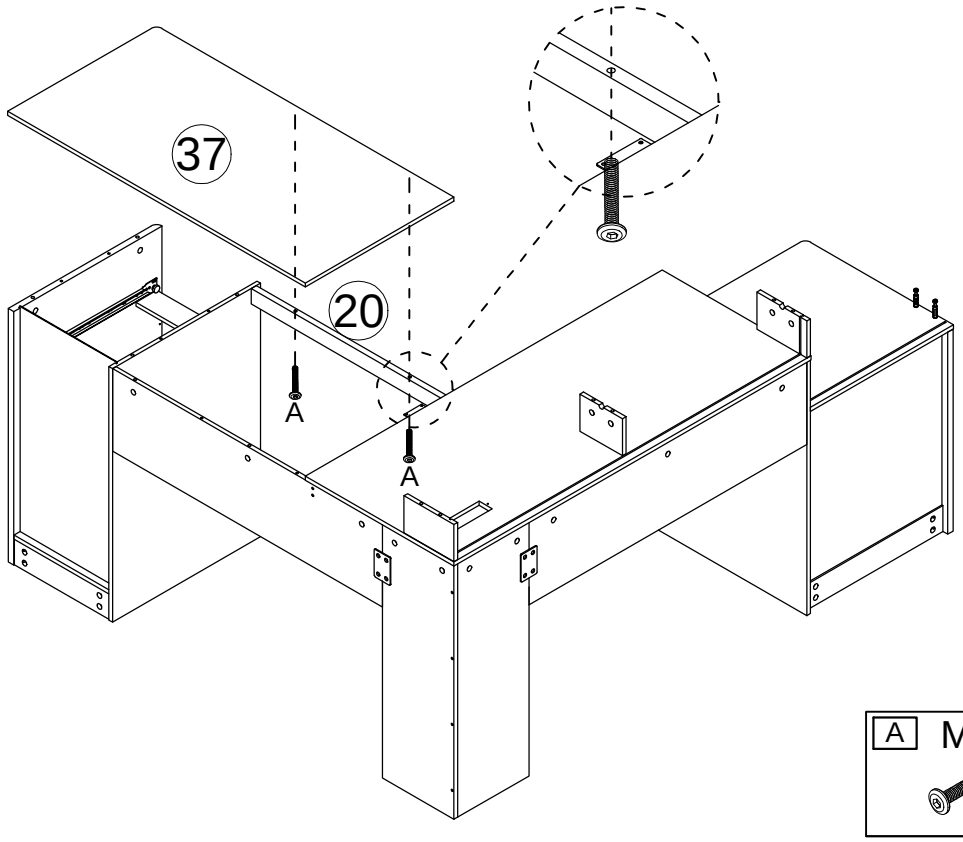

A M6*50 X2

STEP 39

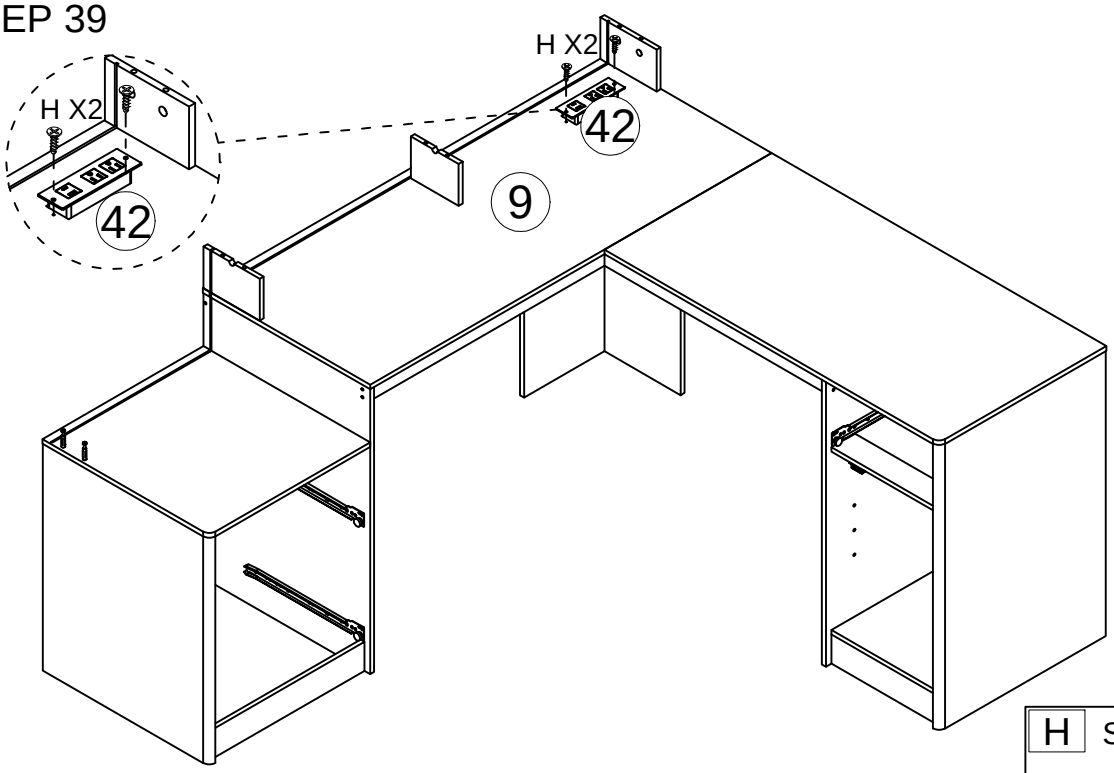

H ST3.5*14 X2

STEP 40

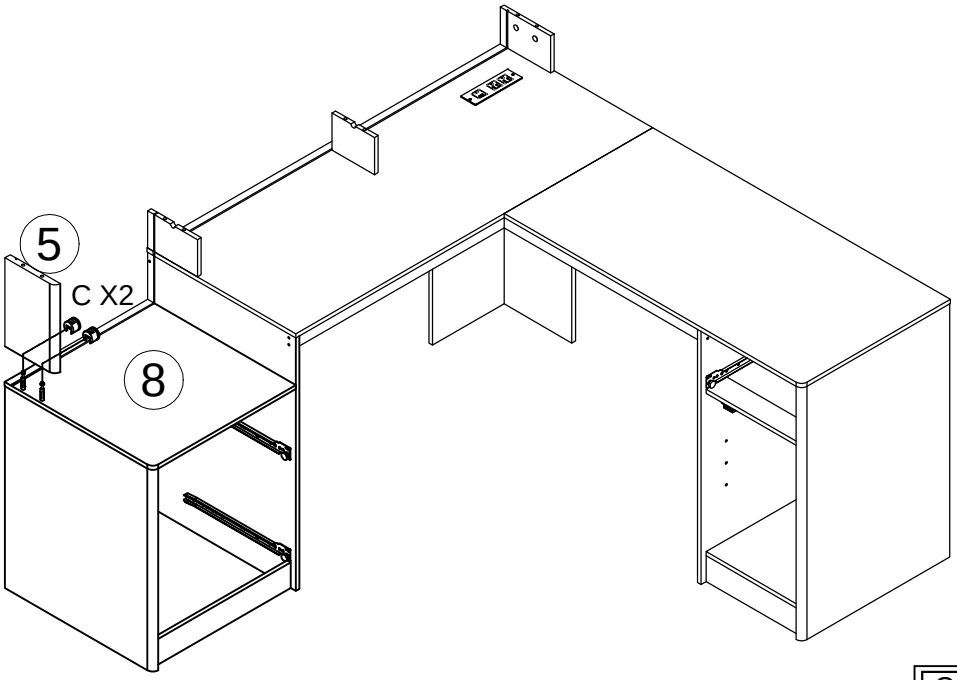

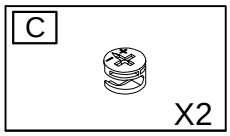

STEP 41

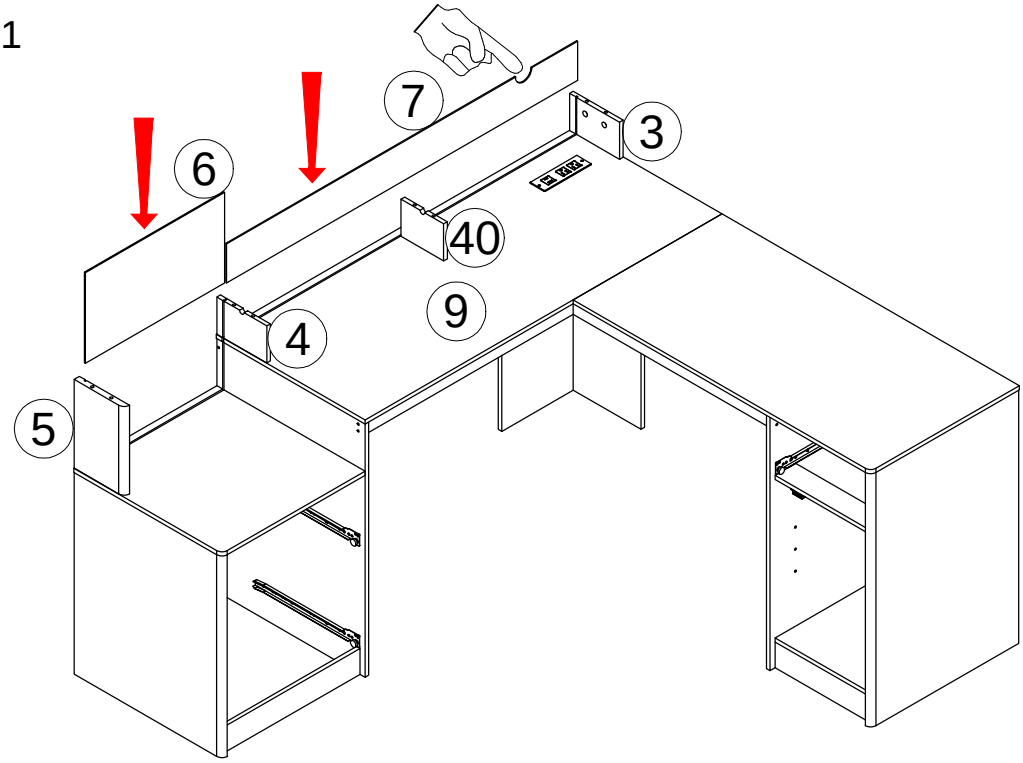

STEP 42

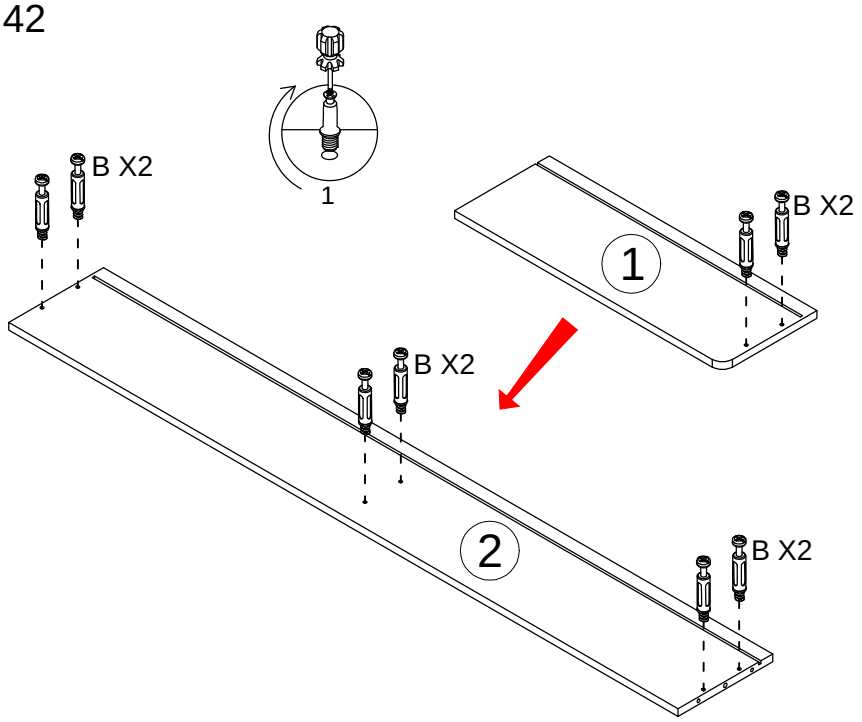

B ST6*40 X8

STEP 43

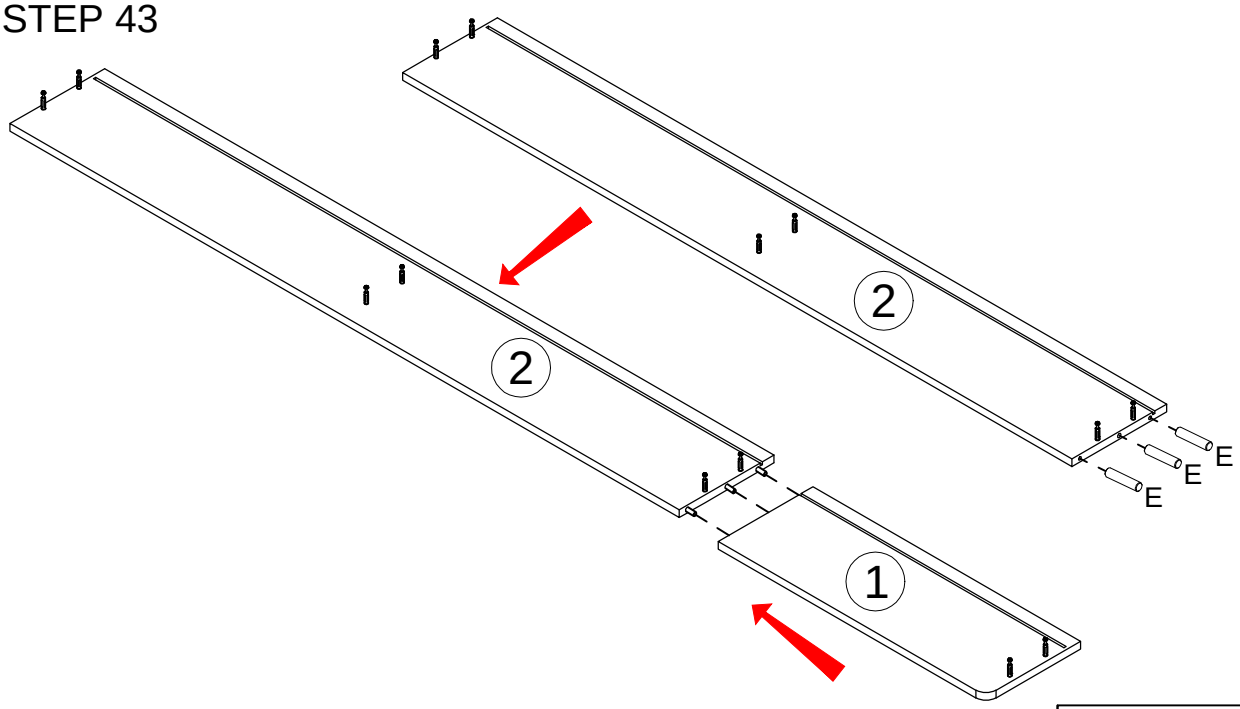

E Ø6*35 X3

STEP 44

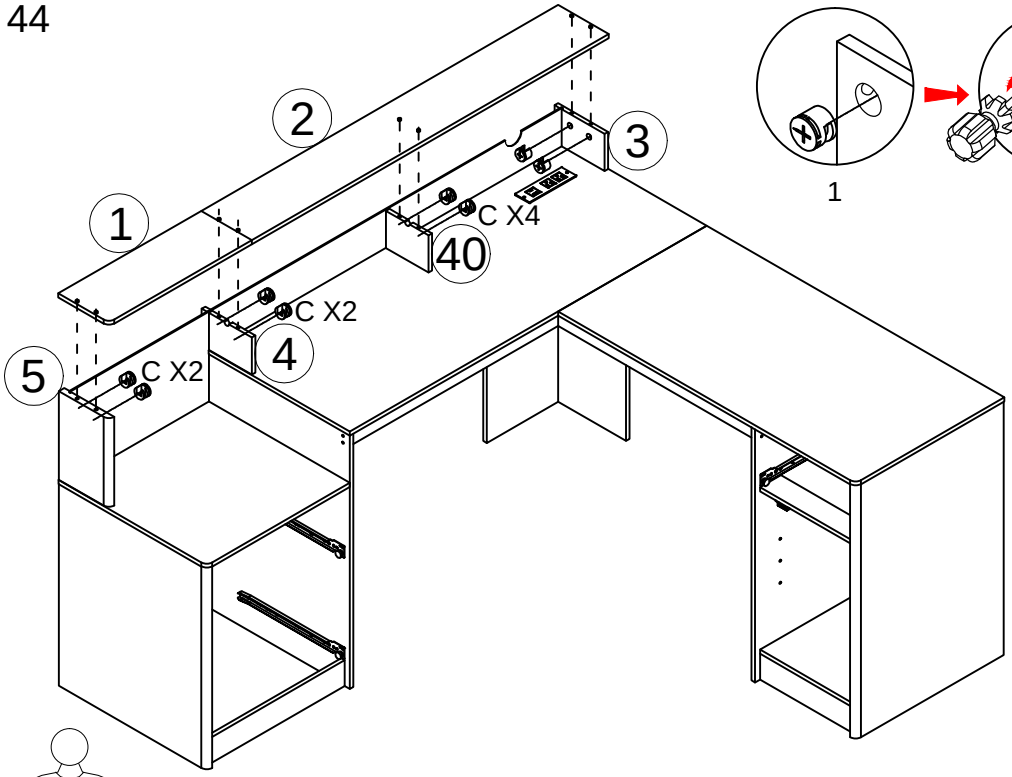

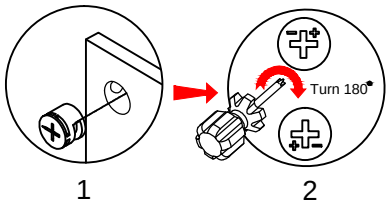

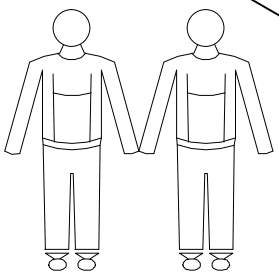

This step requires two people to operate when flipping.

C

X8

STEP 45

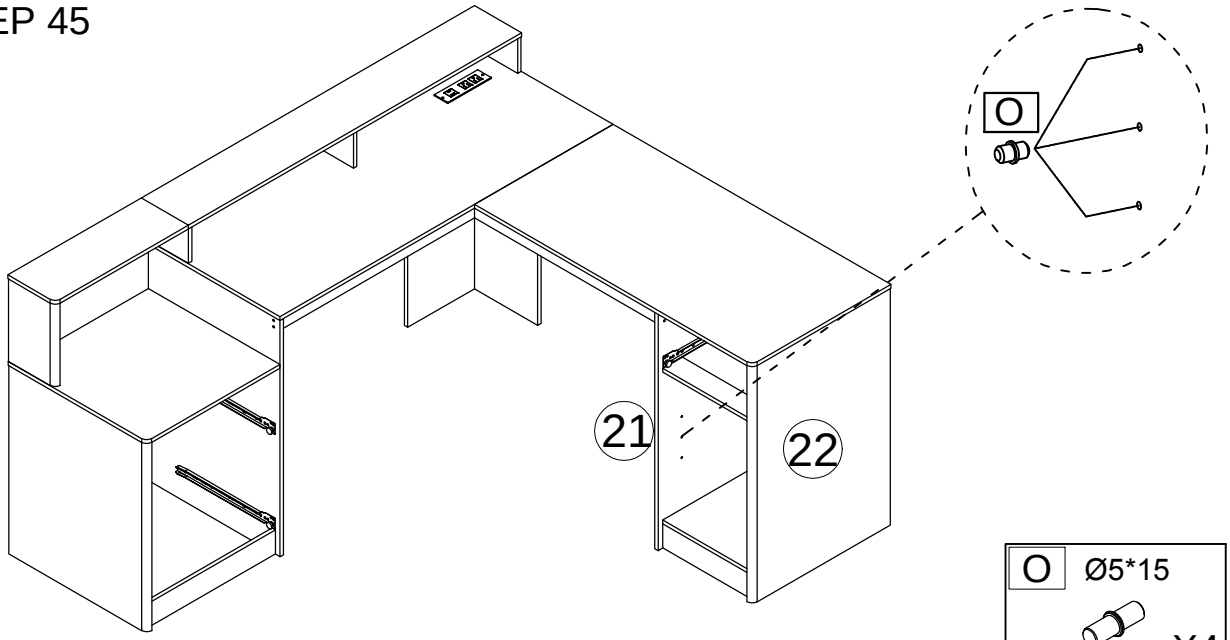

O Ø5*15

X4

STEP 46

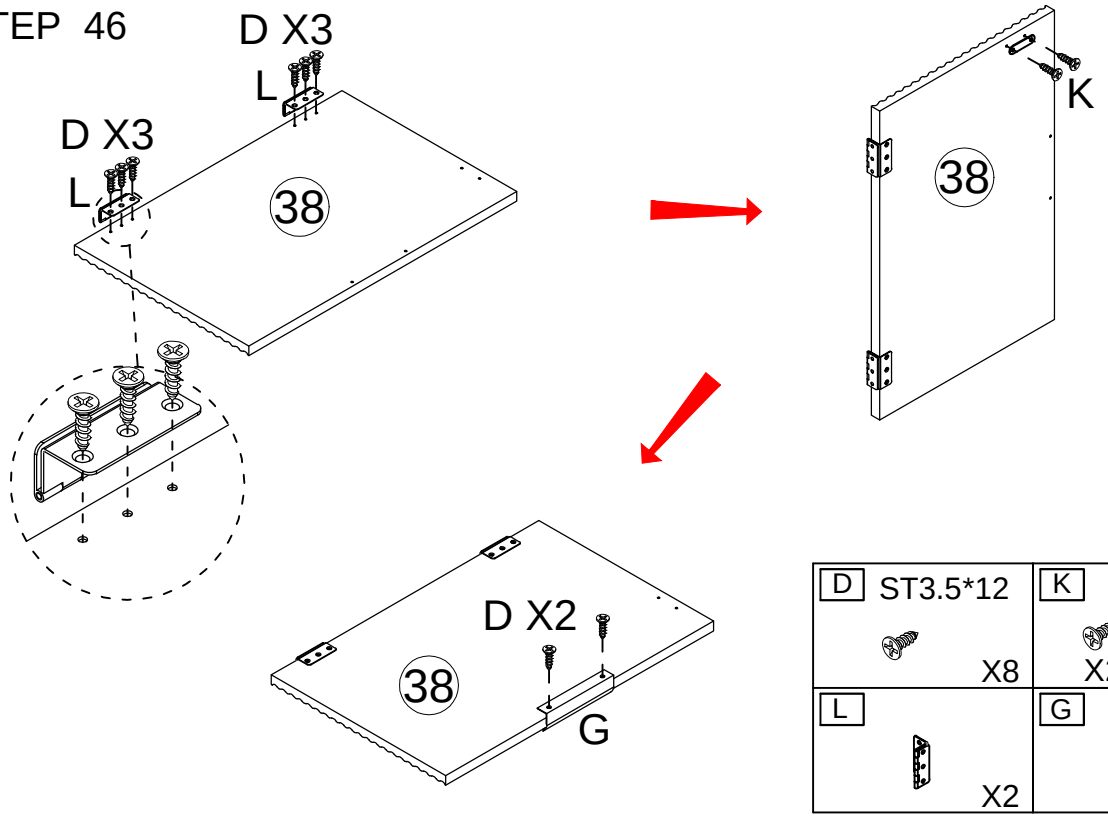

D	ST3.5*12 X8	K	ST3*14 X2 X1
L	X2	G	X1

STEP 47

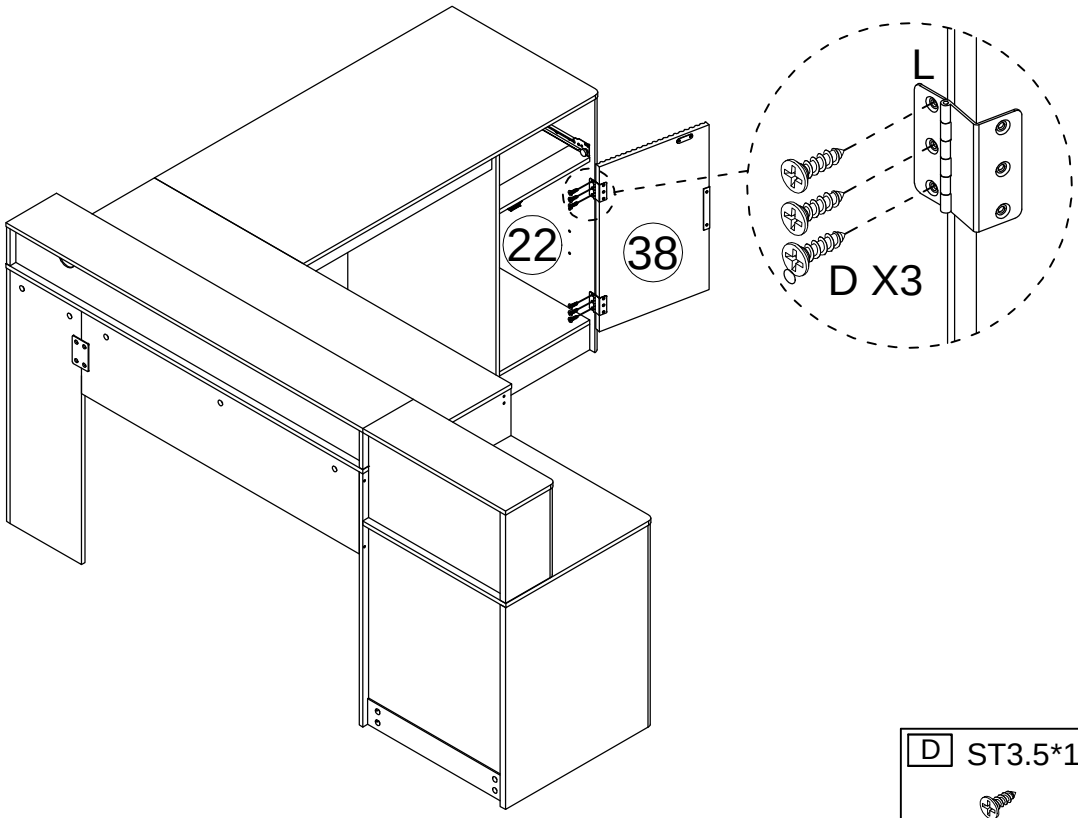

D	ST3.5*12 X6

STEP 48

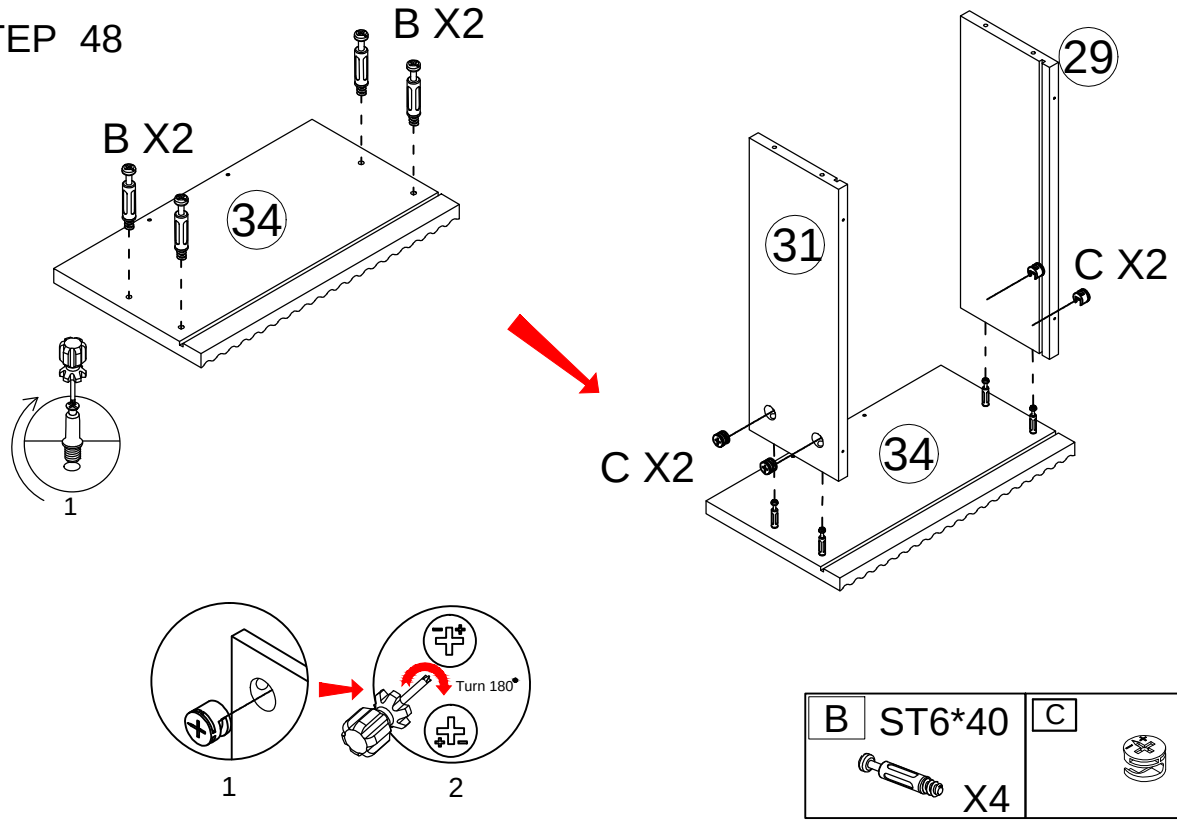

STEP 49

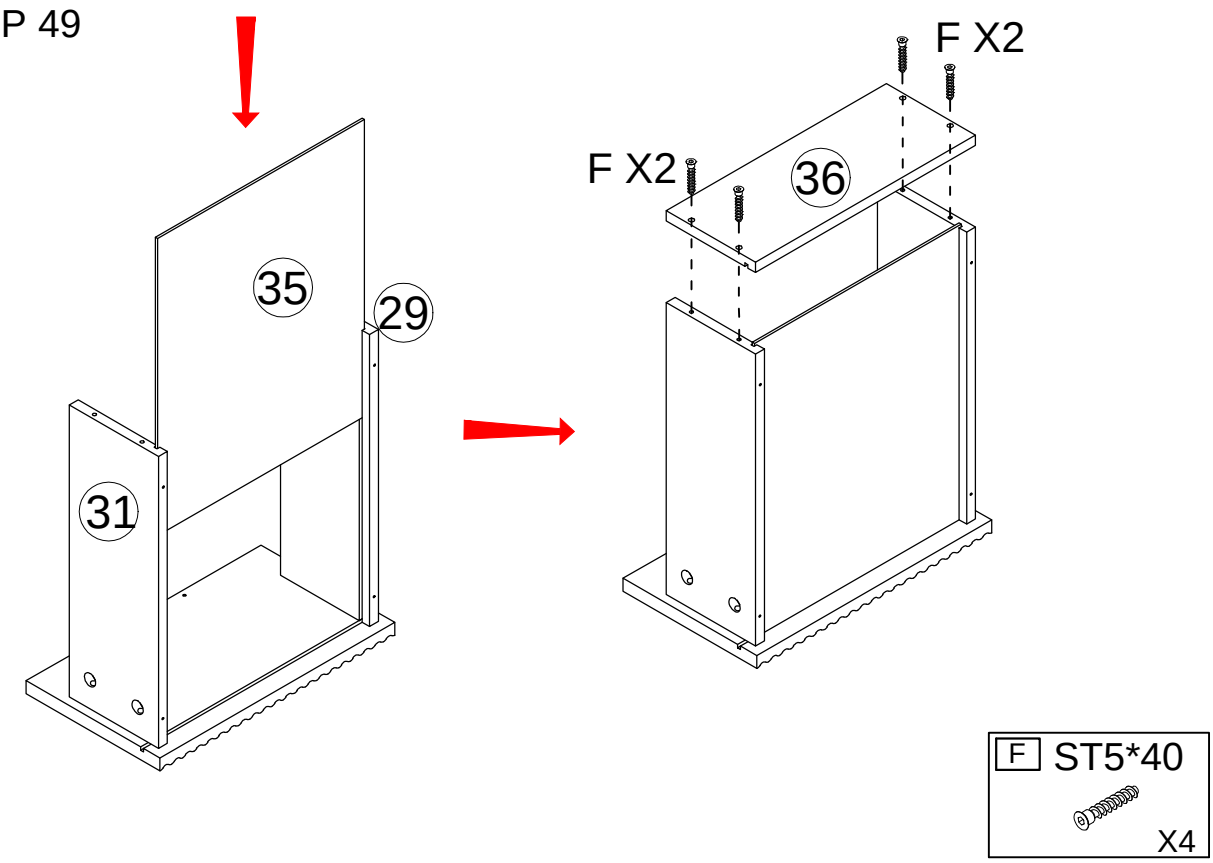

STEP 50

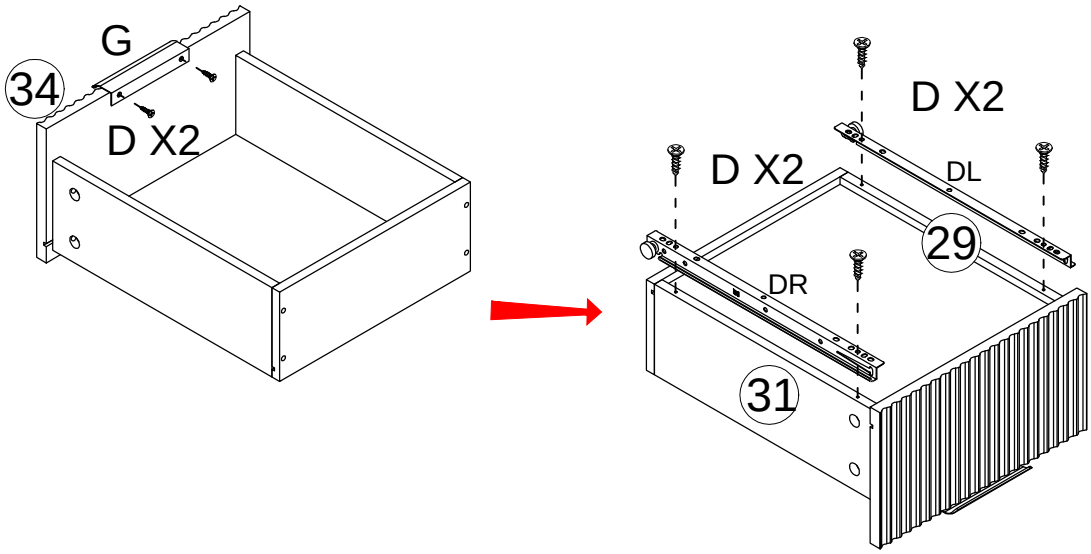

D	G	DR	DL
ST3.5*12 X6	X1	X1	X1

STEP 51

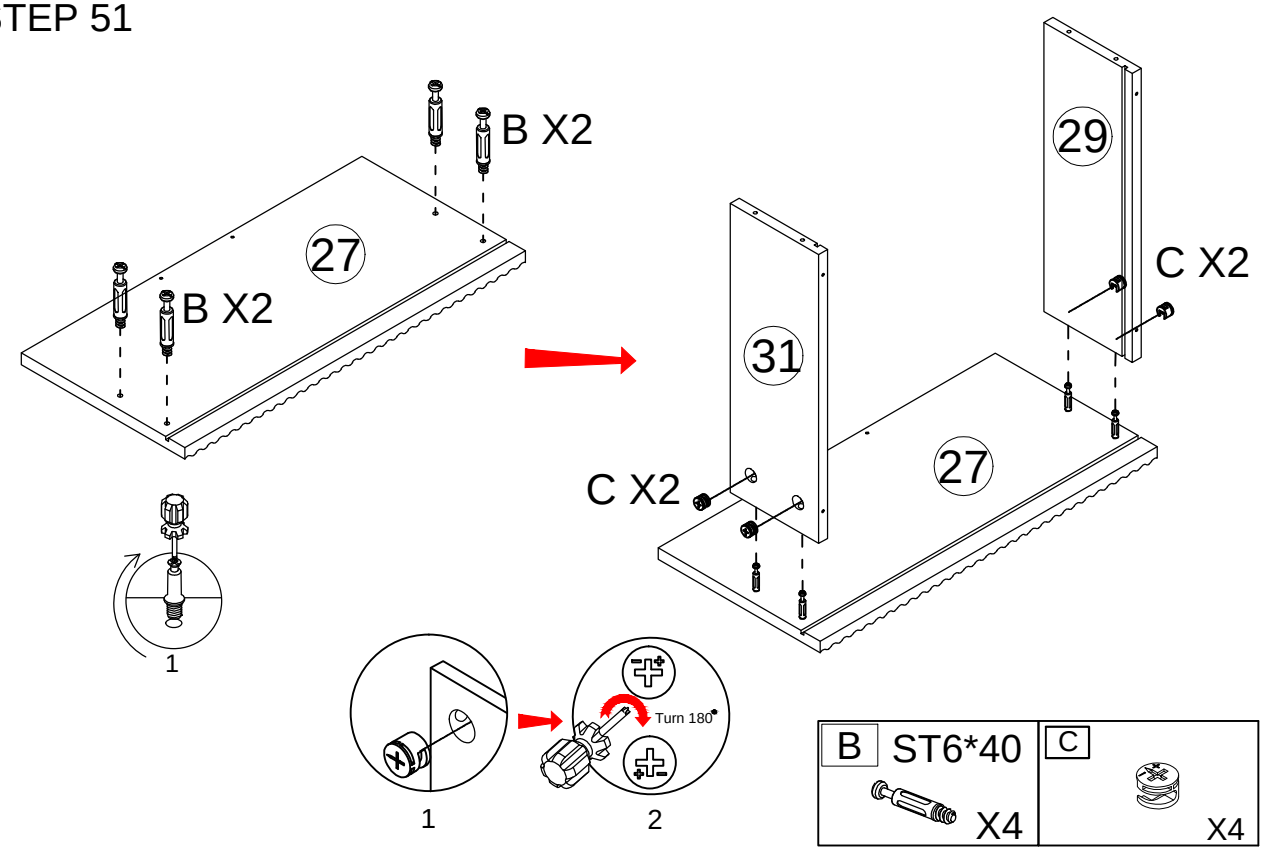

B	C
ST6*40 X4	X4

STEP 52

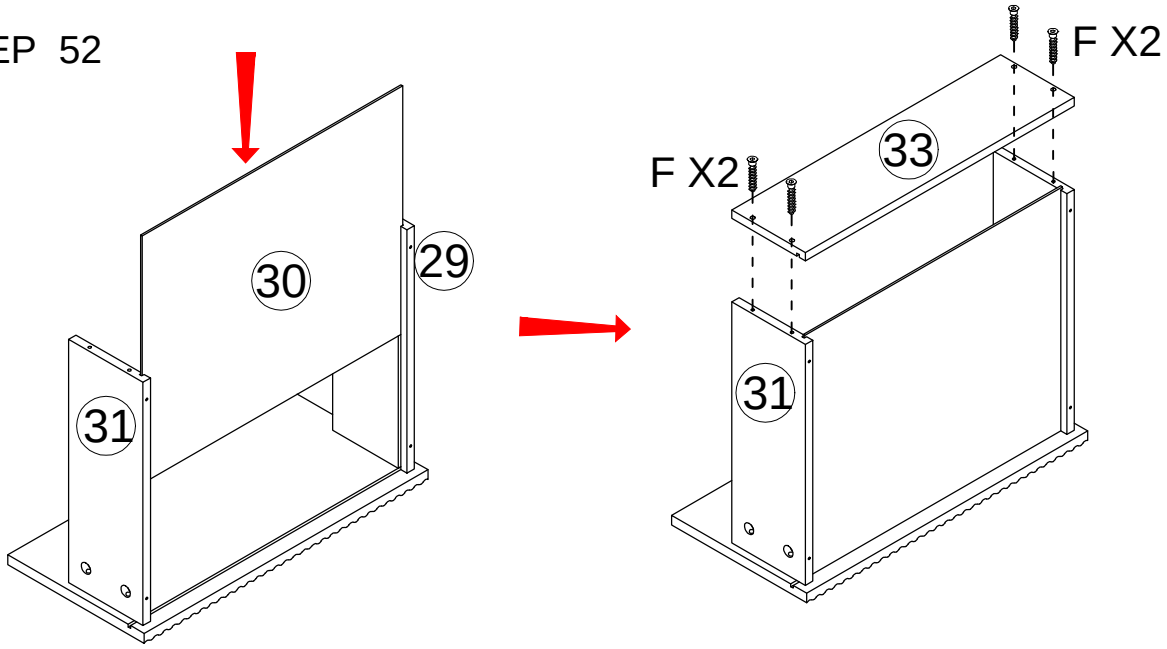

F	ST5*40 X4

STEP 53

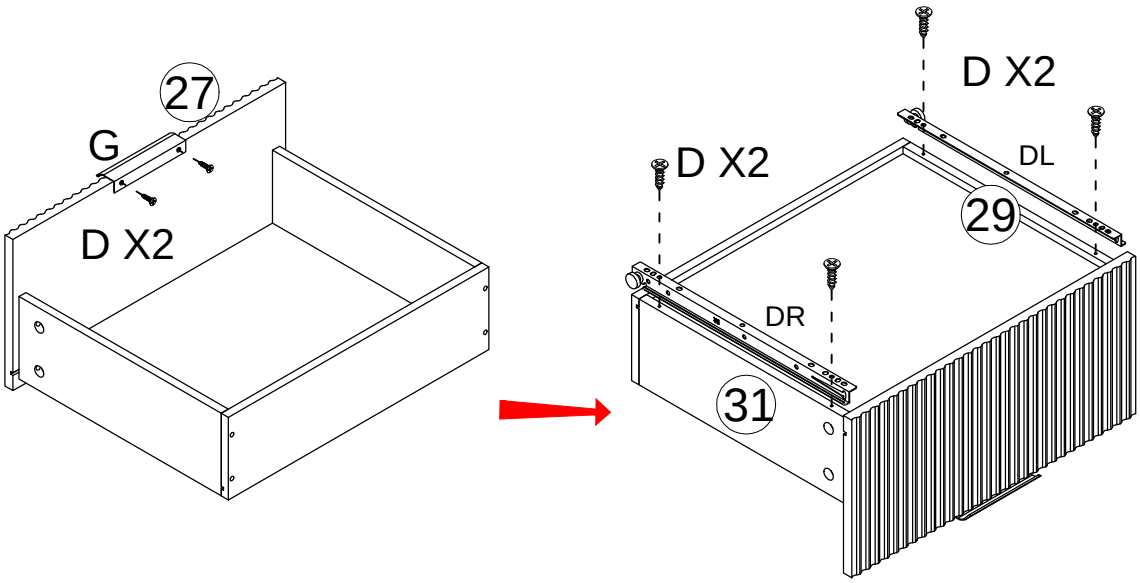

D	ST3.5*12 X6	G	X1	DR	X1	DL	X1

STEP 54

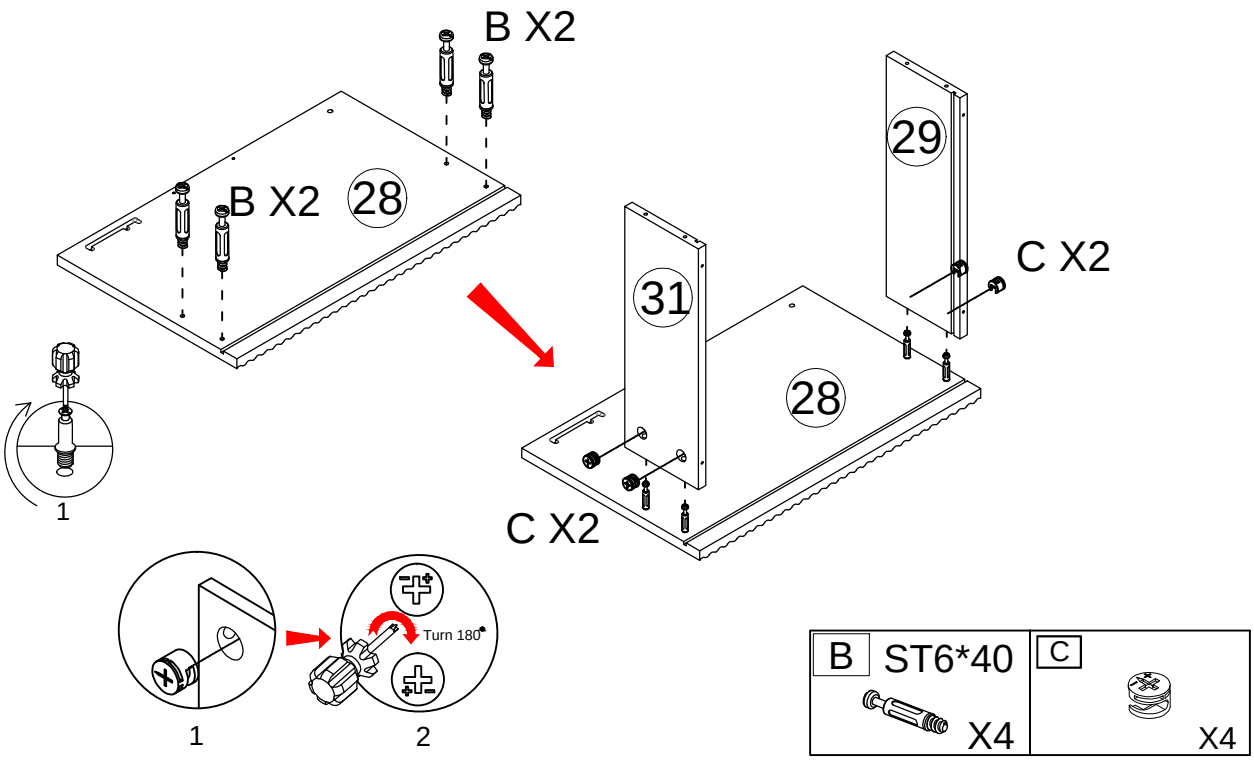

STEP 55

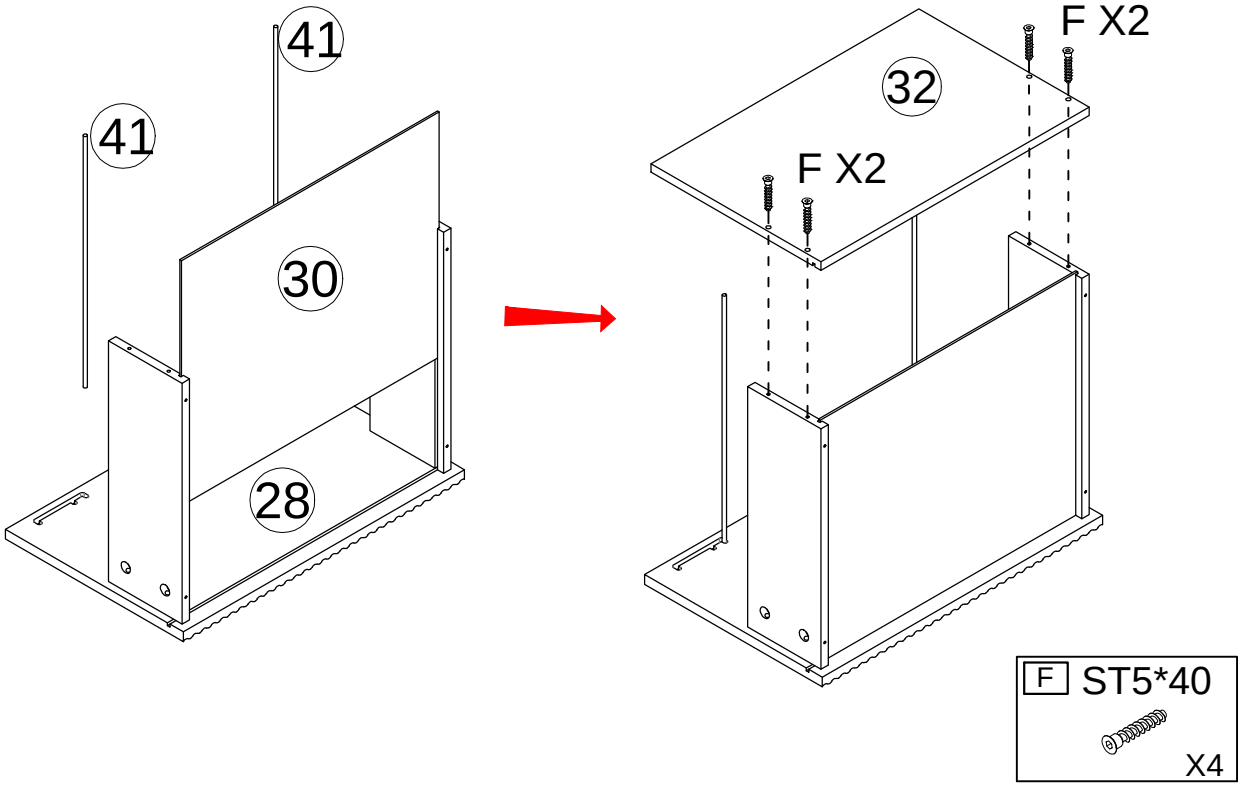

STEP 56

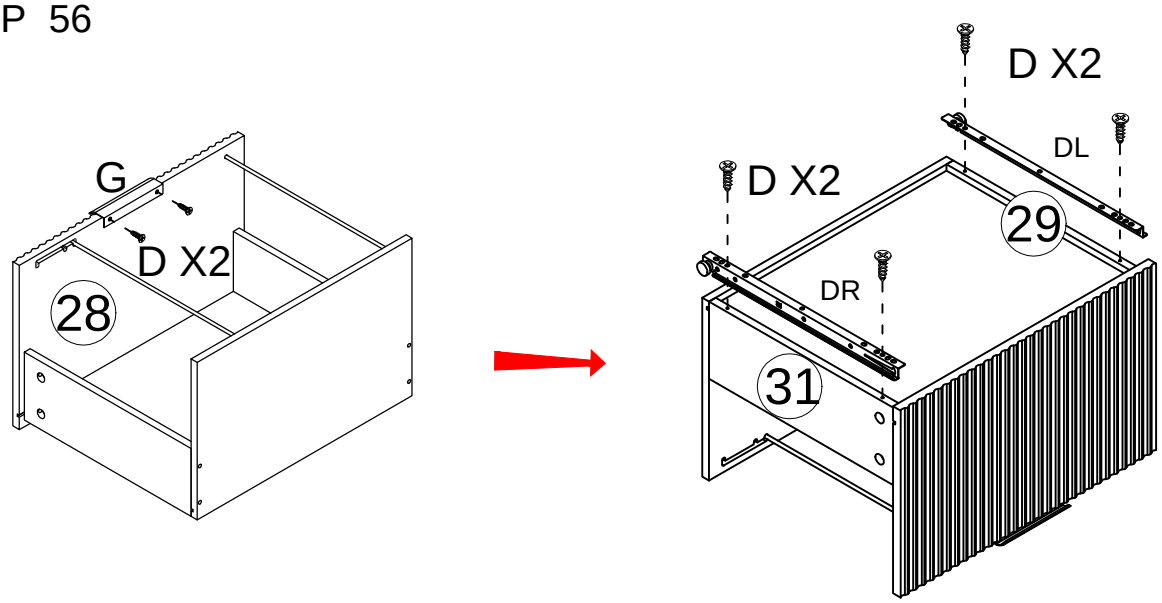

D ST3.5*12	G	DR	DL
X6	X1	X1	X1

STEP 57

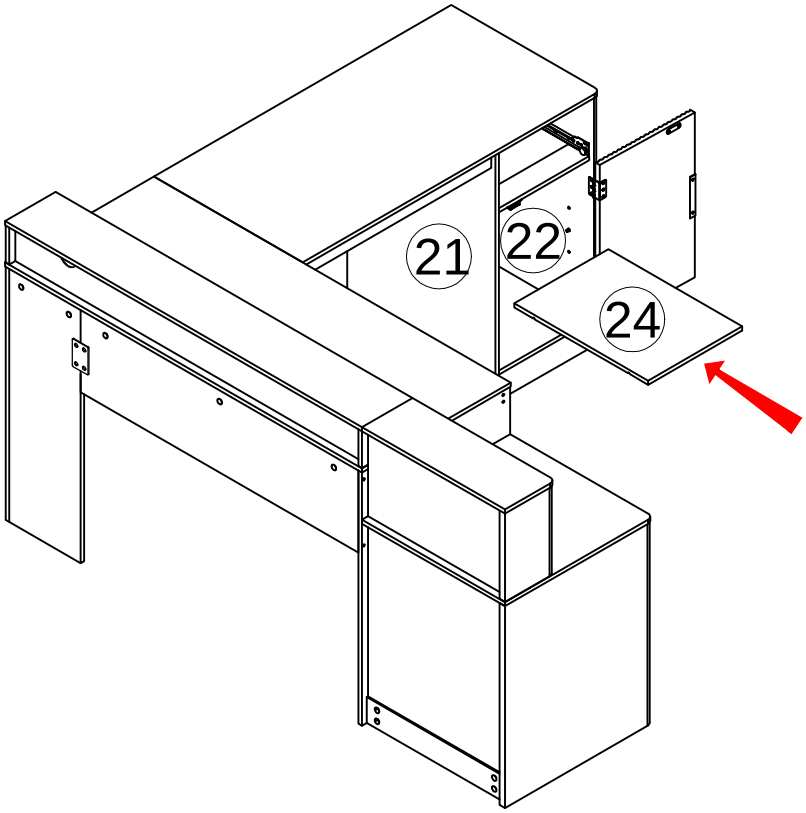

STEP 58

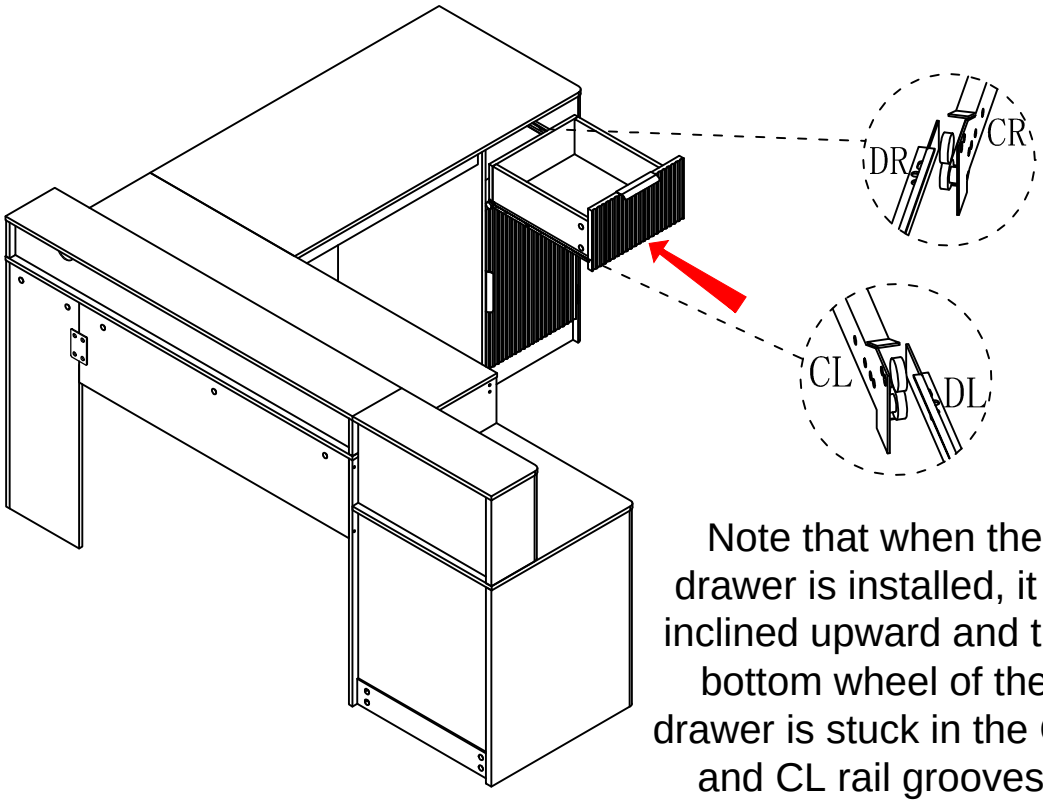

Note that when the drawer is installed, it is inclined upward and the bottom wheel of the drawer is stuck in the CR and CL rail grooves.

STEP 59

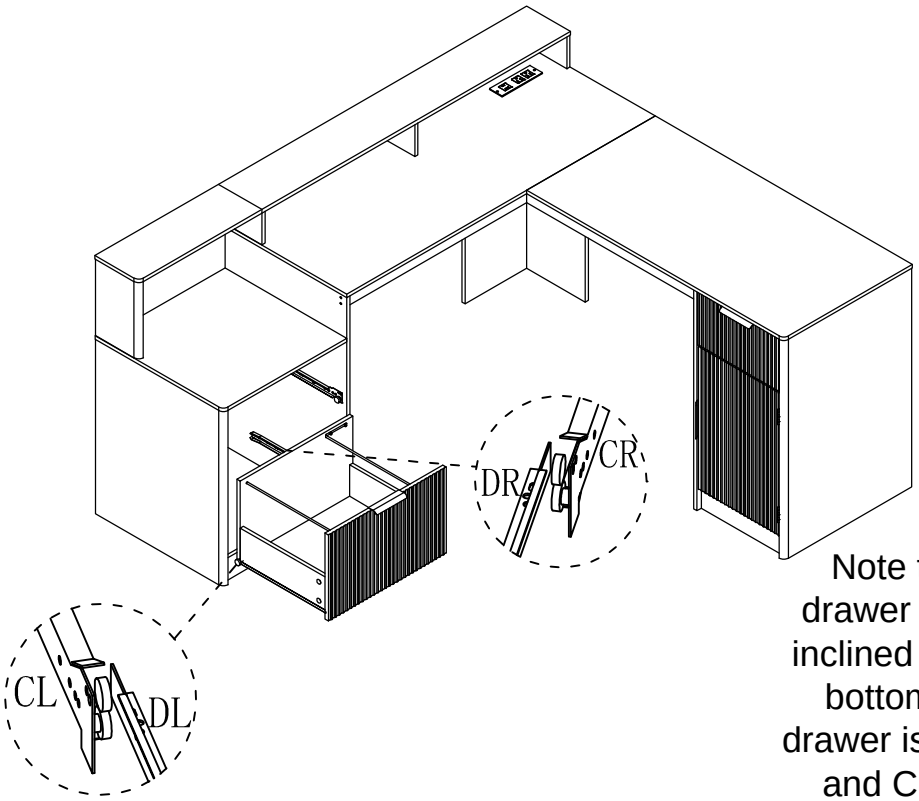

Note that when the drawer is installed, it is inclined upward and the bottom wheel of the drawer is stuck in the CR and CL rail grooves.

STEP 60

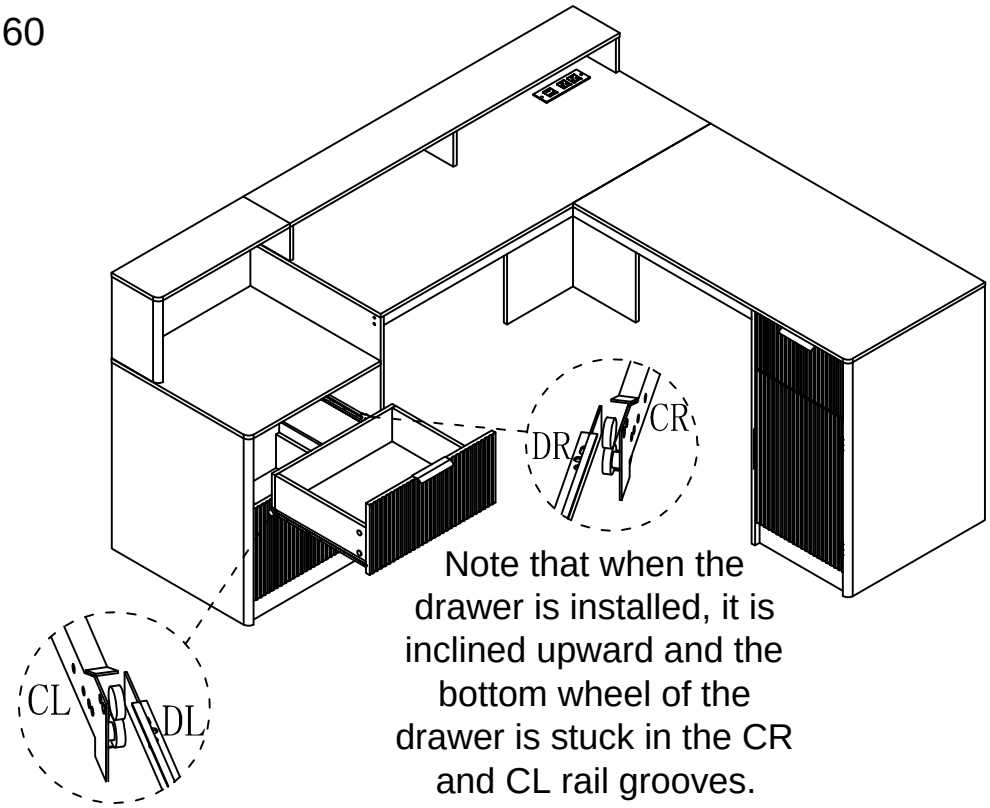

Note that when the drawer is installed, it is inclined upward and the bottom wheel of the drawer is stuck in the CR and CL rail grooves.

STEP 61

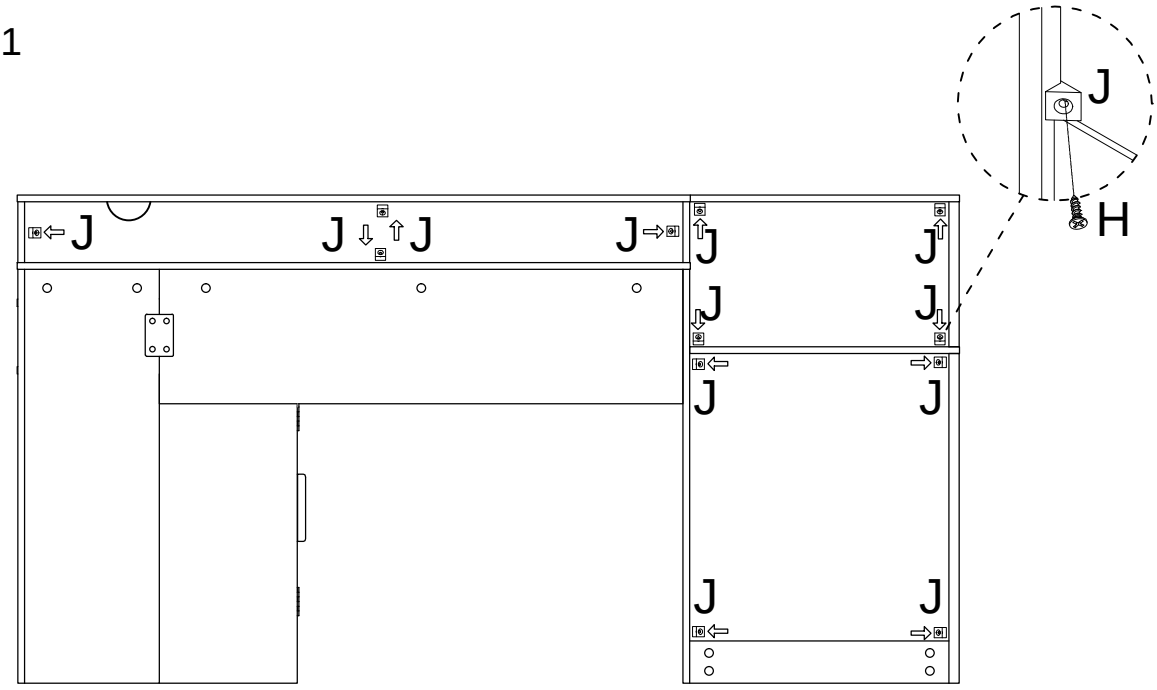

H	J
ST3.5*14 X12	X12

STEP 62

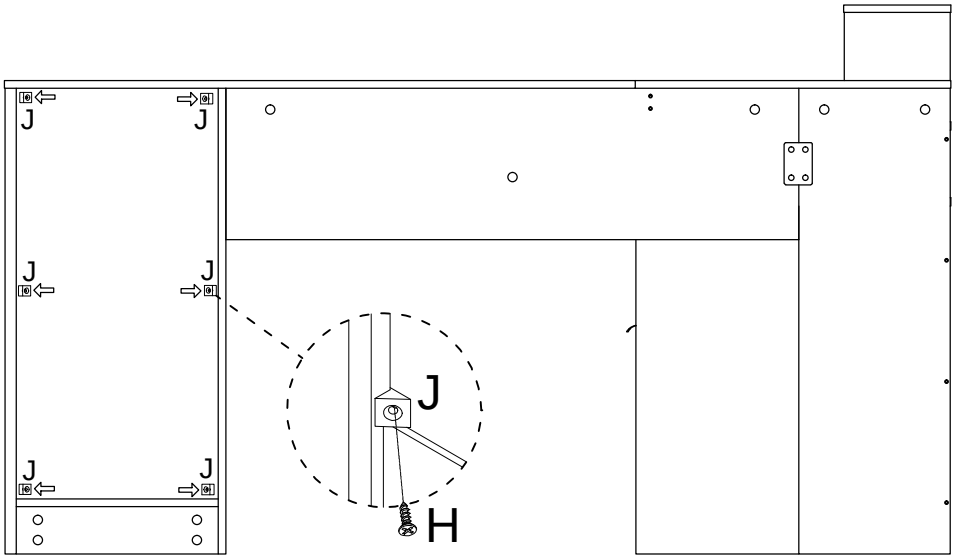

H	ST3.5*14	X6	J		X6

STEP 63

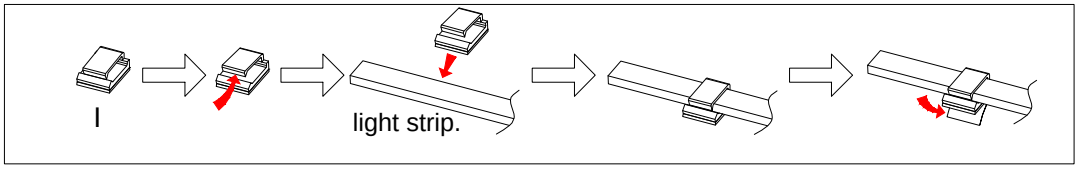

The light strip can be pasted to the desired position according to your own needs.

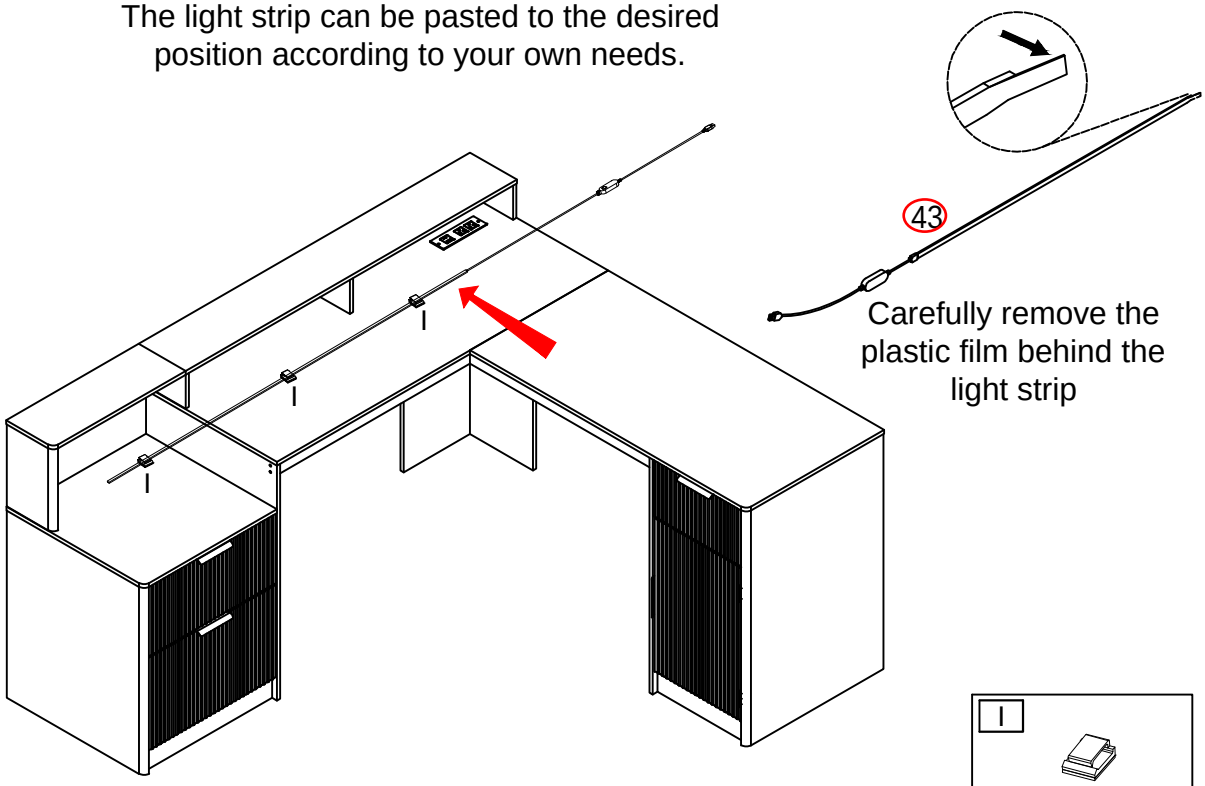

Carefully remove the plastic film behind the light strip

I	X3