tv cabinet

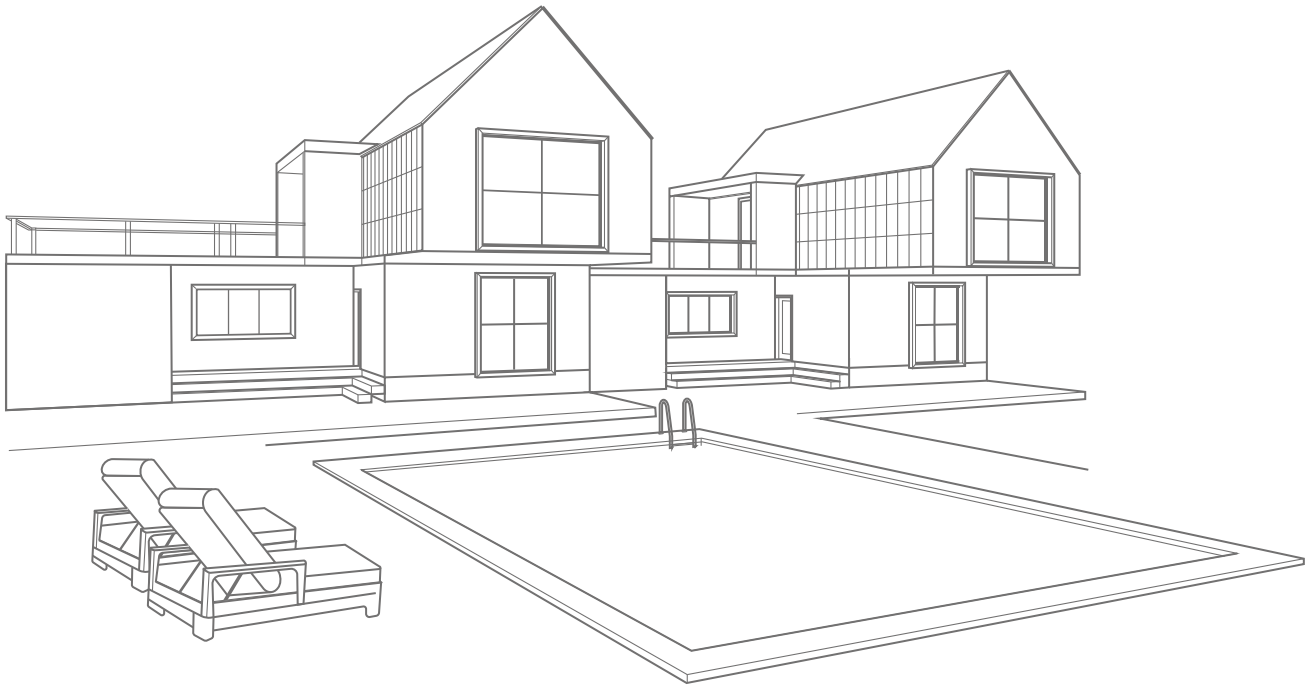

Assembly Instruction

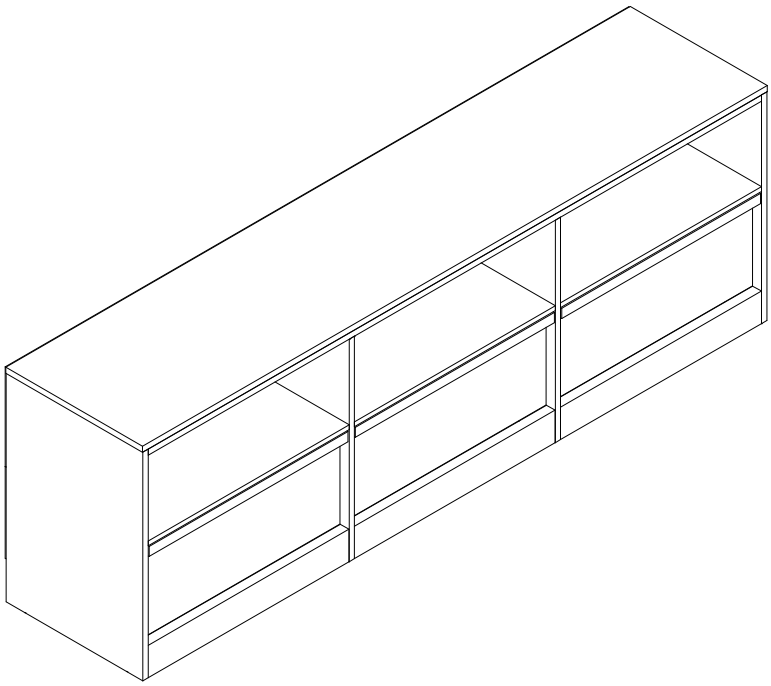

Trouble shooting:

Missing / Wrong / Broken parts and installation issues

↓

Send email with your question pic, order NO. and screenshot of order details

↓

Respond within 24 hours

↓

Issue resolved

Tips!

1.Check all the components & screws are intact before assembling .
2.If you notice any pieces are missing or damaged please do not assemble and contact us immediately .
3.**Please send an email with you order number and issues,we will respond within 24 hours.**

Tools required

A Phillips head screw driver is required for the assembly of this product. (not included)
Electric tool should not be used to assemble this product.

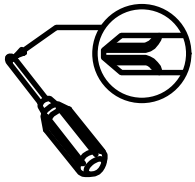

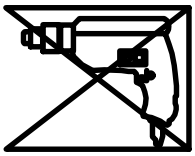

Two people are needed

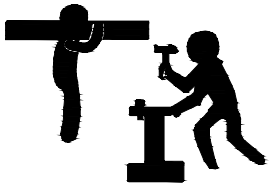

IMPORTANT SAFETY INFORMATION

- Please carefully read the following instructions and caution warnings before assembling the product.
- Following this guide will ensure that you install, use and maintain the product properly.
- Please keep this installation and user manual/instructions for future reference in case you need to disassemble the product.
- Never allow children to climb onto the product. Ensure that you have special safety measures when children are around on their own.
- Be sure to check that all parts of the product are intact after you open the package.
- Do not assemble if you notice serious damage such as cracks or bends.
- During installation, please use work gloves for hand safety.
- Please assemble the unit on carpeted floor or the flat cardboard box to avoid scratching the surface or your floor while assembling on the floor.
- To assemble, please use the complimentary installation tools (Phillips screwdriver). Pay more attention to the direction of components at each steps.
- It is recommended that two people work together to assemble the product.

RETURN POLICY

- Please contact us directly within 30 days after receiving.
- Ensure the product is in a good condition with the original box and all original certificates of purchase, manuals, and accessories attached.

COMPONENTS ID Nr.

Part Nr.	Qty	Part Nr.	Qty	Part Nr.	Qty
①	1pcs	⑧	1pcs	⑮	3pcs
②	1pcs	⑨	1pcs	⑯	3pcs
③	1pcs	⑩	2pcs	⑰	3pcs
④	1pcs	⑪	1pcs	⑱	3pcs
⑤	1pcs	⑫	2pcs	⑲	3pcs
⑥	2pcs	⑬	1pcs	⑳	3pcs
⑦	1pcs	⑭	1pcs		

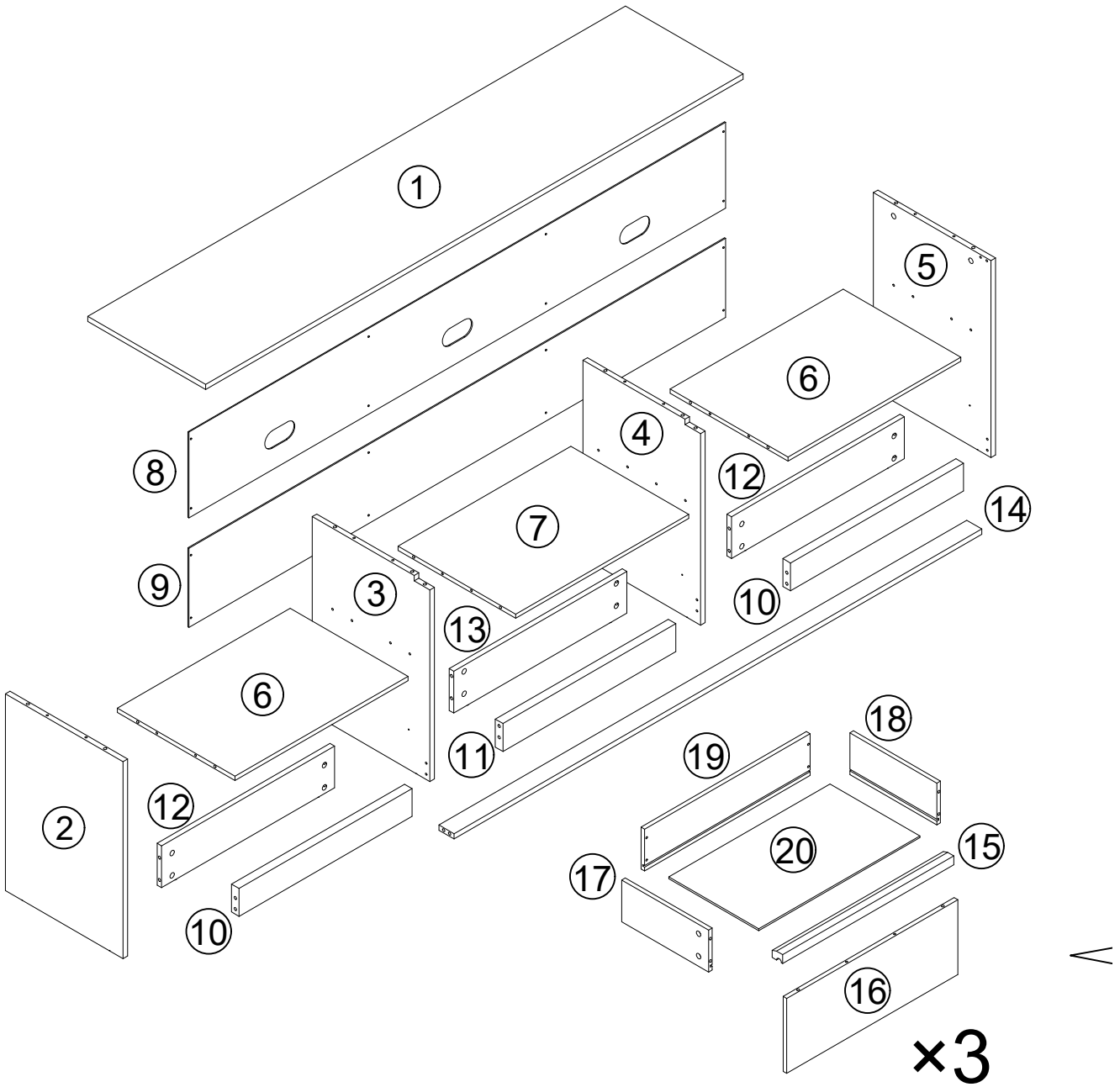

HARDWARE LIST

A x 12 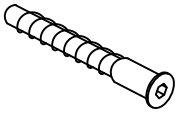 M5x40mm	B x 40  M3.5x12mm	C x 66 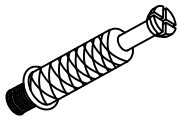 K M6x40mm	D x 66 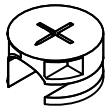 M15x9mm
E x 28 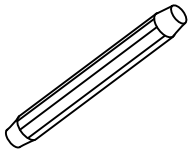 Ø6*50	F x 3 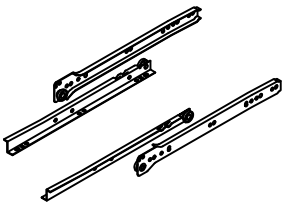 L300	G x 1 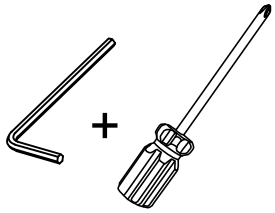 M4	

PRODUCT ASSEMBLY

1

Ø3.5x12mm



B x 2

L300

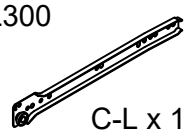

C-L x 1

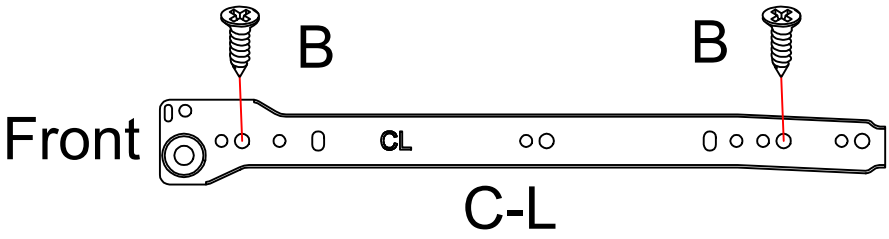

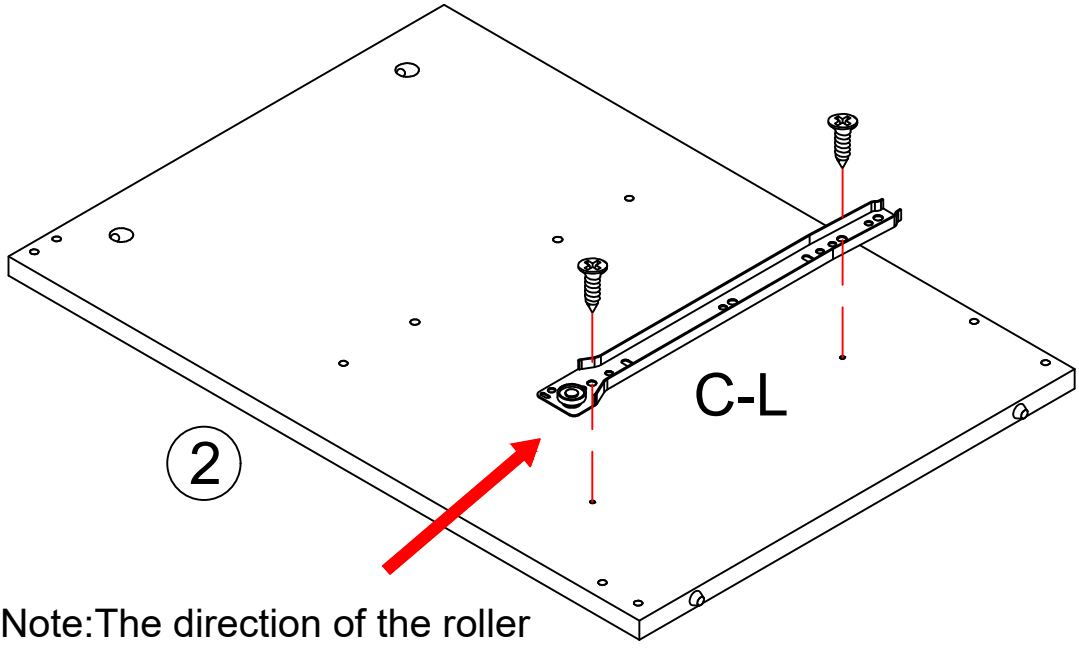

Note:The direction of the roller

Affter assembly

Noted the distance
ofglide to edge is 38mm

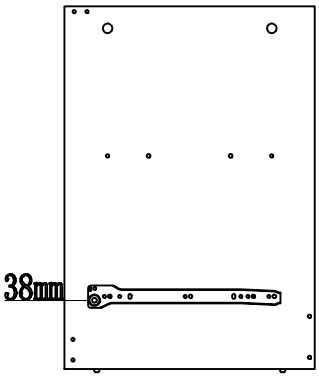

PRODUCT ASSEMBLY

2

K M6x40mm



C x 8

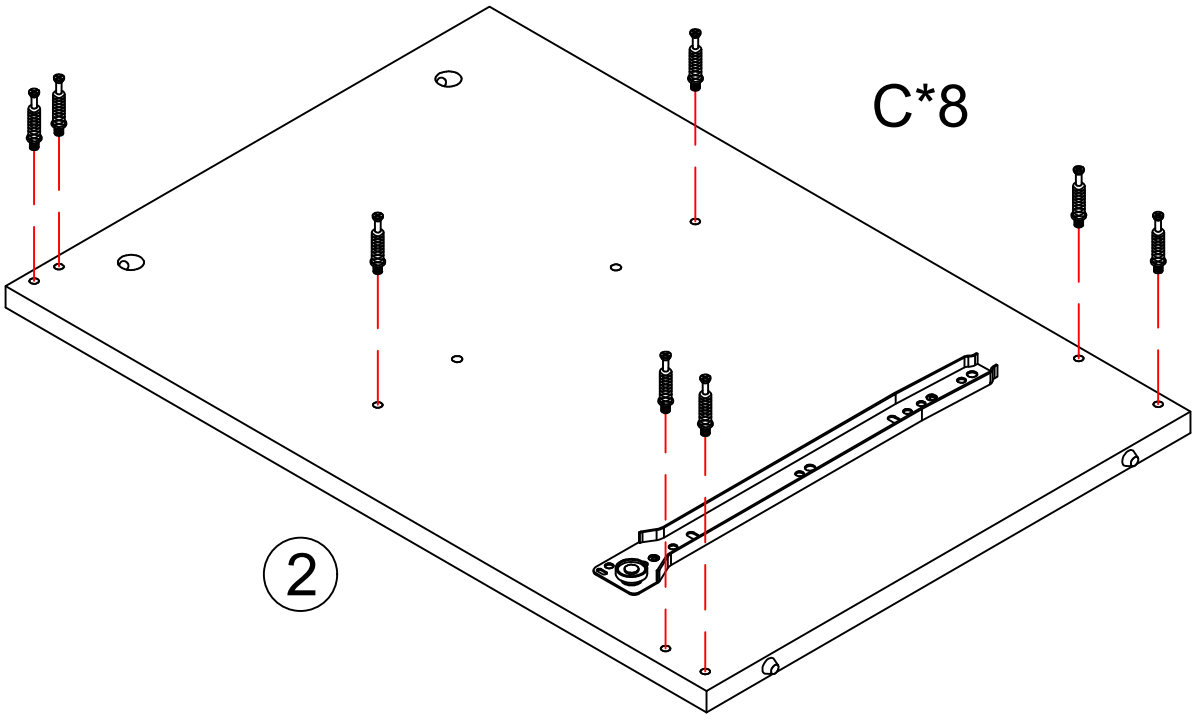

PRODUCT ASSEMBLY

3

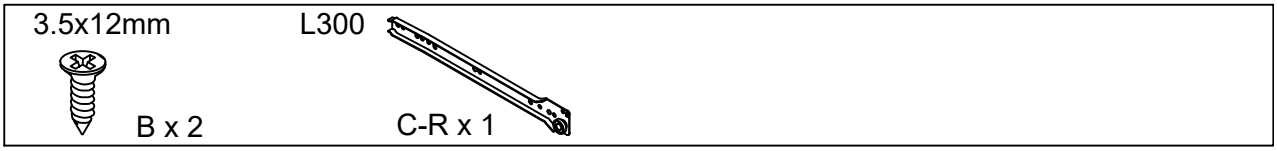

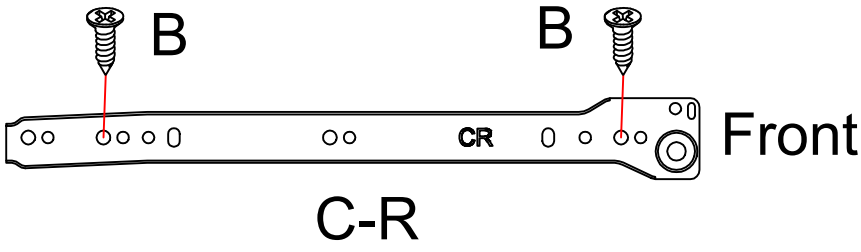

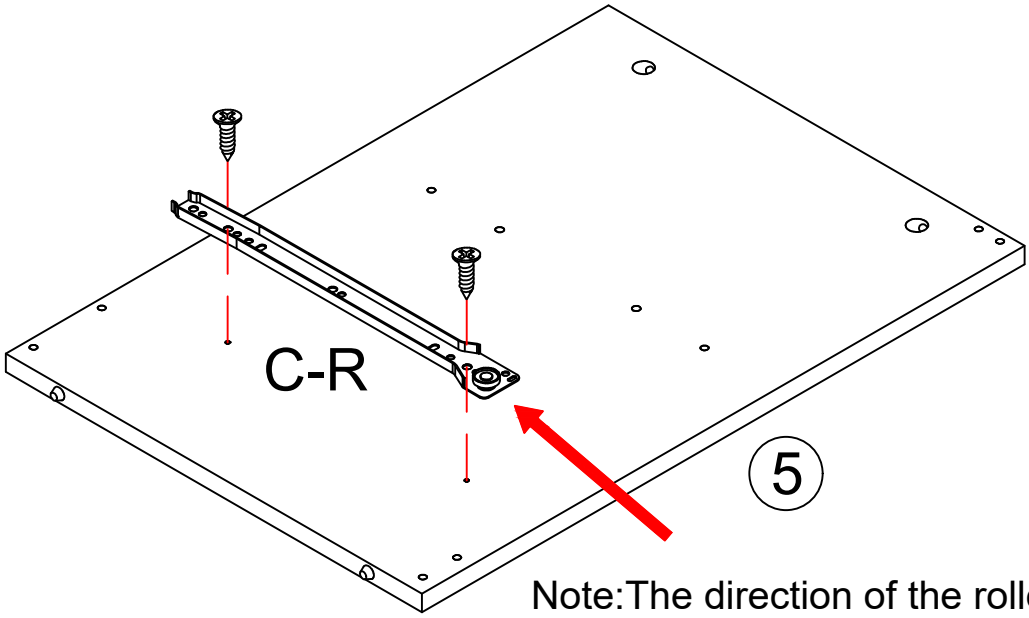

Note:The direction of the roller

Affter assembly

Noted the distance
ofglide to edge is 38mm

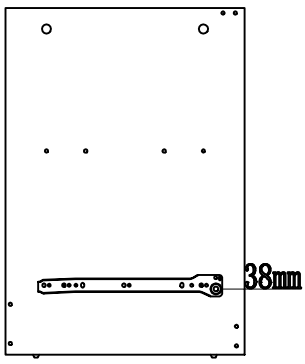

4

K M6x40mm



C x 8

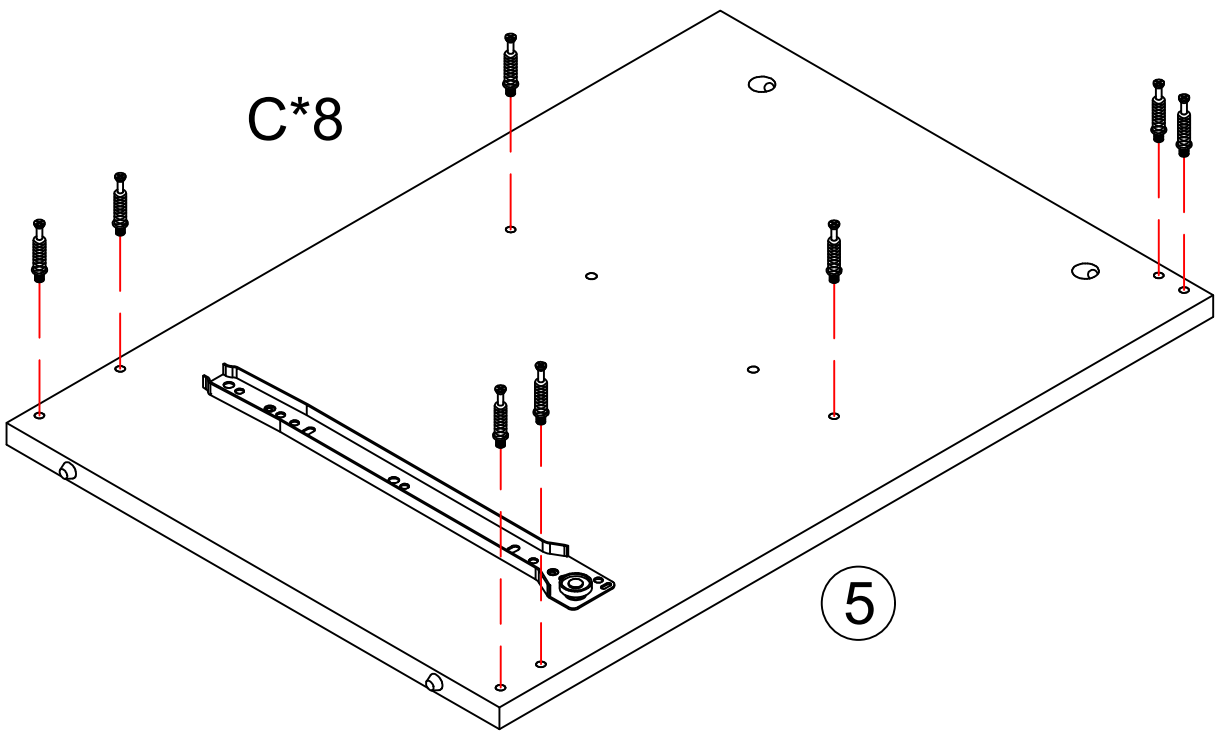

5

Ø3.5x12mm



B x 4

L300

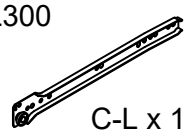

C-L x 1

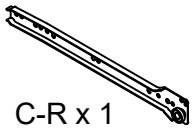

C-R x 1

Please noted the screw assembly holesis different between the C-L and C-R

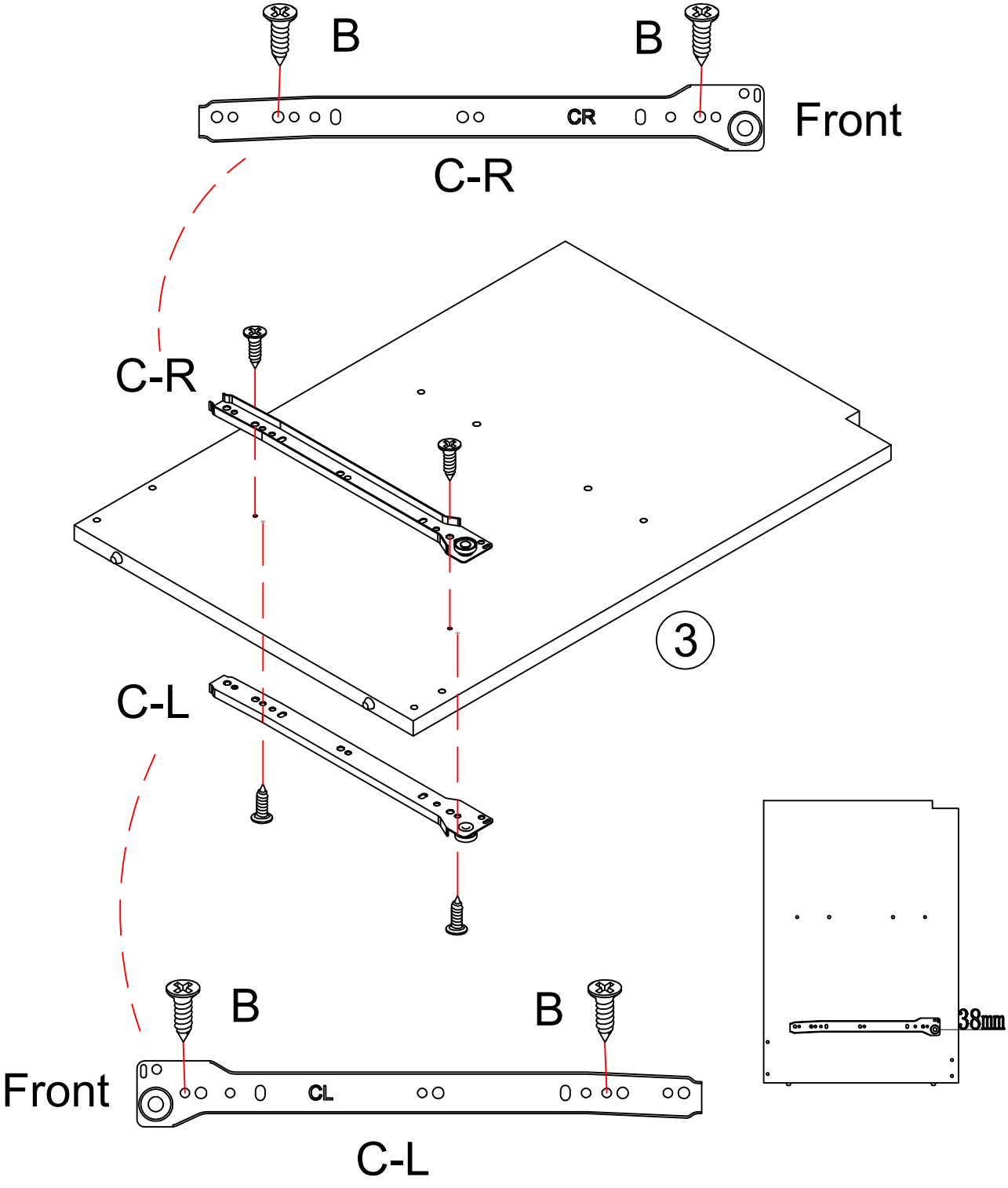

6

K M6x40mm



C x 16

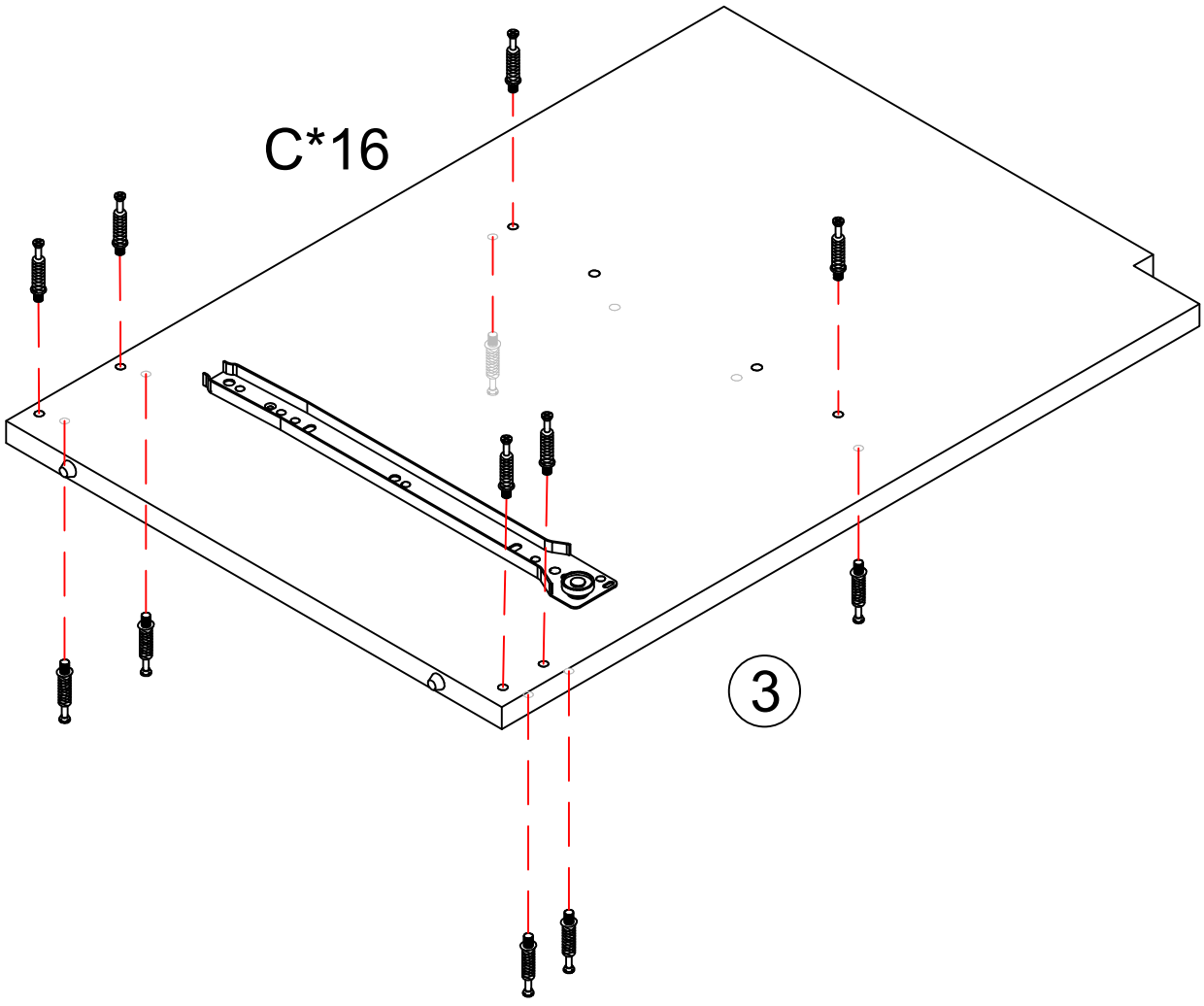

7

Ø3.5x12mm B x 4

L300 C-L x 1 C-R x 1

Please noted the screw assembly holesis different between the C-L and C-R

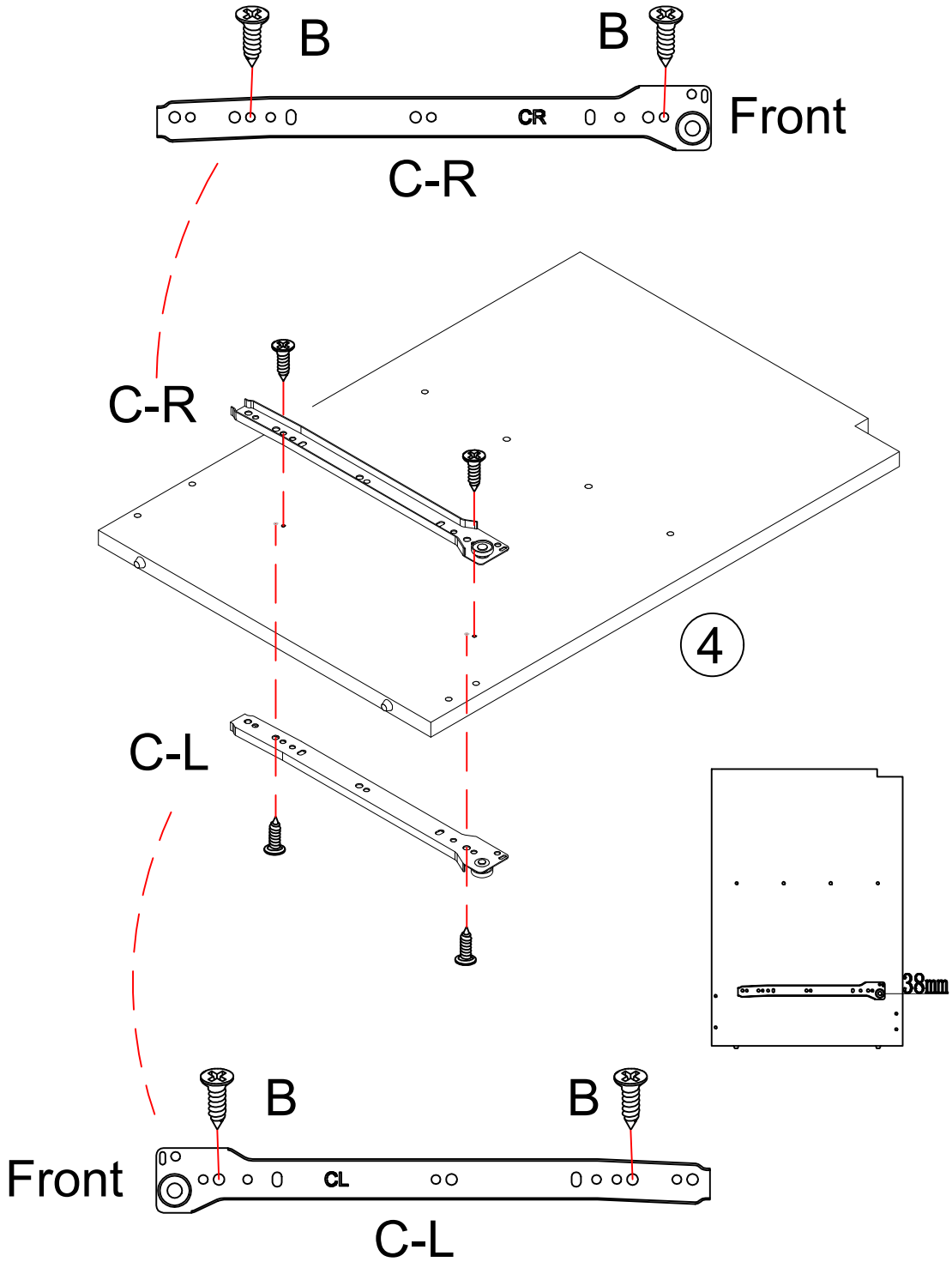

8

K M6x40mm



C x 16

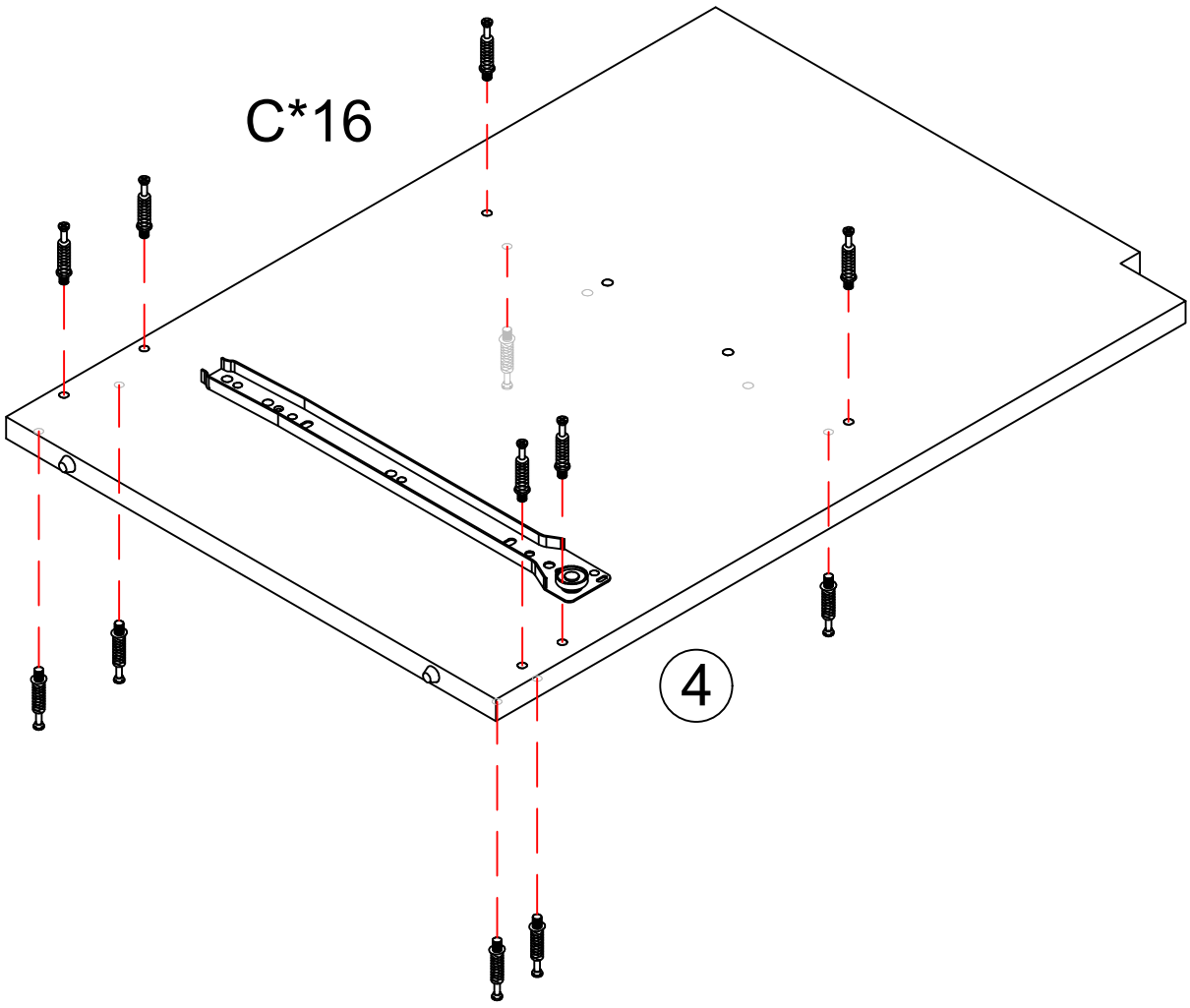

9

M15x9mm D x 2

Ø6x50mm E x 2

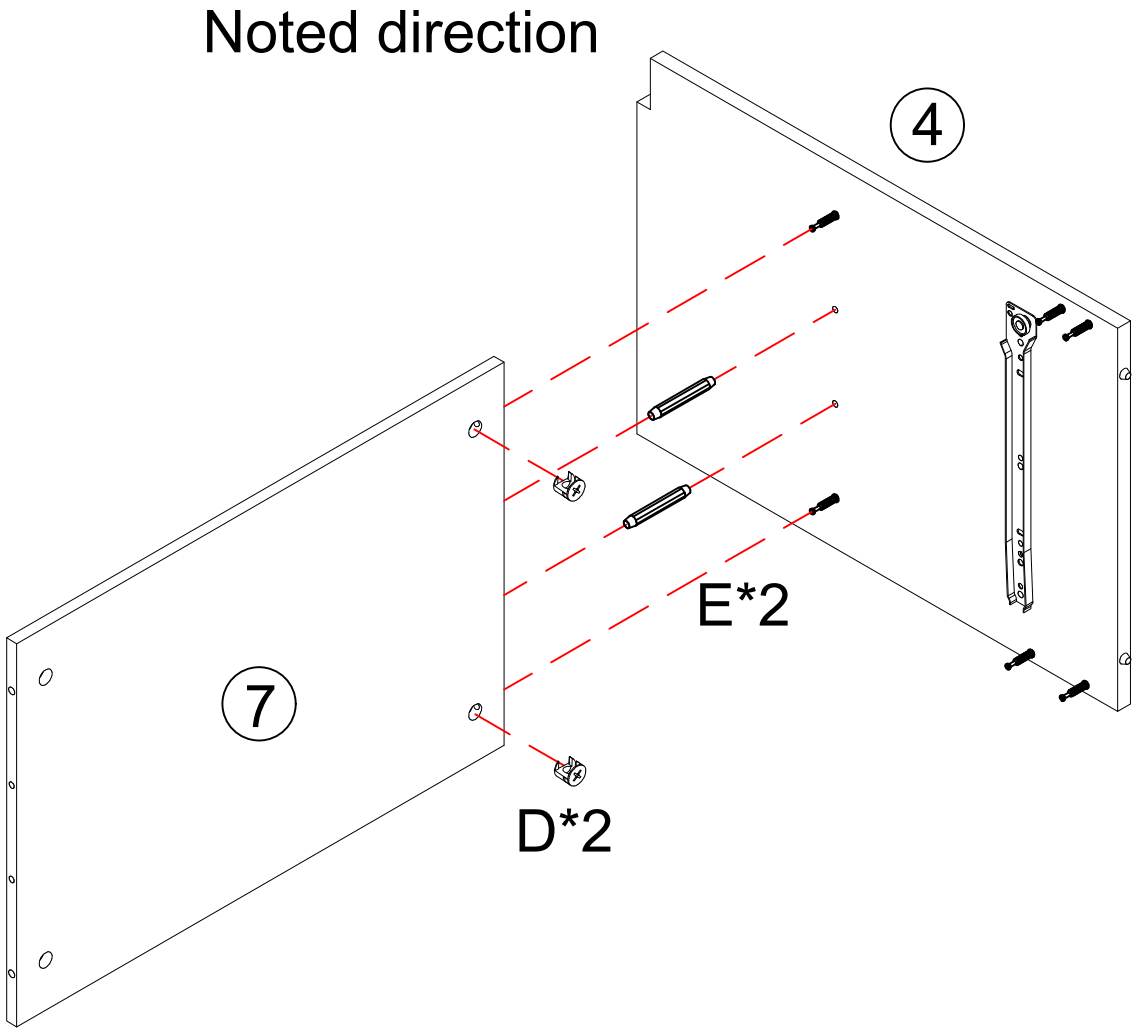

10

M15x9mm



D x 4

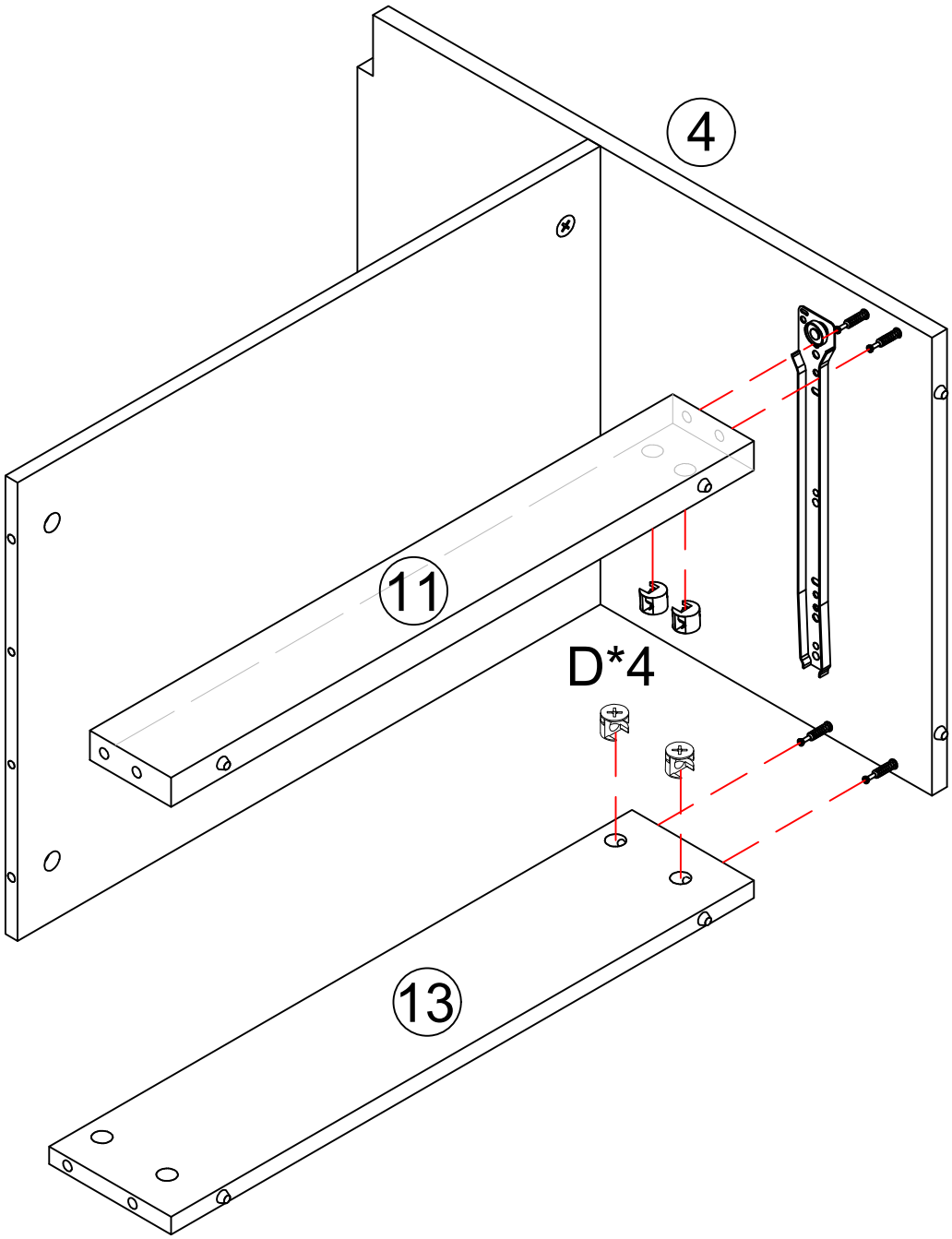

11

M15x9mm



D x 6

Ø6x50mm



E x 2

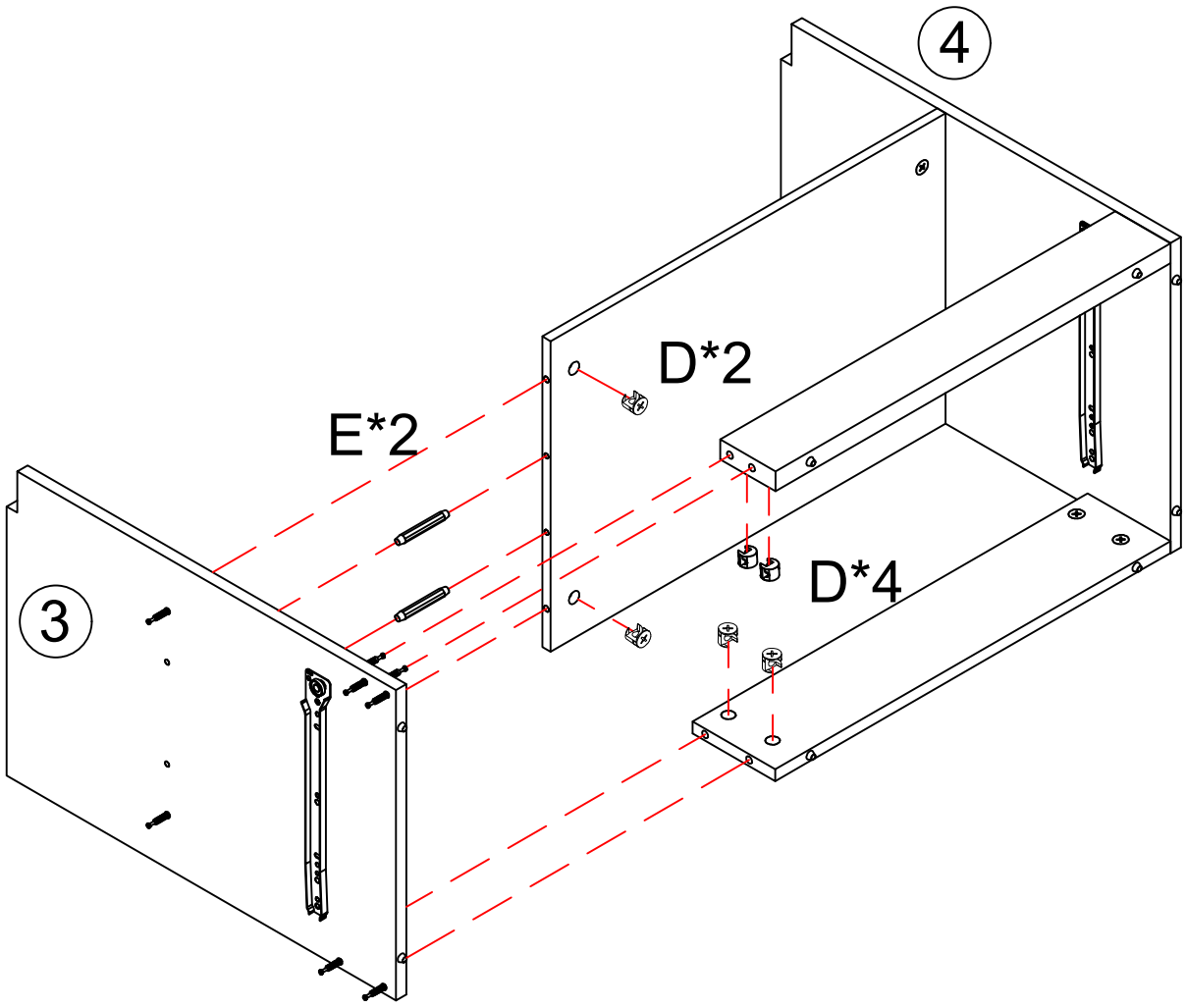

Noted direction

12

M15x9mm D x 2



Ø6x50mm E x 2



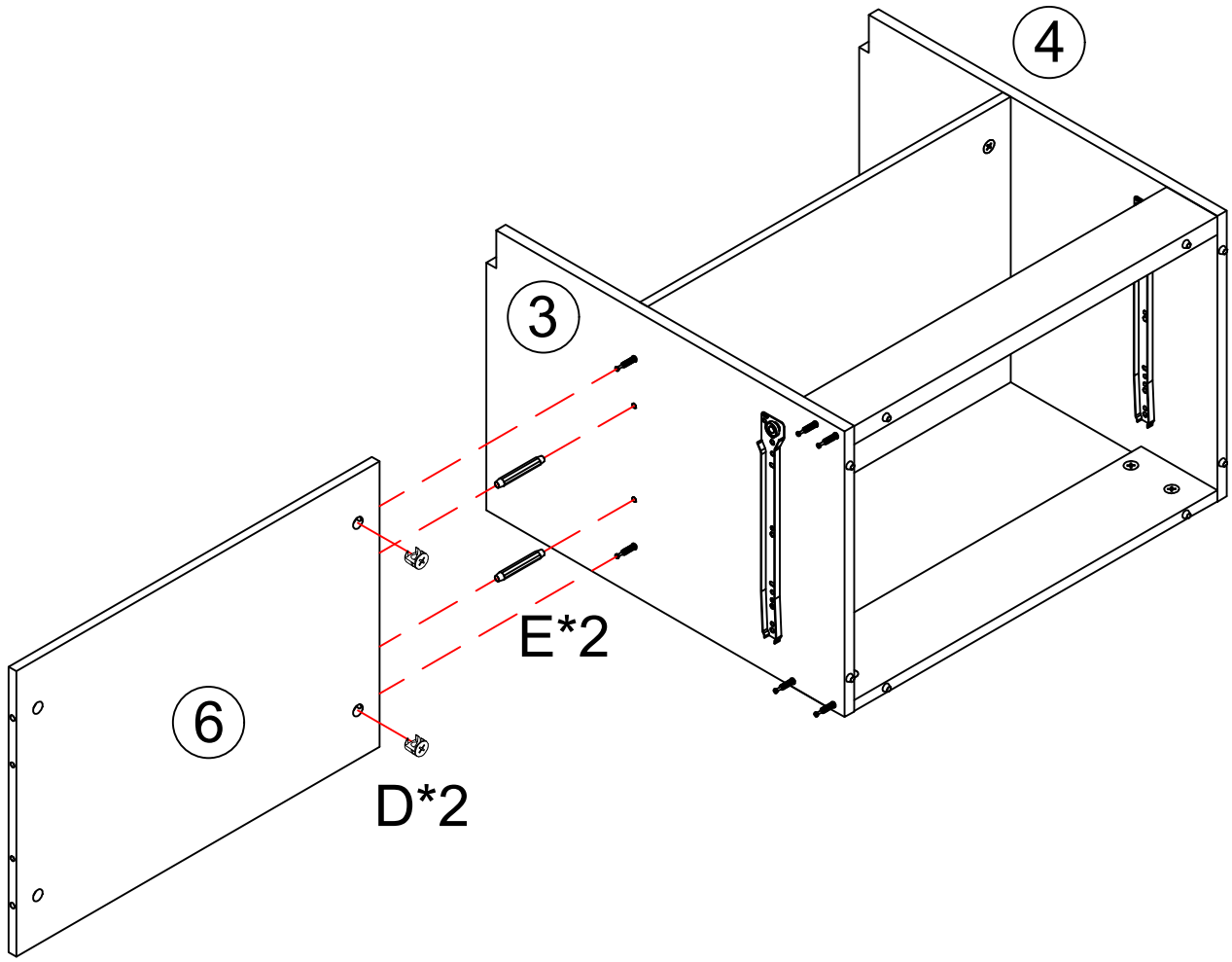

13

M15x9mm



D x 4

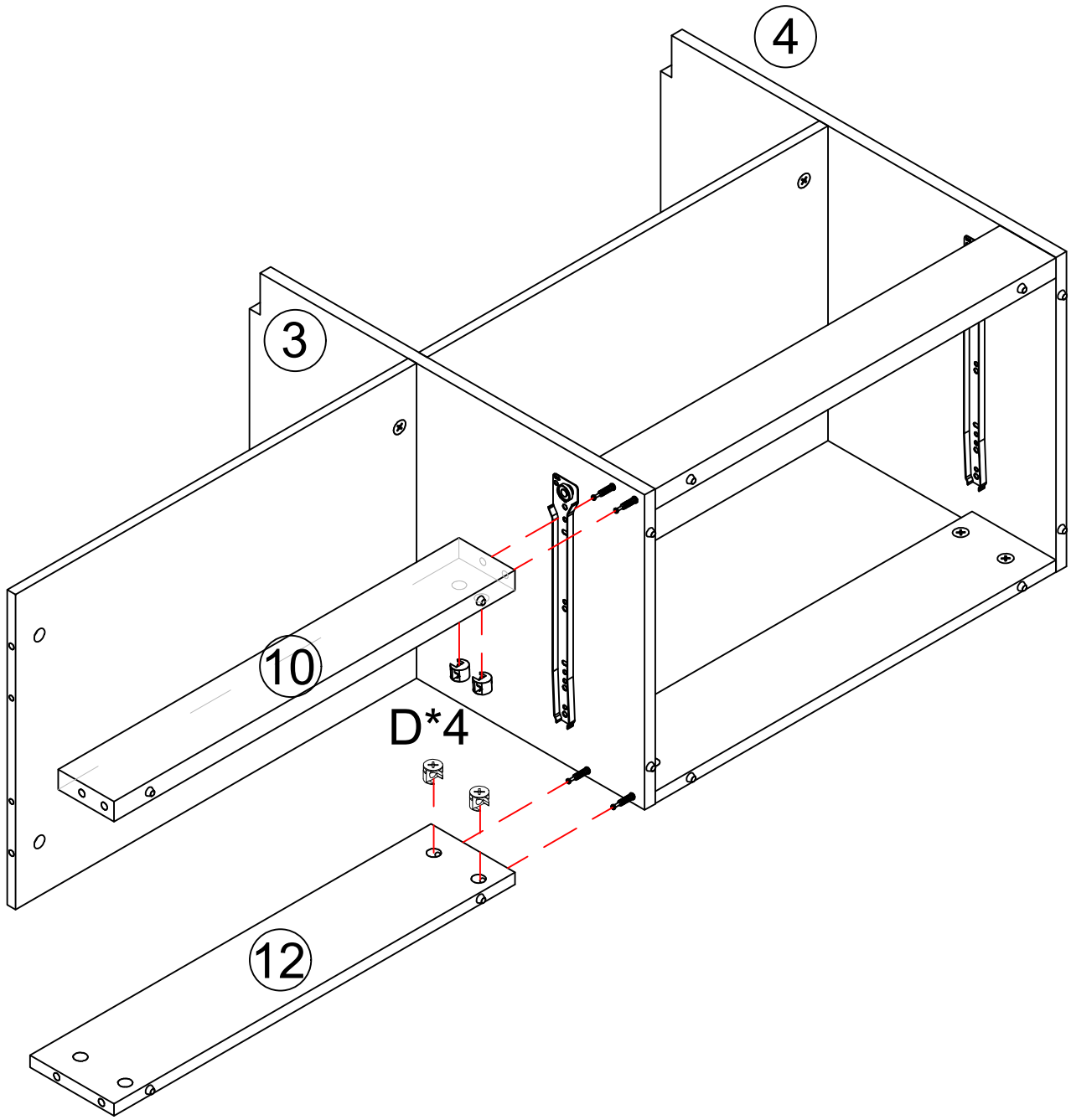

14

Ø6x50mm



E x 2

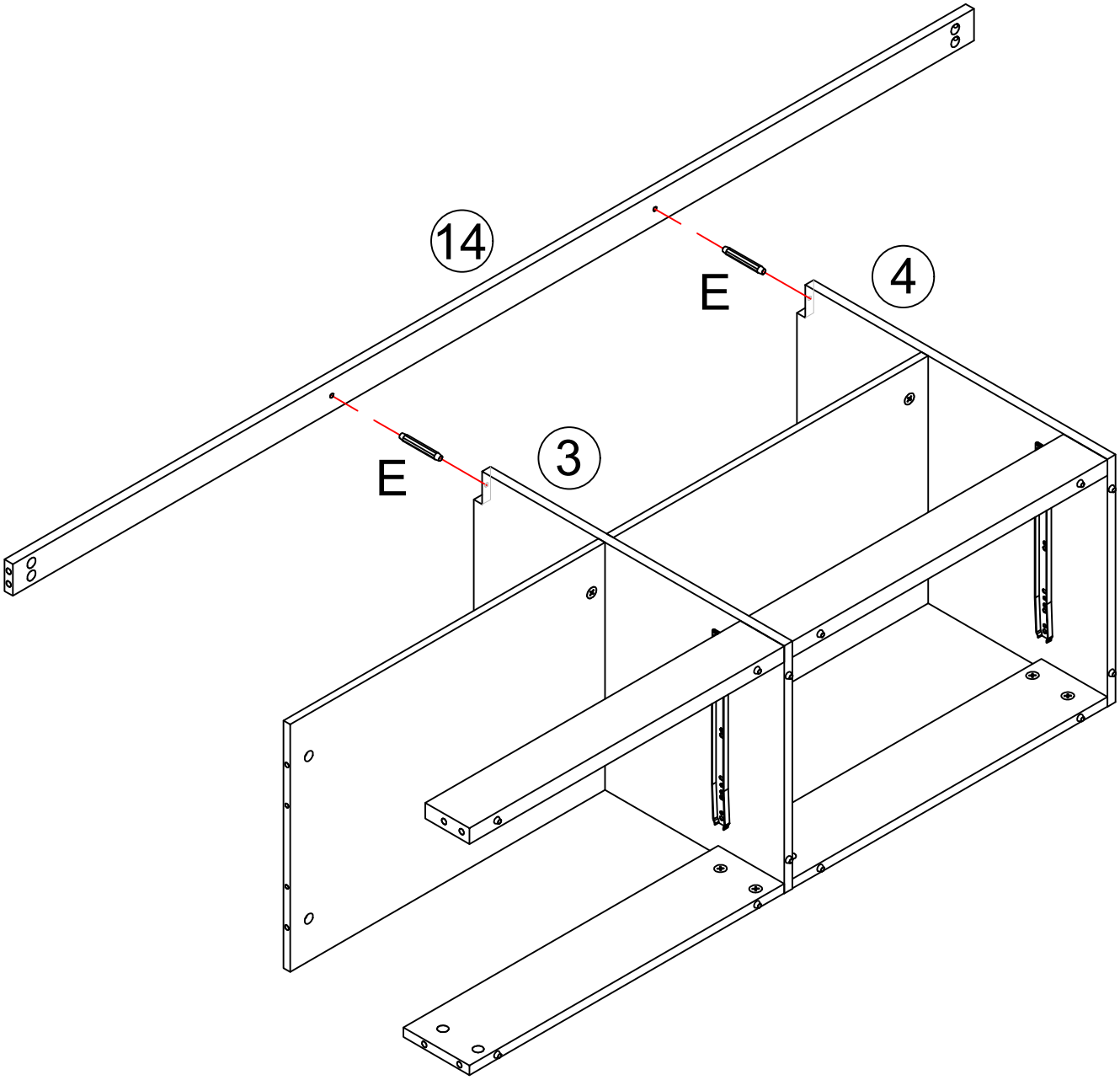

15

M15x9mm



D x 8

Ø6x50mm



E x 2

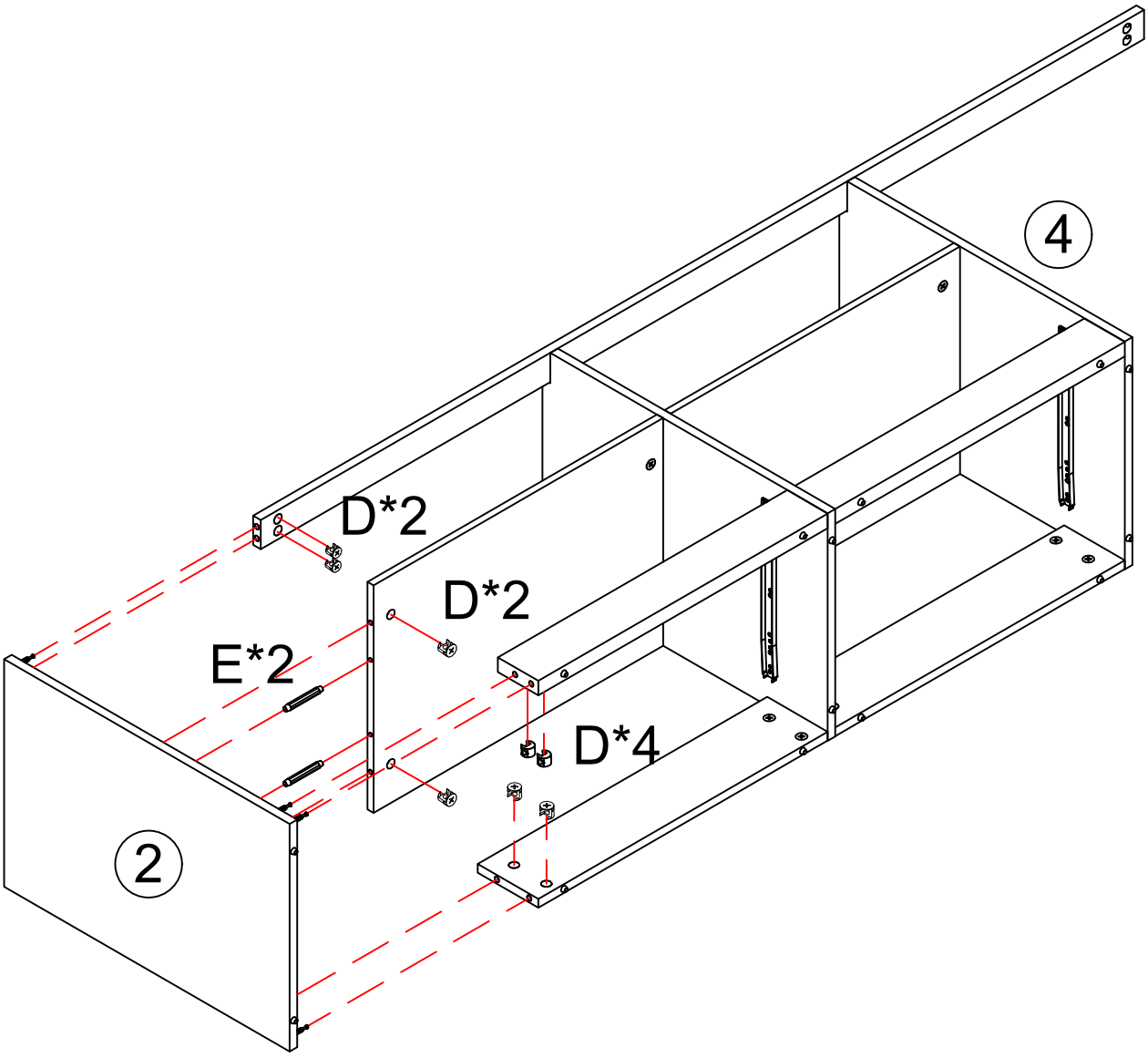

16

M15x9mm



D x 2

Ø6x50mm



E x 2

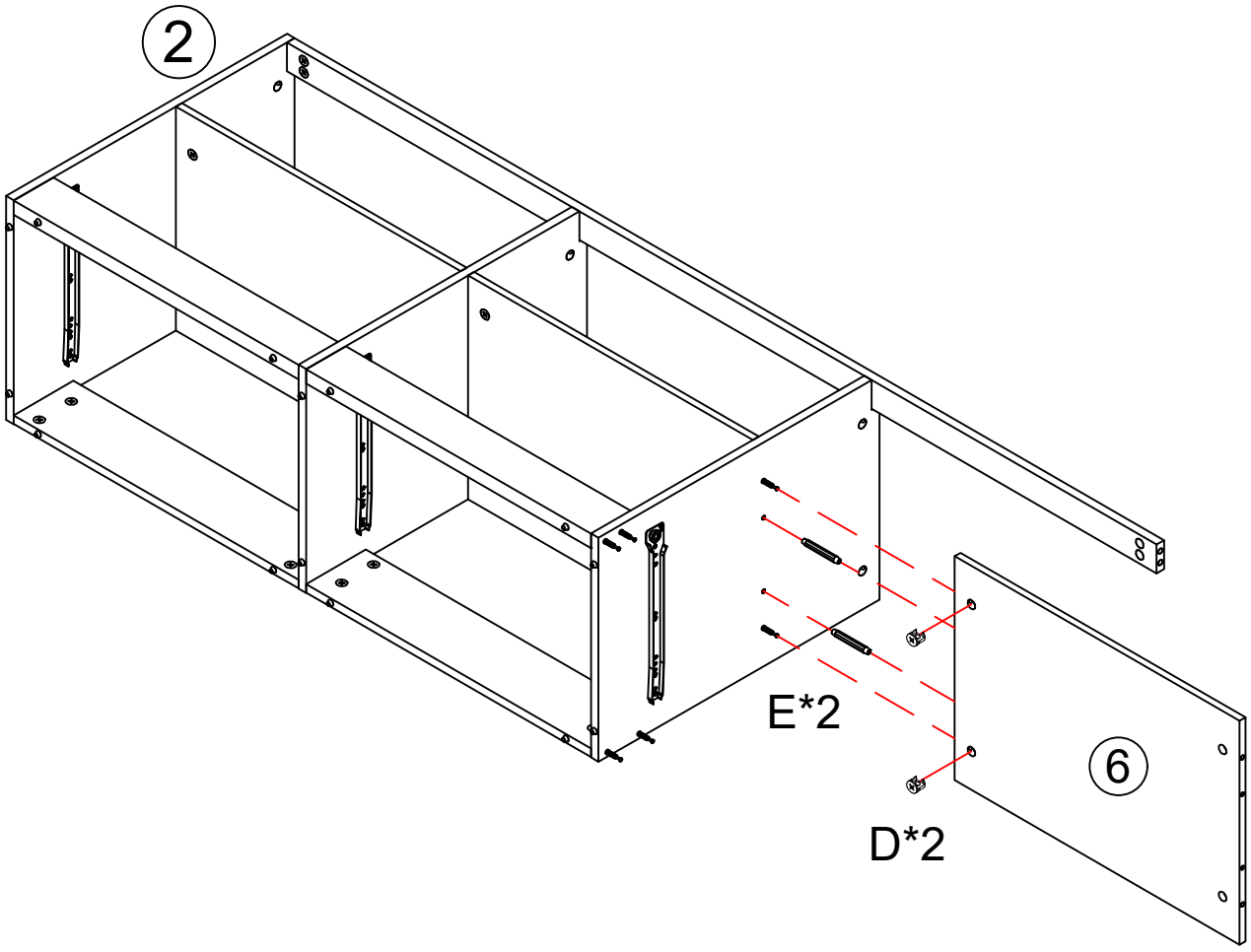

PRODUCT ASSEMBLY

17

M15x9mm



D x 4

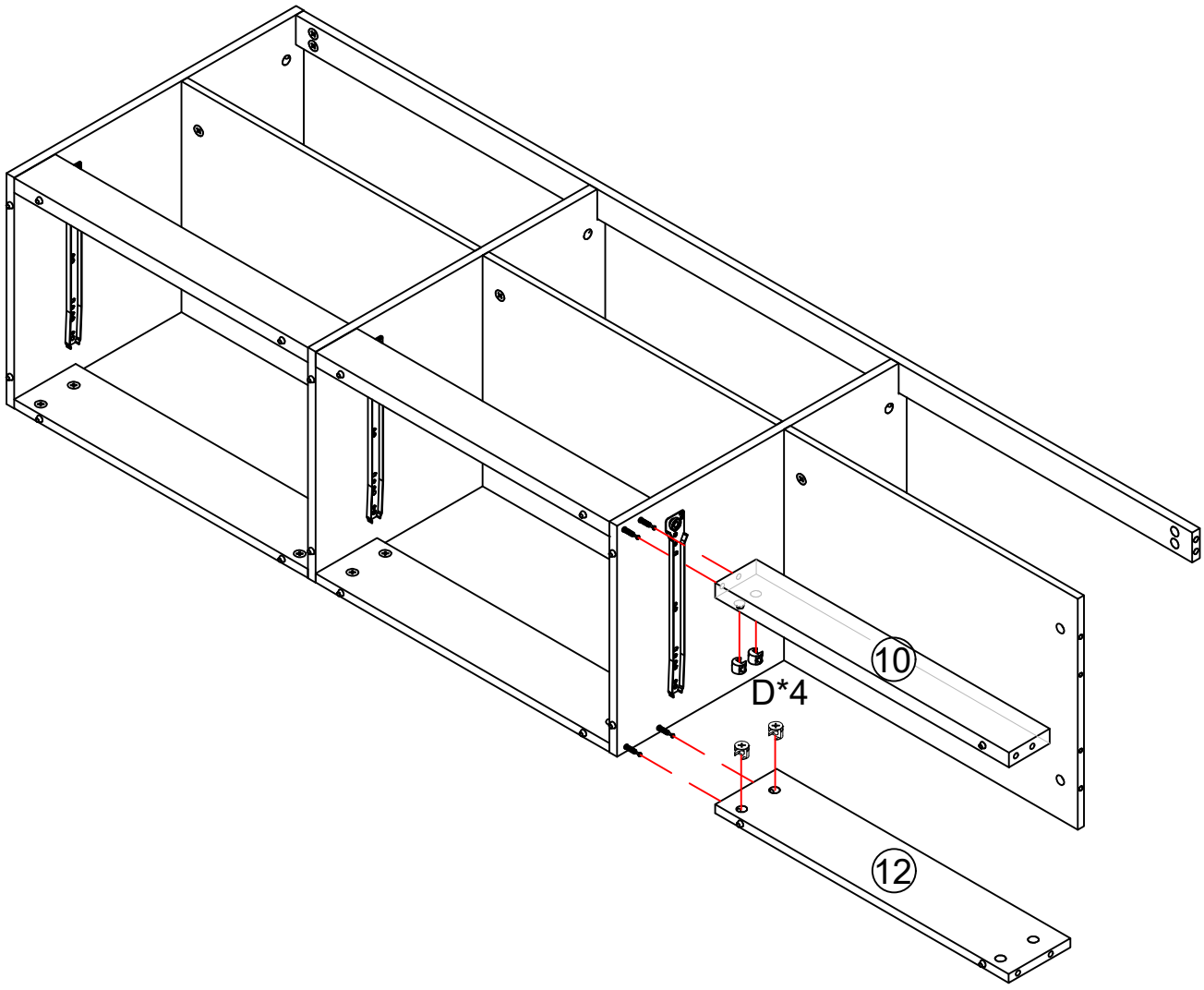

18

M15x9mm



D x8

Ø6x50mm



E x 2

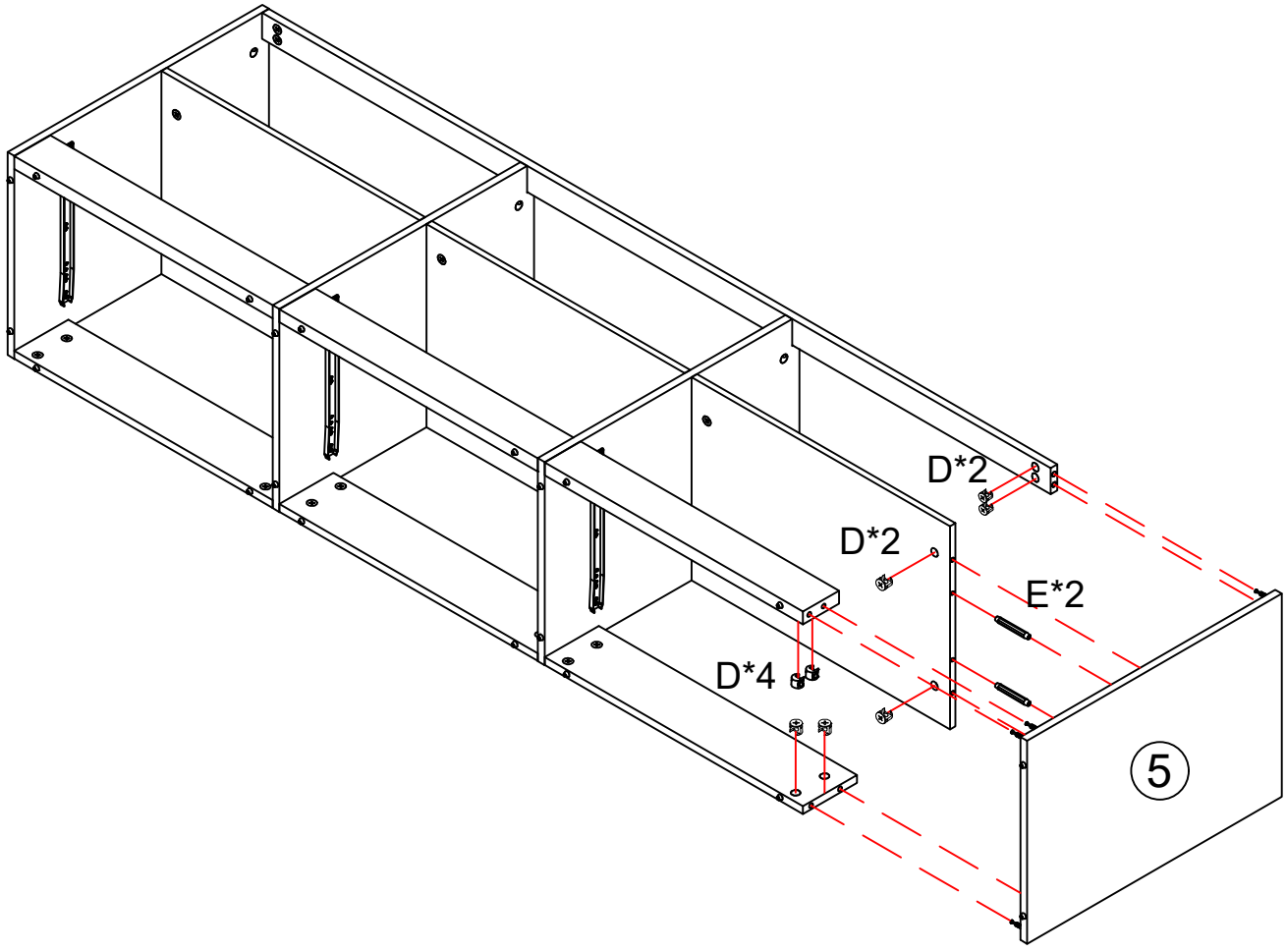

19

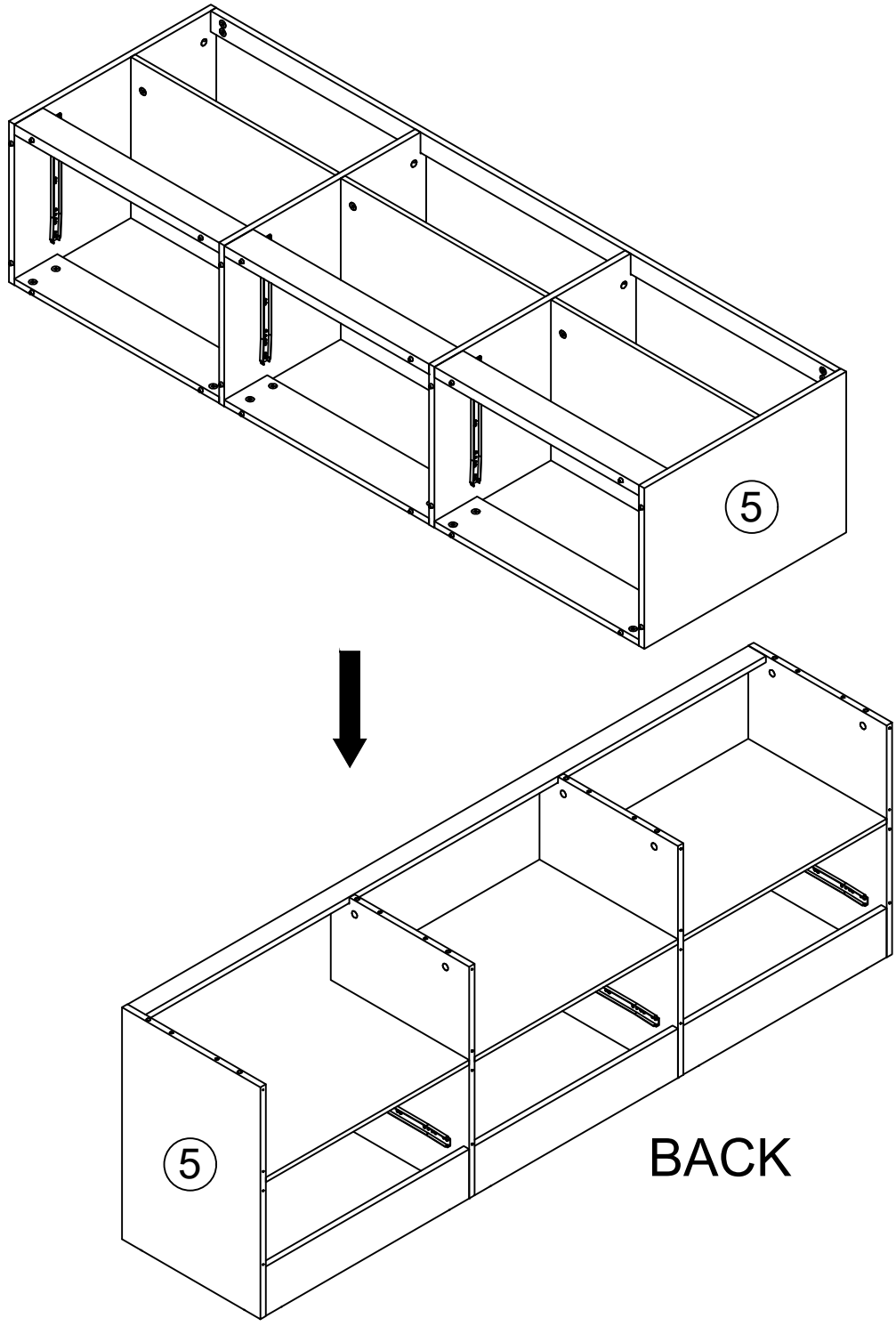

Pls careful to turn over the produt

20

K M6x40mm	M15x9mm	Ø6x50mm
 C x 8	 D x8	 E x 8

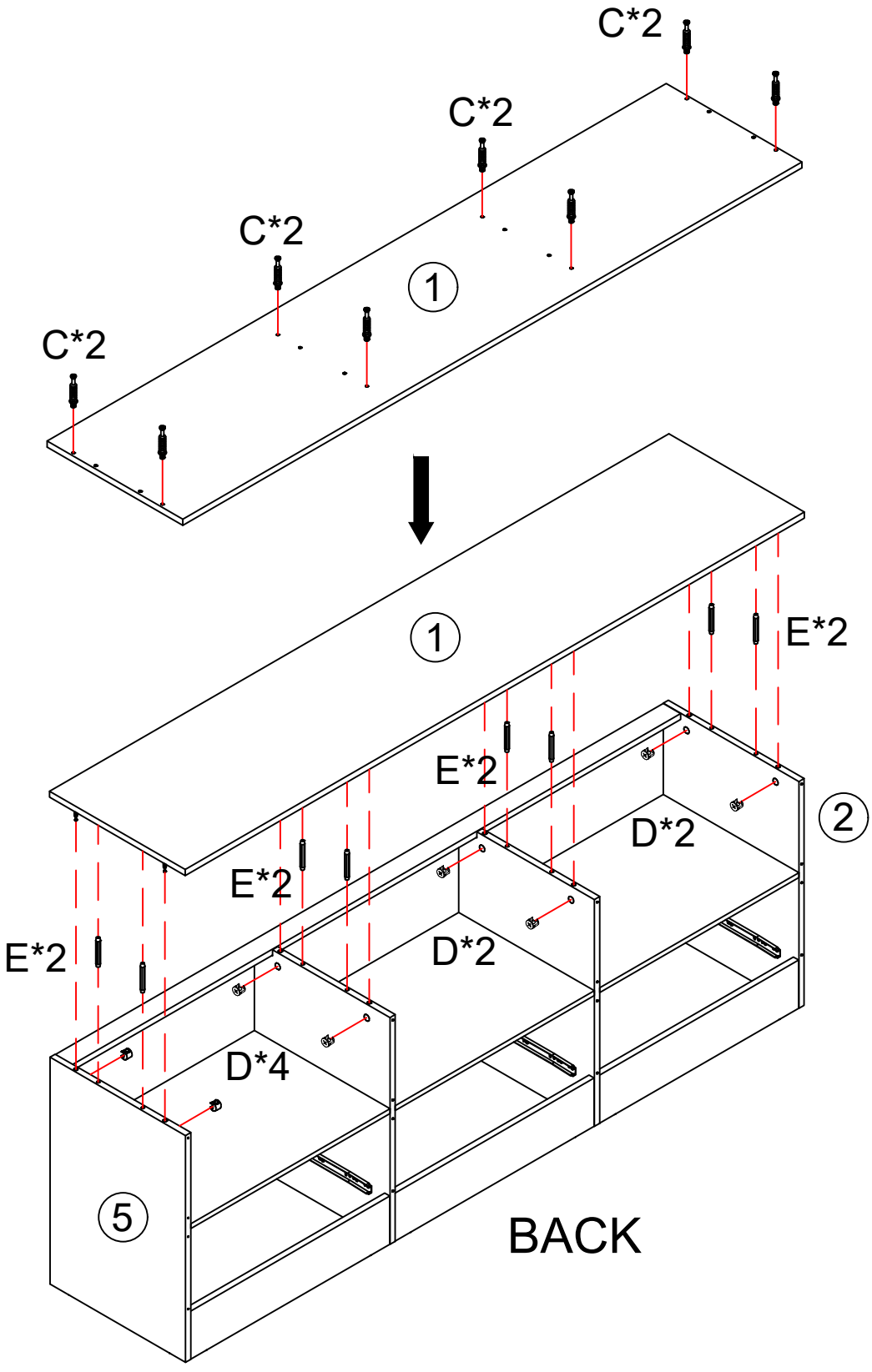

21

Ø3.5x12mm



B x 8

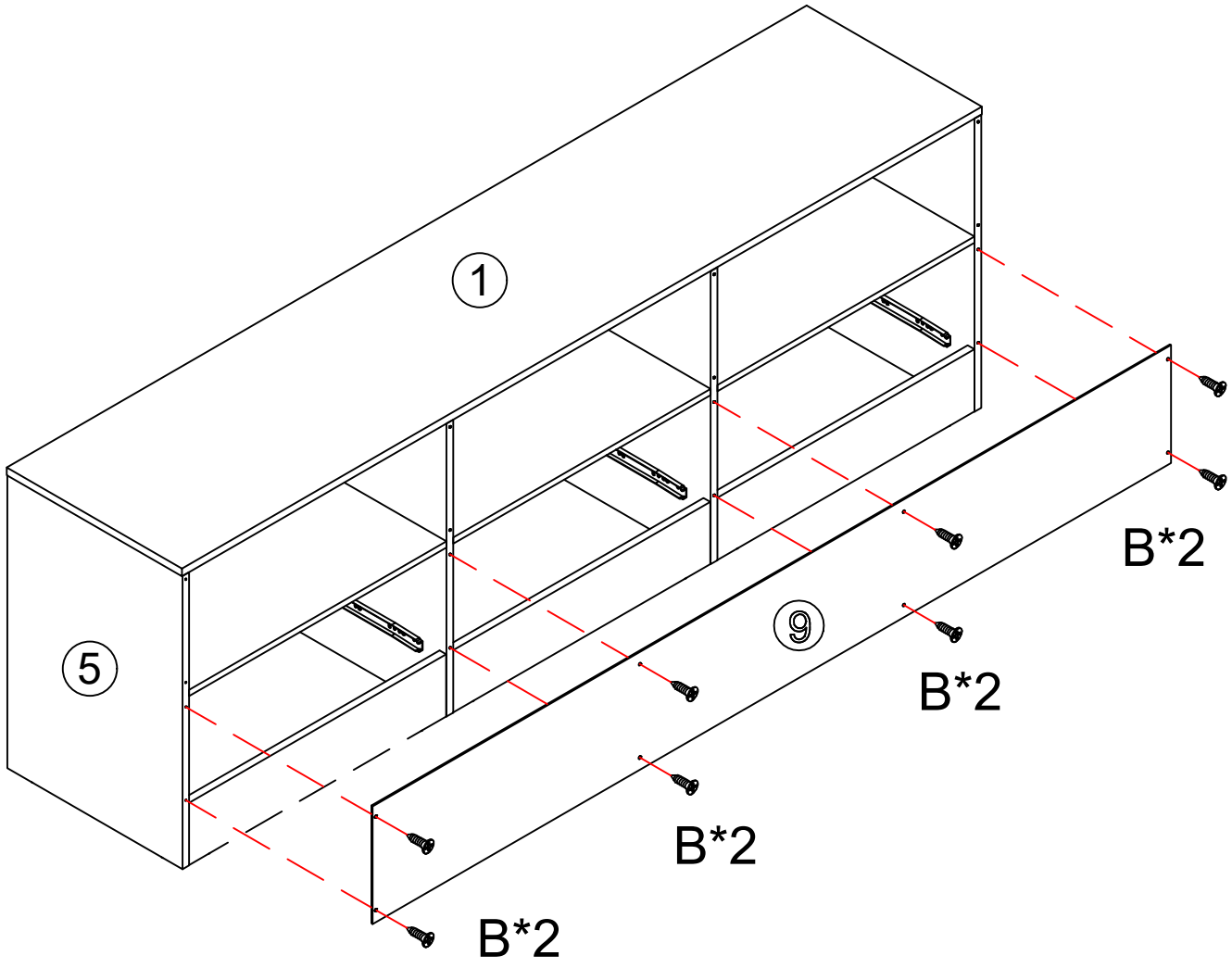

22

Ø3.5x12mm



B x 8

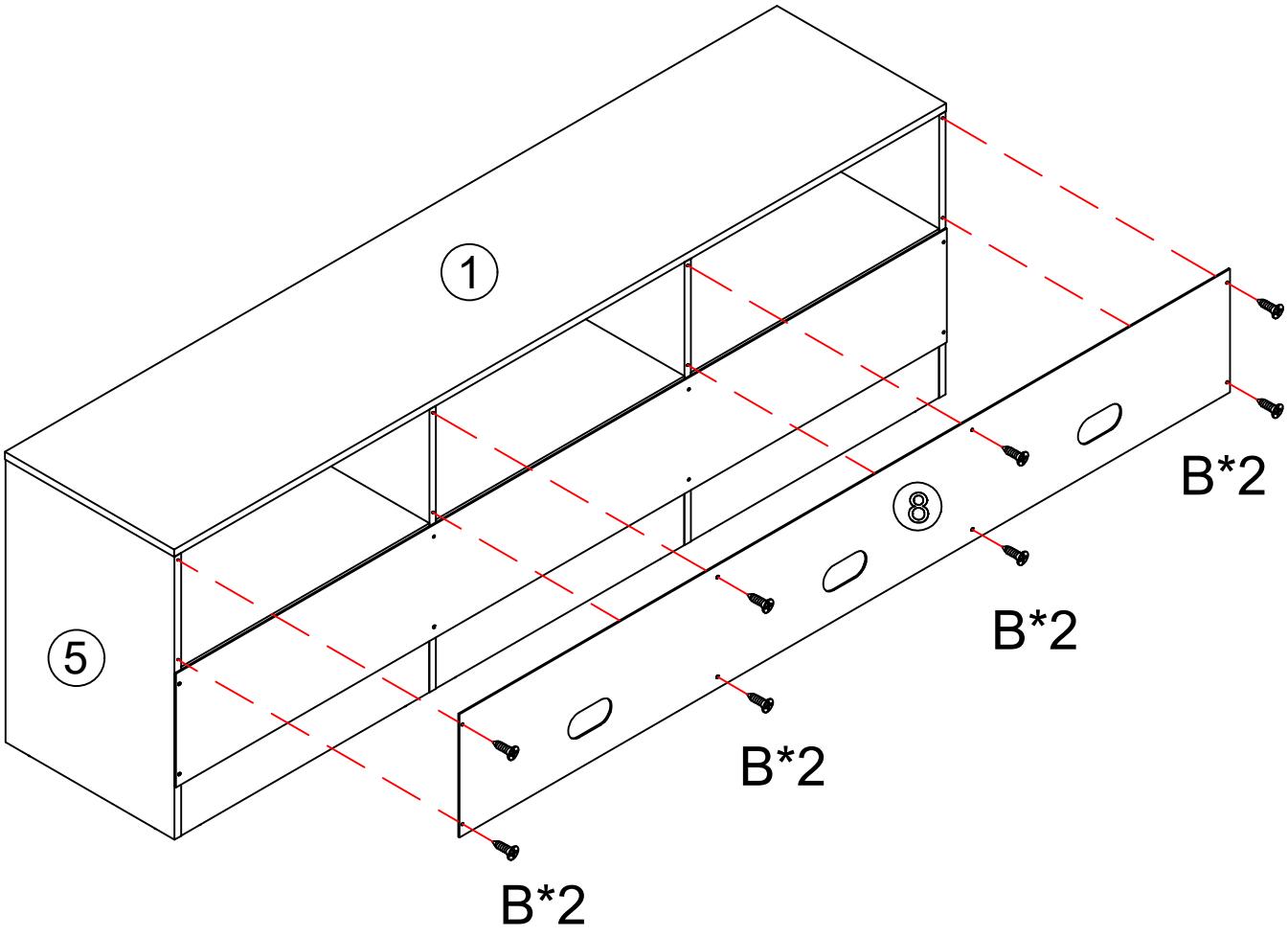

23

Ø5x40mm

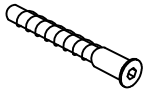

A x 12

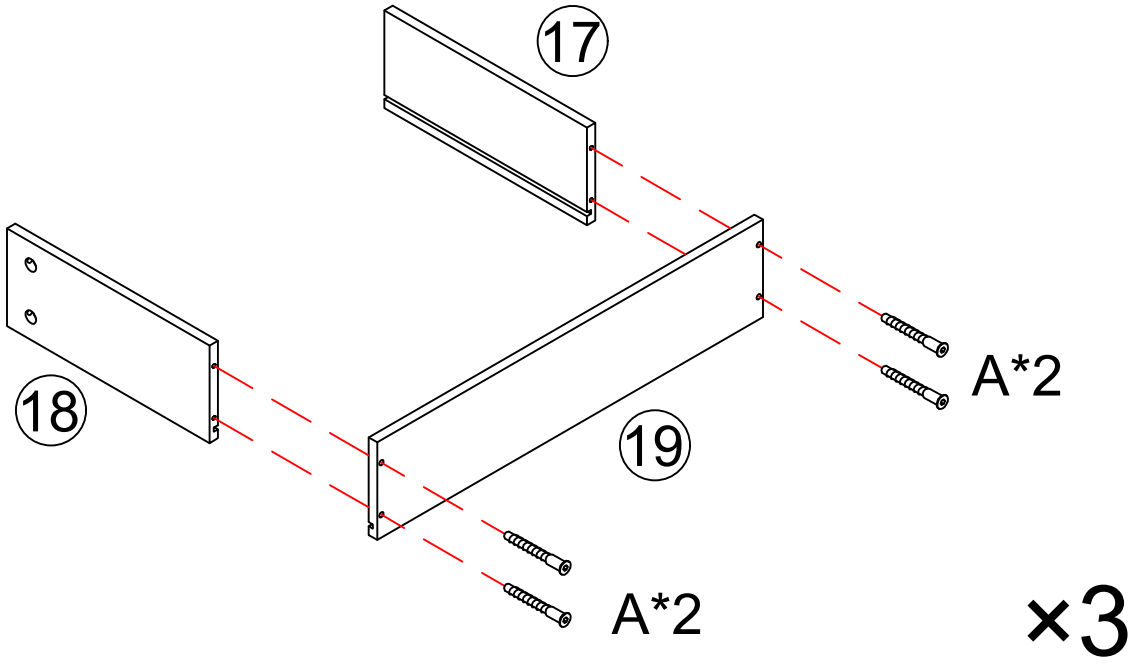

24

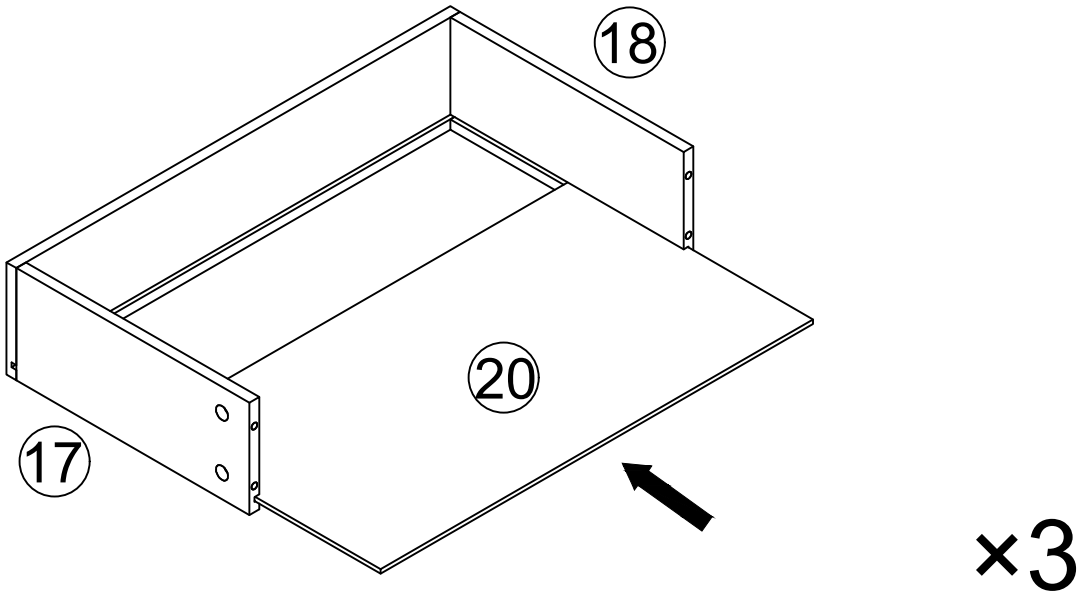

25

K M6x40mm



C x 6

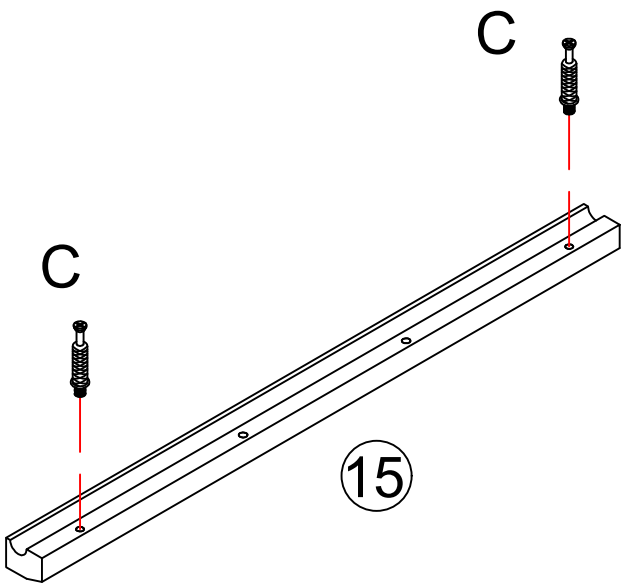

×3

26

K M6x40mm



C x 12

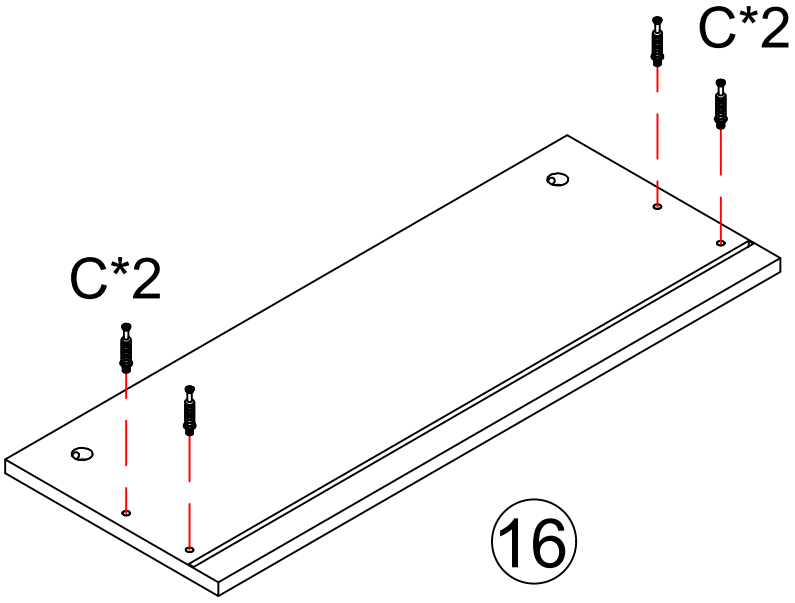

×3

27

M15x9mm



D x6

Ø6x50mm



E x6

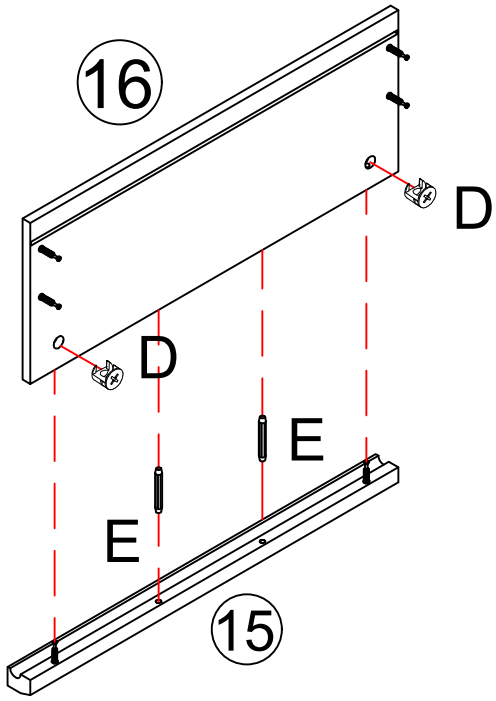

×3

28

M15x9mm



D x12

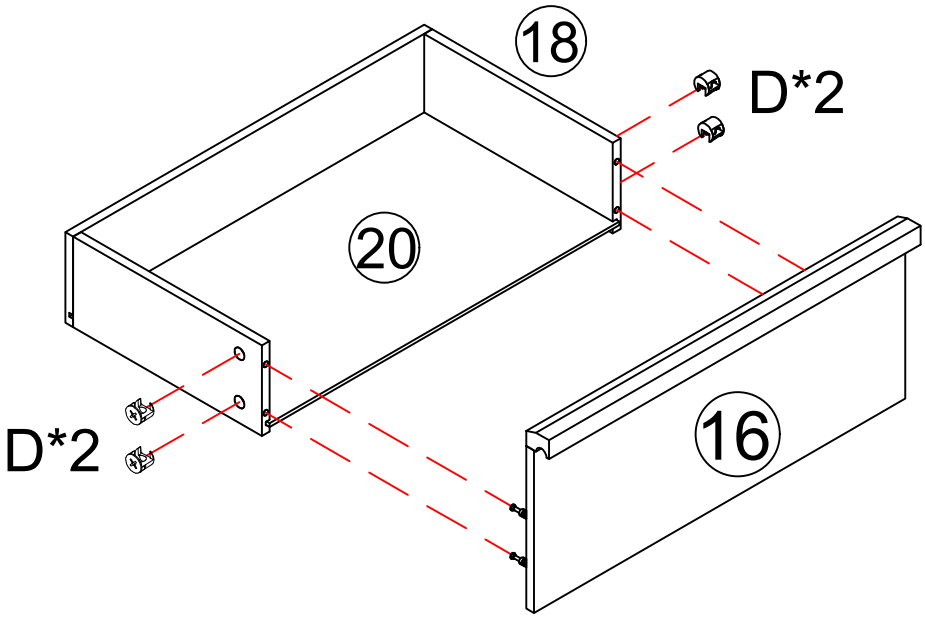

×3

29

Ø3.5x12mm
B x 12

L300
D-L x 3

D-R x 3

Noted the slide roller is nearby the drawer end

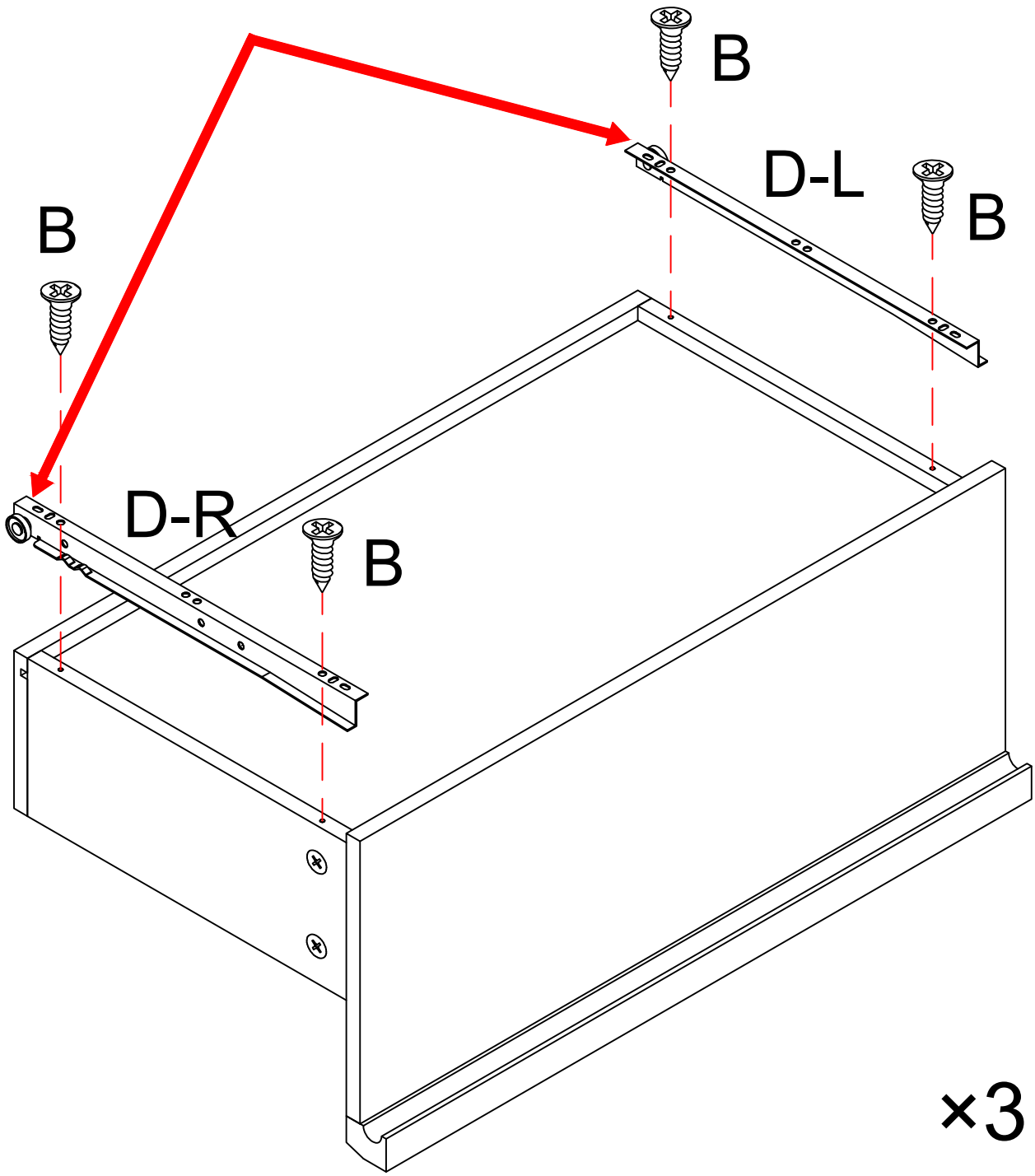

30

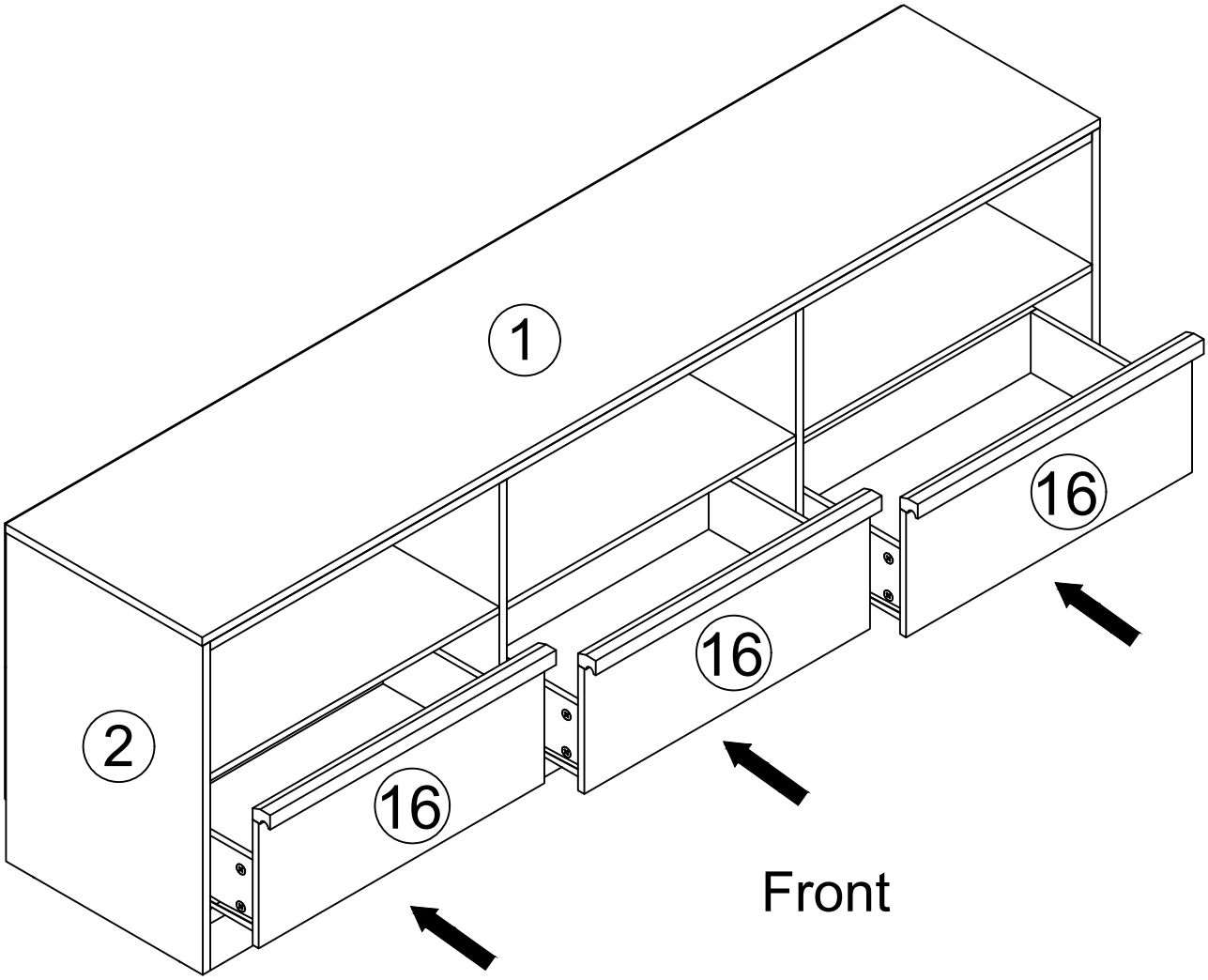

Limited Liability & Warning

No Unauthorized Modifications/Repairs: Do not modify or attempt to repair this product unless you are an authorized technician. Unauthorized actions may create hazards and void all warranties

Misuse & Non-Compliance: We are not liable for any injury, damage, or loss resulting from:

(a) misuse, abuse, neglect, or improper installation;

(b) failure to follow instructions or safety precautions;

(c) use of unauthorized parts/accessories;

(d) unauthorized modifications/repairs;

(e) accidents, natural disasters, or external causes.

If you doubt any step of installation or operation, stop using the product and contact authorized service or the customer support.

LIMITACIÓN DE RESPONSABILIDAD Y ADVERTENCIA

Modificaciones o Reparaciones No Autorizadas: NO modifique ni intente reparar este producto a menos que sea un técnico autorizado. Las acciones no autorizadas pueden generar riesgos y anularán todas las garantías.

Uso Indebido e Incumplimiento: No asumimos responsabilidad alguna por lesiones, daños o pérdidas que resulten de:

(a) uso indebido, abuso, negligencia o instalación incorrecta;

(b) incumplimiento de las instrucciones o precauciones de seguridad;

(c) uso de piezas o accesorios no autorizados;

(d) modificaciones o reparaciones no autorizadas;

(e) accidentes, desastres naturales o causas externas.

Si tiene dudas sobre algún paso de la instalación o el funcionamiento, deje de usar el producto y póngase en contacto con el servicio técnico autorizado o con atención al cliente.