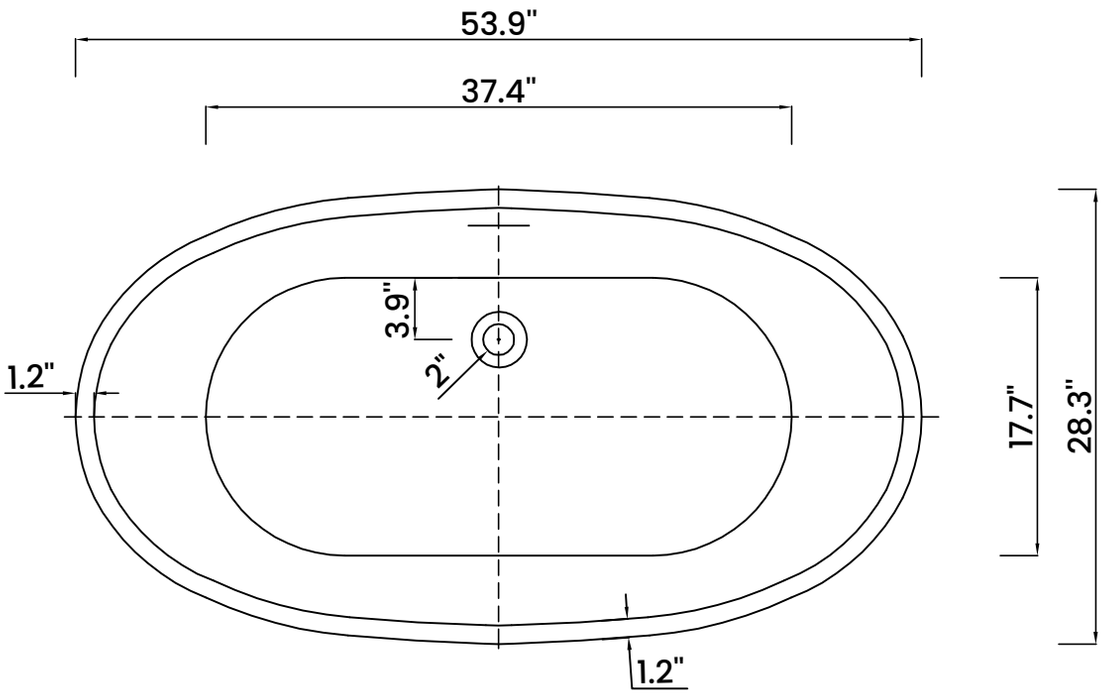
53.9"
37.4"
3.9"
2"
1.2"
17.7"
28.3"
1.2"

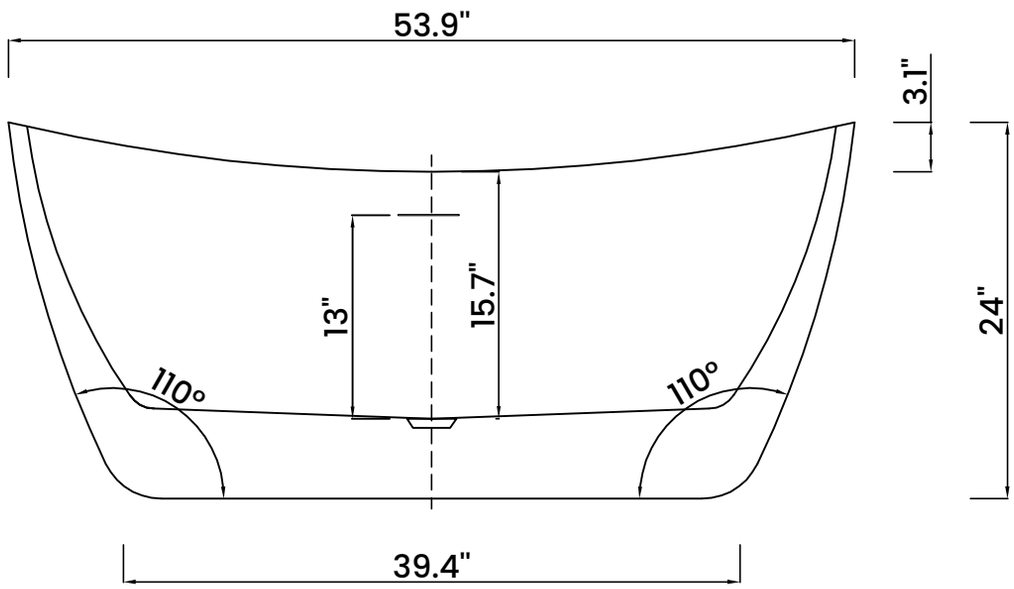
53.9"
3.1"
13"
15.7"
24"
110°
110°
39.4"

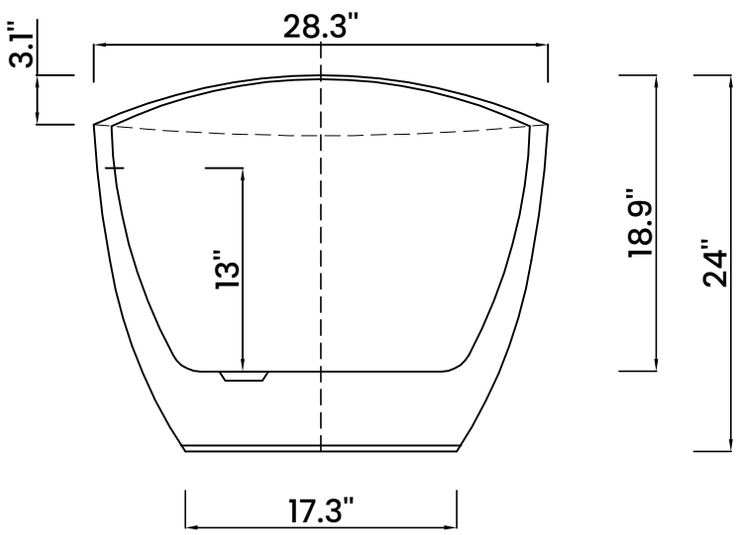
28.3"
3.1"
13"
18.9"
24"
17.3"