Fontana Chicken Barn

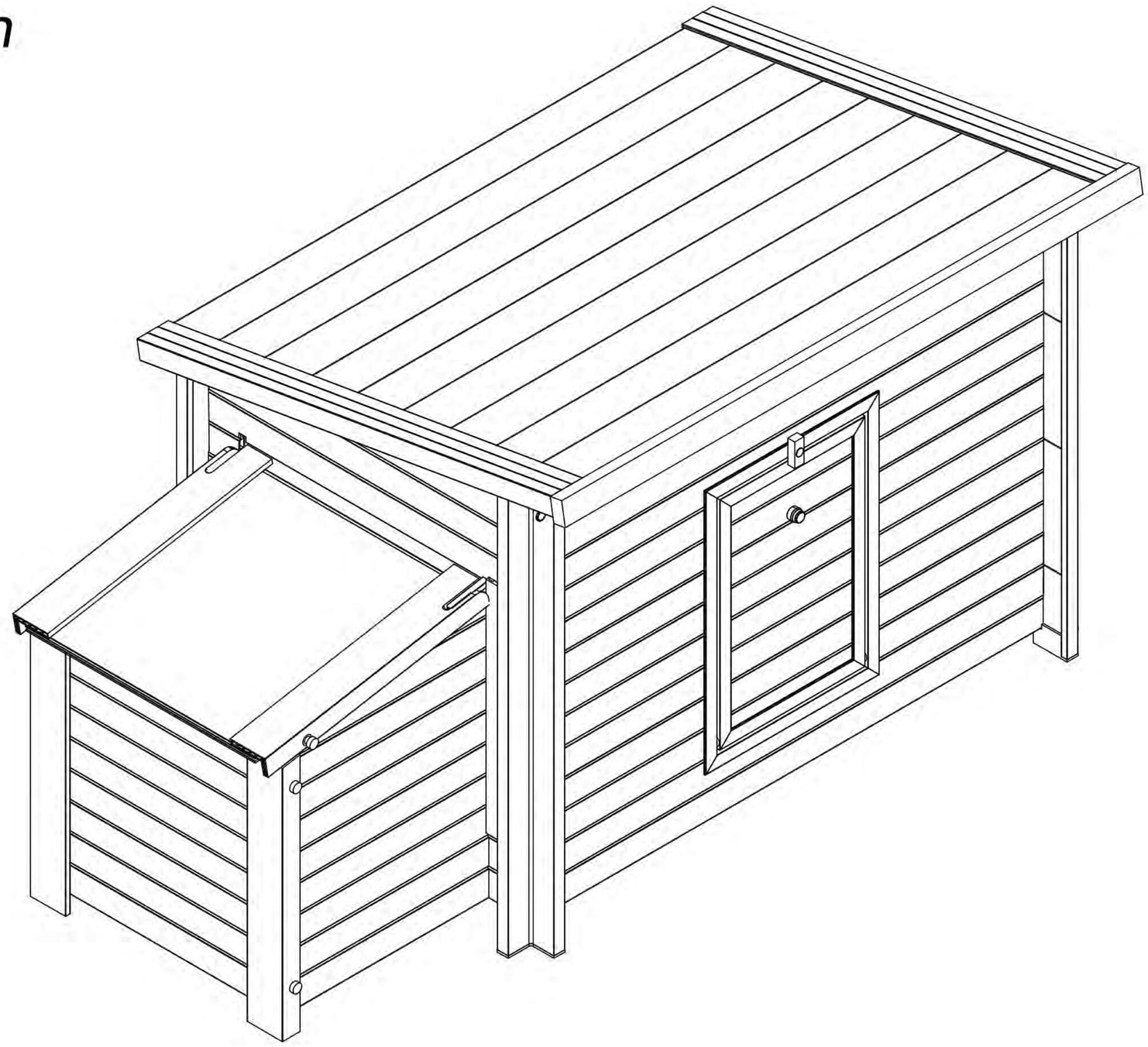

Parts List

Panels Part#1 - Part#43

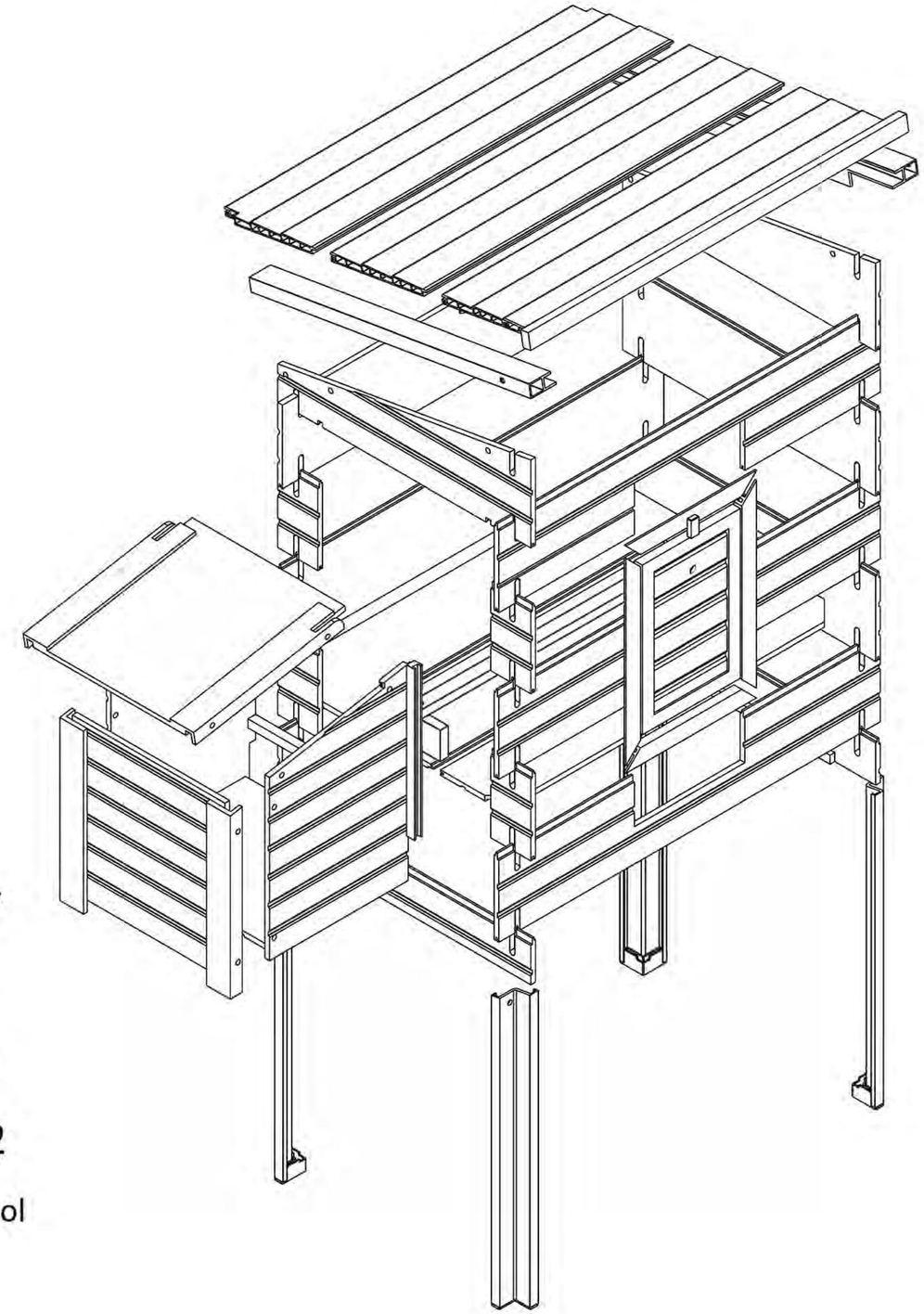

Hardware:

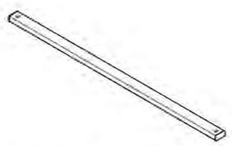

(A) × 2

Floor Support Bar

(B) × 9

Thumb Screw

(C) × 1

Roof Support Bar

(D) × 2

Long Thumb Screw

(E) × 8

Big Nuts

(F) × 7

Short Thumb Screw

(G) × 2

Hinge Pins

(H) × 1

Small Nuts

(I) × 2

Screw Tool

Notes

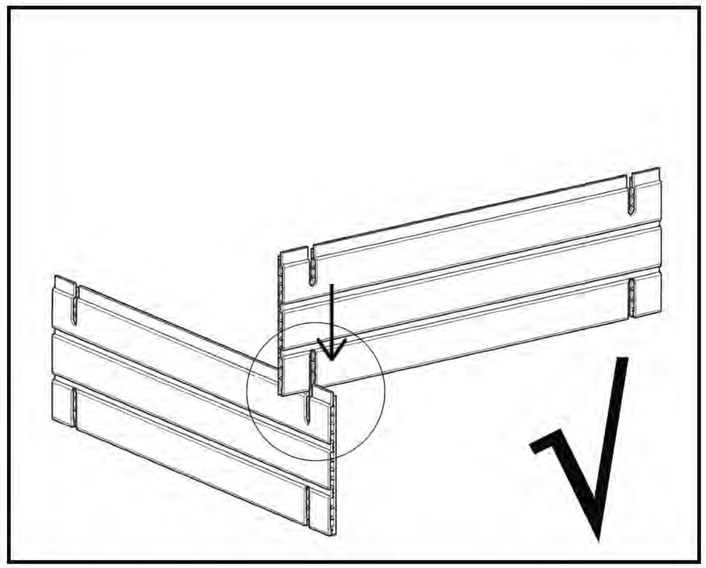

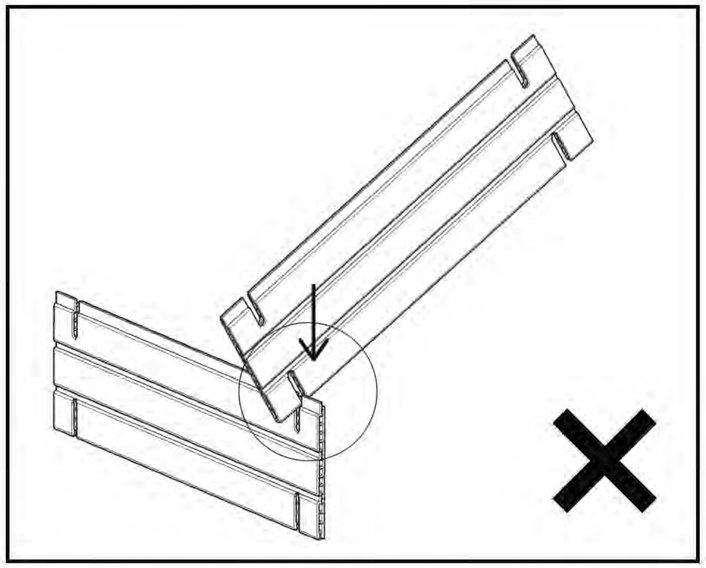

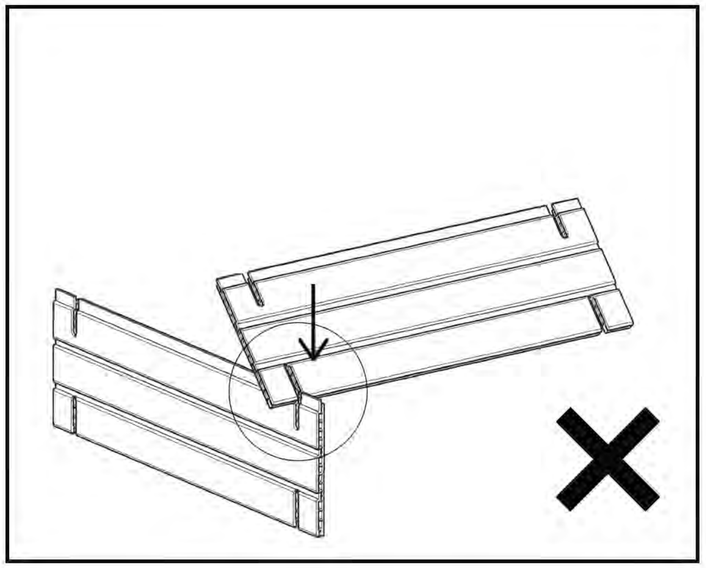

When installing wall panels, make sure the two connecting panels are at a 90 degree angle vertical to the ground, and 90 degree perpendicular to each other. Tilting in any way might cause damage to the groove.

Part Label.

All Parts are labeled in the sequence of assembly.

IMPORTANT ASSEMBLY TIPS

Before the launch of a new New Age product, we have conducted in depth testing and surveys with send users and industry authorities. We thank those who have contributed to the development of the product and have helped with tips on the assembly and maintenance of the products.

- **Assemble on a hard, flat surface.** Once assembled, you can easily move the structure to its final location.

- **Sort the parts by sequence number.** We know you are eager to dive in, but spending a few minutes to sort and layout the parts by ascending number will actually save you time, frustration and possibly missing a step/part in assembly sequence.

- **Note the differences in the panel edges.** For wall, roof and floor panels, we use an industry standard tongue and groove design. Once panel edge has a groove the opposite edge has a tongue. In assembly, the groove always faces down with the exception of floor panels. It is important to make sure the tongue is completely inserted into the groove.

- **Note the difference between the inside and outside of the wall panels.** As a general rule, the smooth side of the panels face to the inside of the structure, the slatted sides face out. Floor panels can be assembled either way.

Step 1.

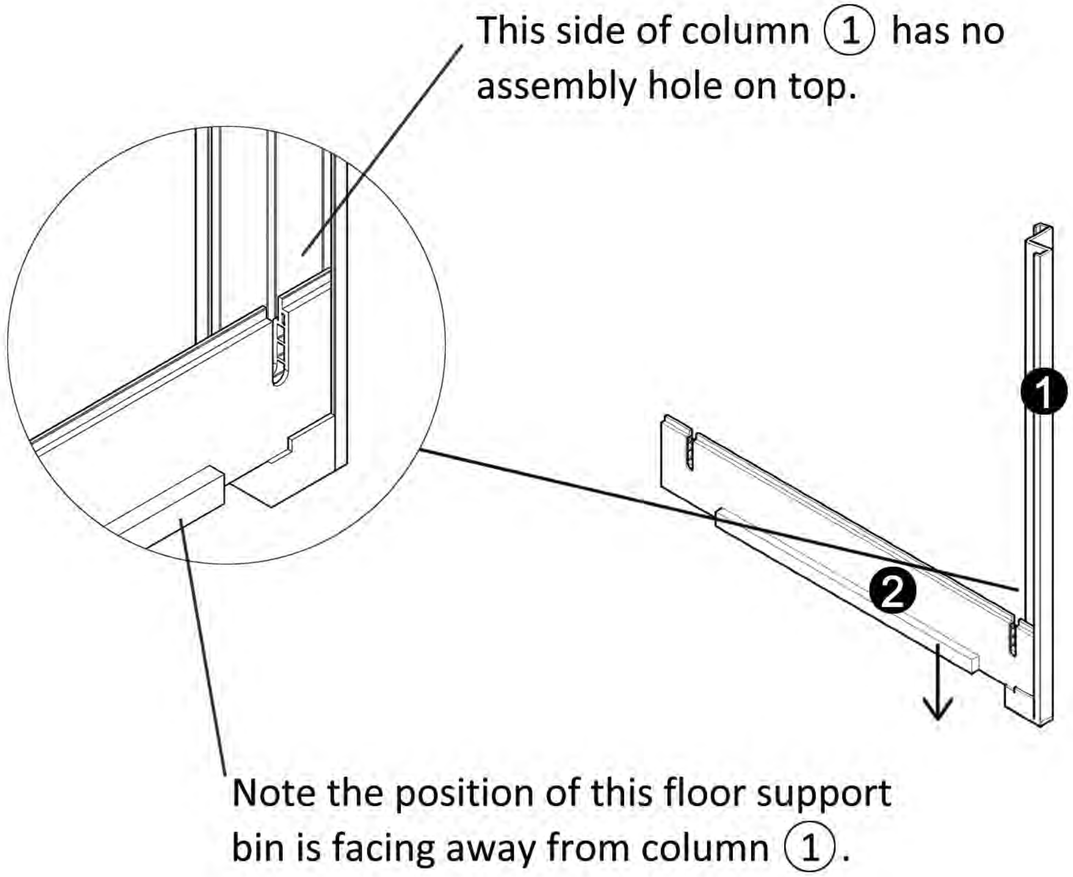

Step 2.

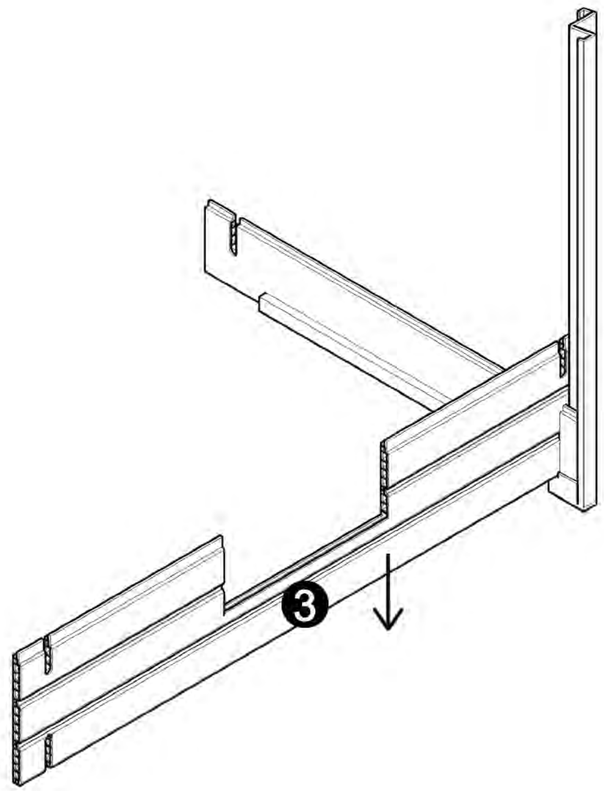

Note: After install Panel 3, make sure the FLAT side of panel 1 and 3 are facing inside, and the slatted sides are facing out.

Step 3.

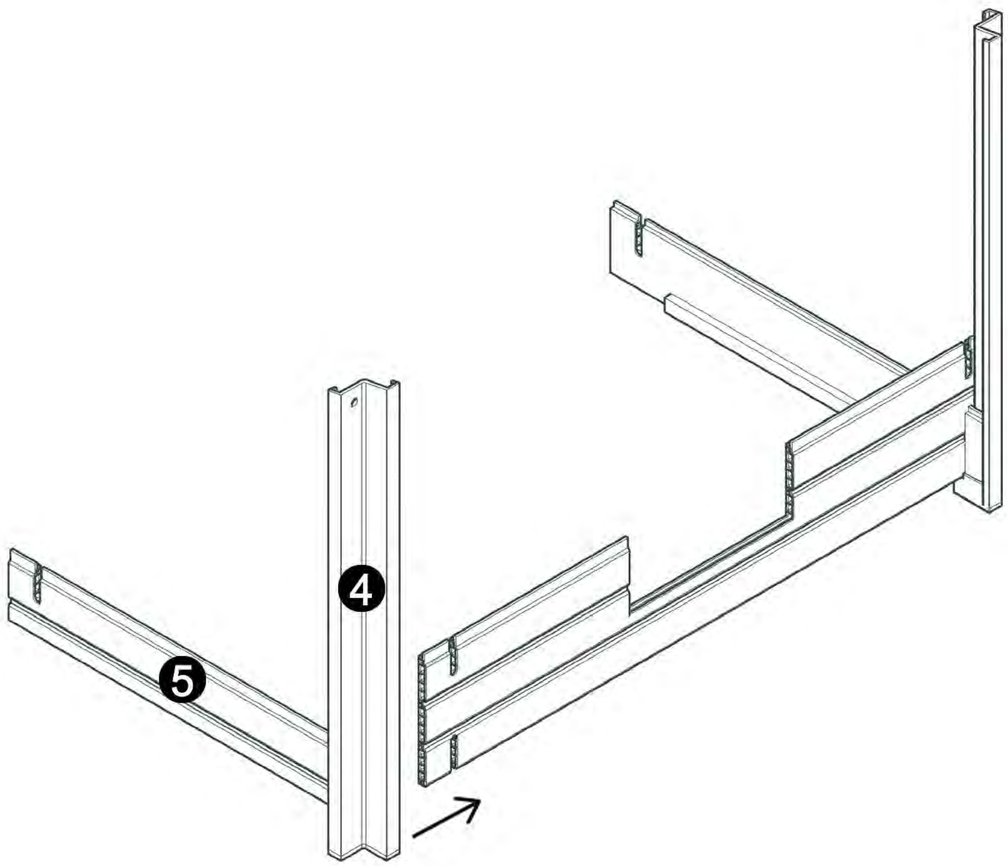

Step 4.

Move assembled parts ④ & ⑤ and ③ near to each other. Lift ③ upward as shown, then tilt ④ & ⑤ so ③ is perpendicular to ⑤. Insert ③ into ⑤.

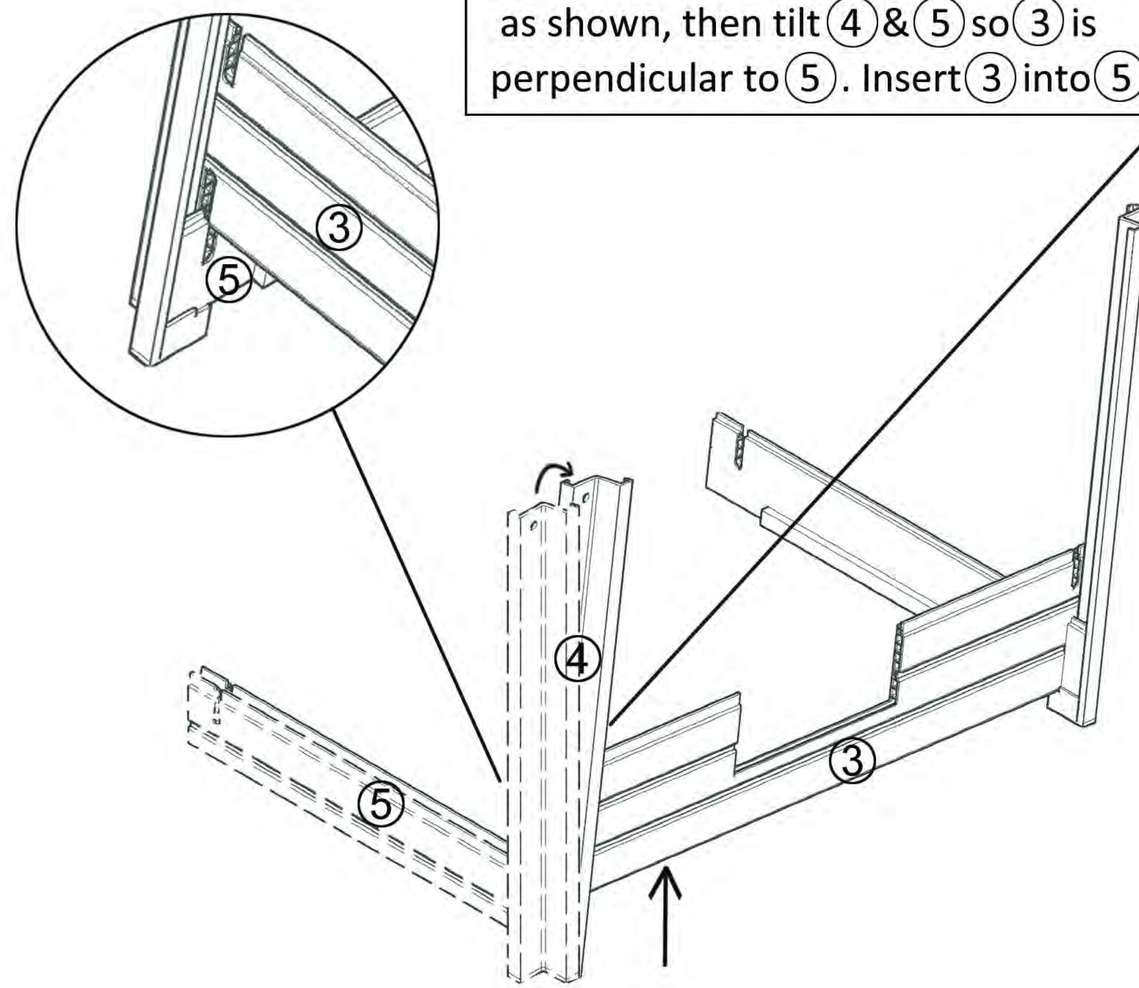

Step 5.

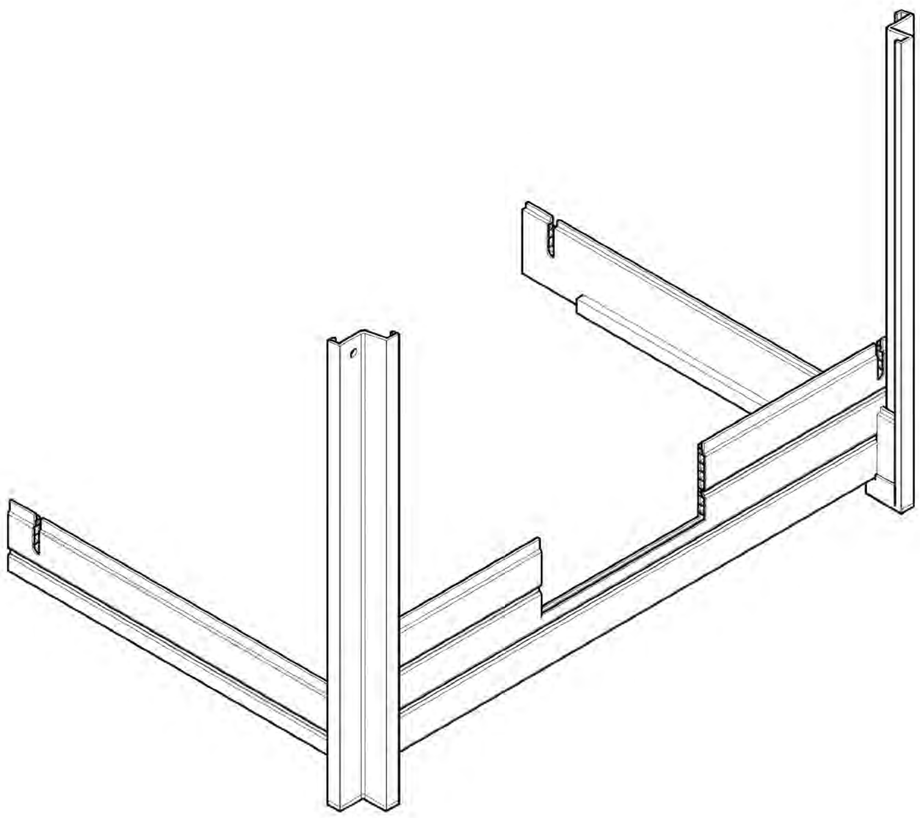

Step 6.

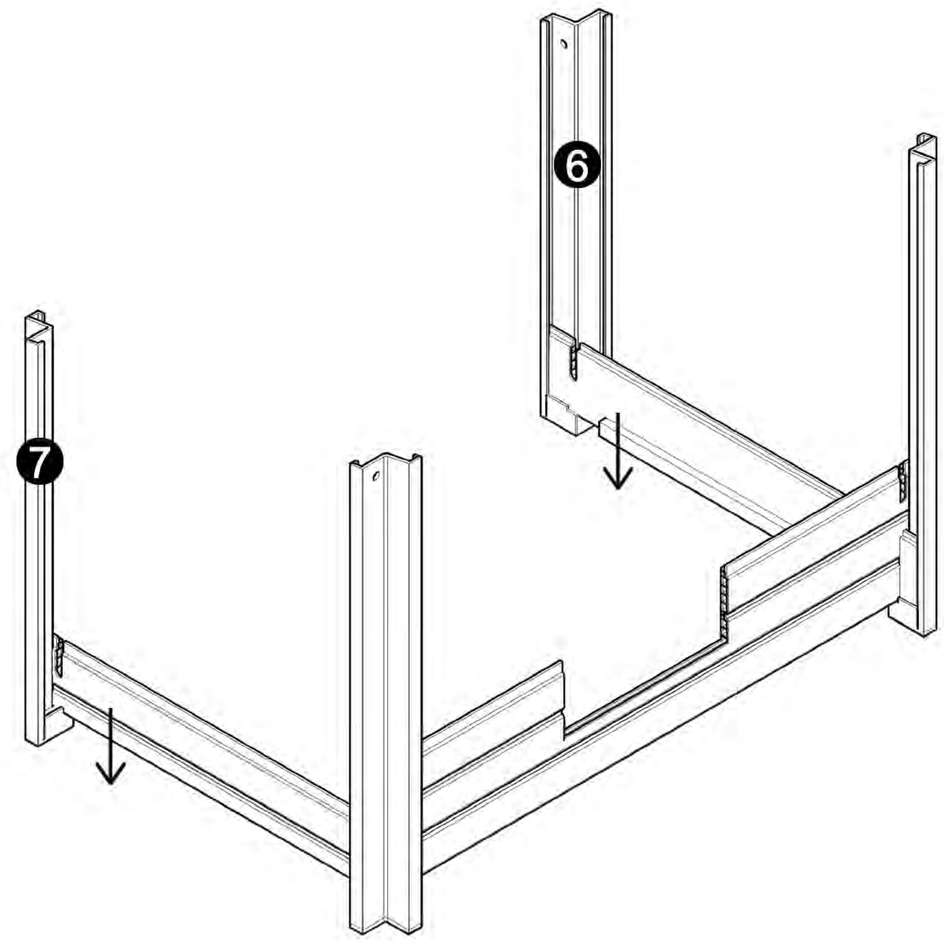

Step 7.

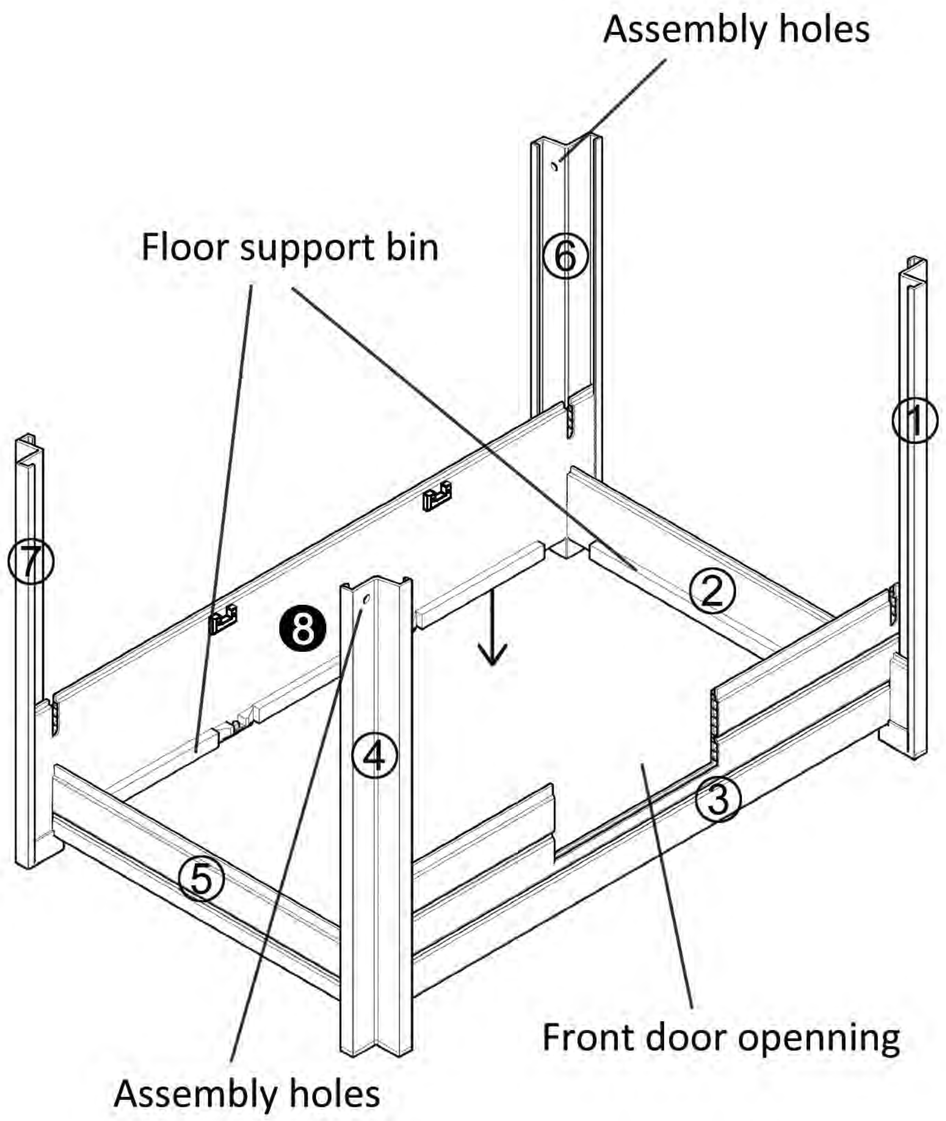

So far you have setup the wall base panels, ②, ③, ⑤ & ⑧; and the 4 column posts. Step back and stand facing the front door open. Do a quick check:

- The FLAT SIDES of the all wall panels are facing inside.
- The floor support brackets are located on the lower edge of the flat side of 3 and 8 panels.
- The assembly holes on the two front columns ① & ④ are facing forwards; while the assembly holes on the two back columns ⑥ & ⑦ are facing each other.

Once you check all the above, you are ready to move on…

Step 8.

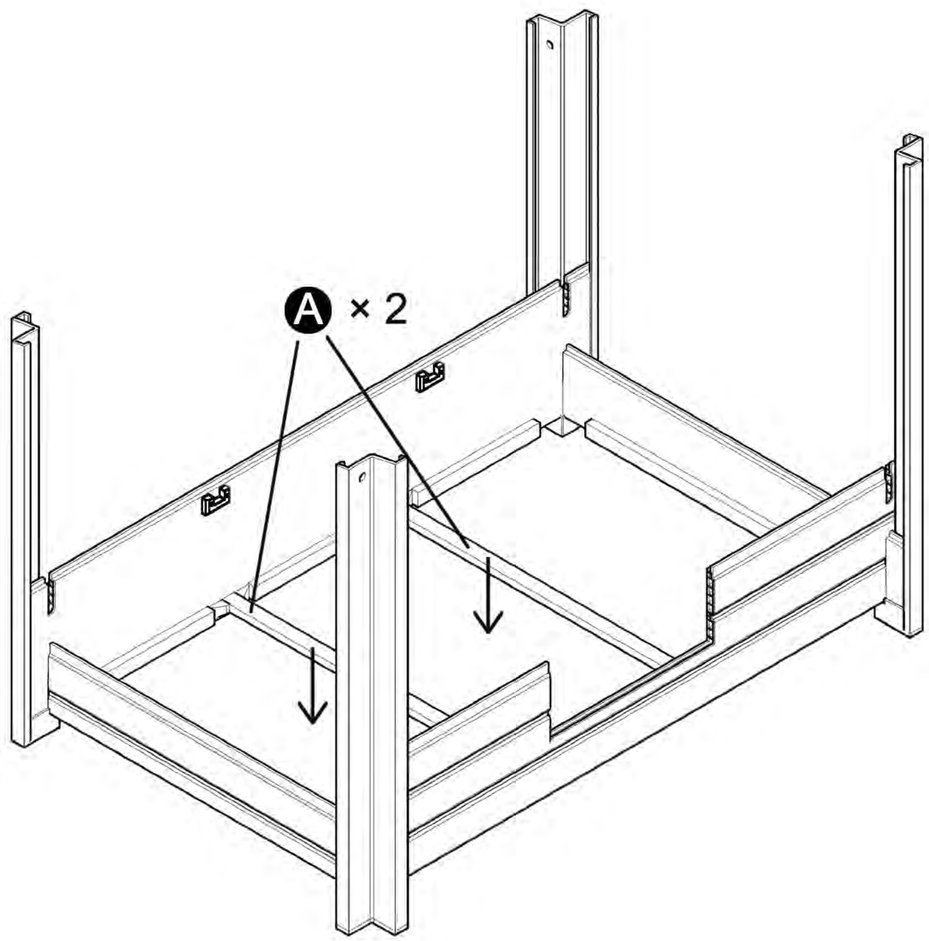

Step 9.

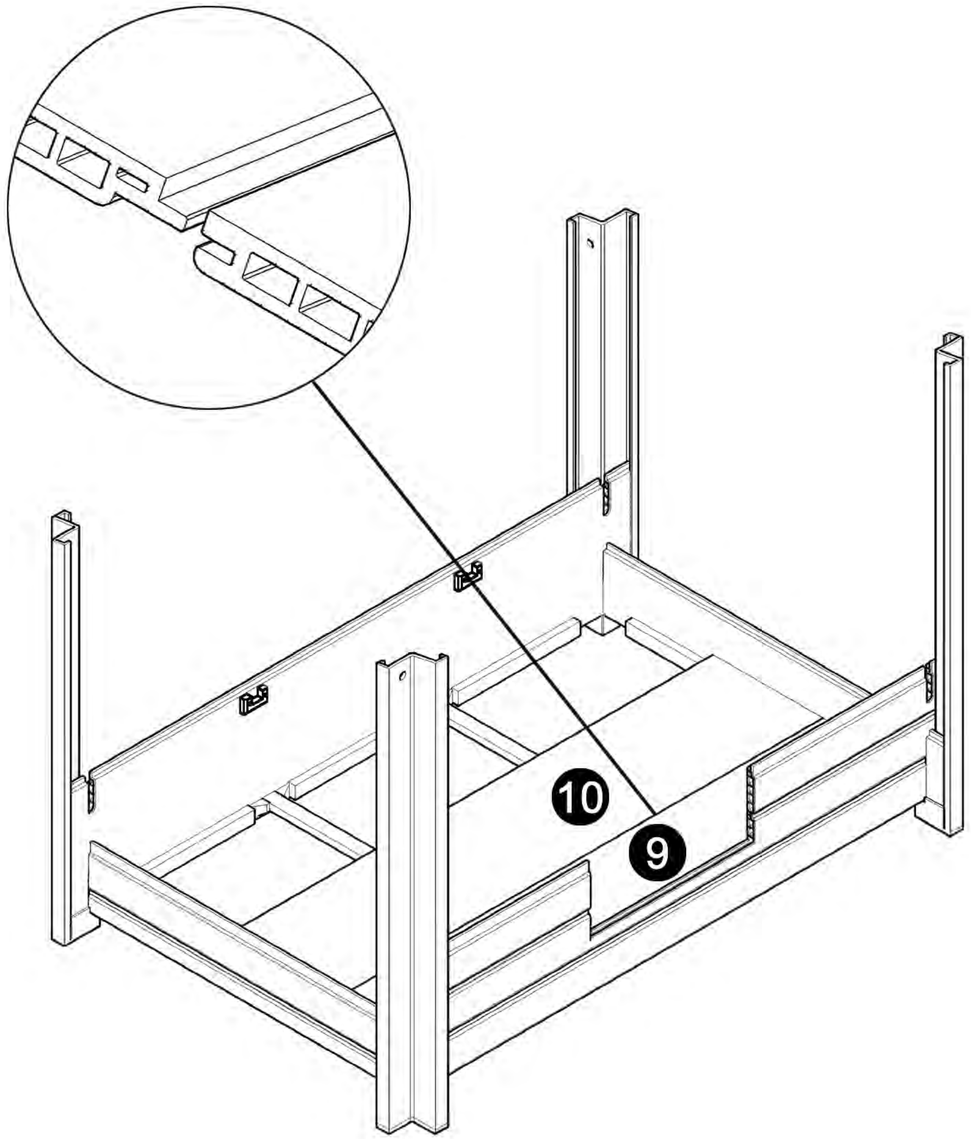

Step 10.

Hold panel ⑪ at the two corner cutouts. Slightly angle ⑪ into ⑩. Release panel ⑪, then gently push it down.

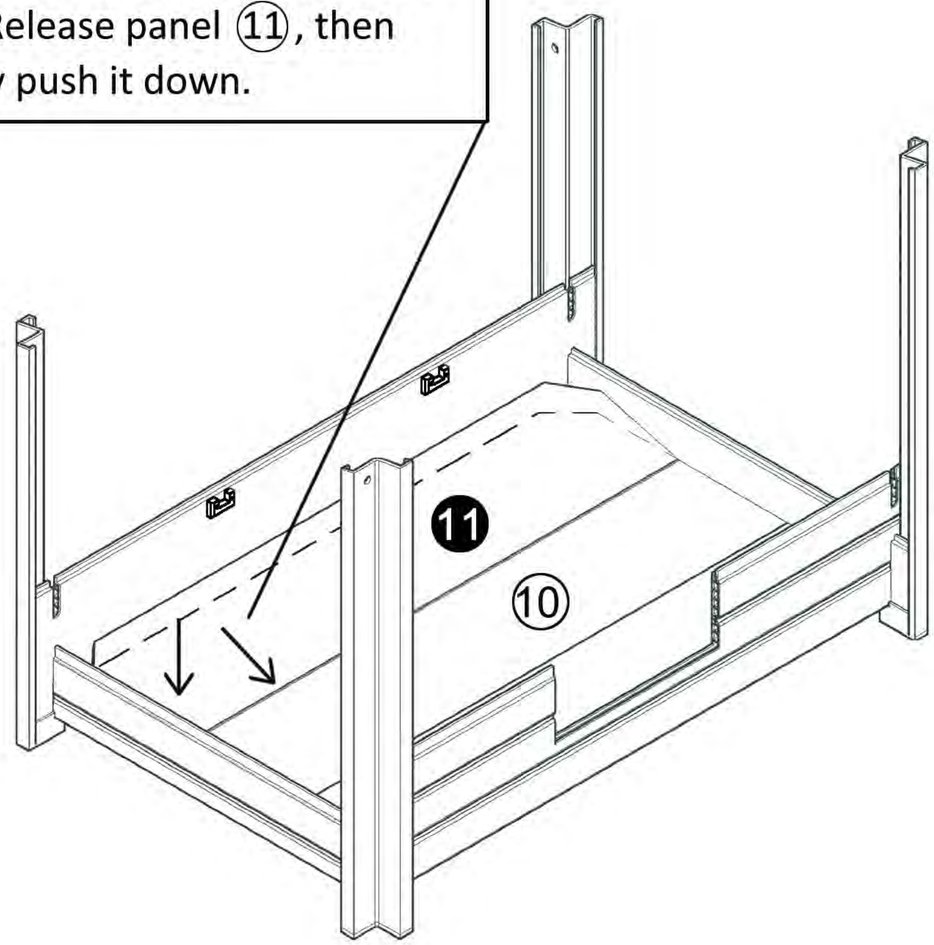

Step 11. (for selected models)

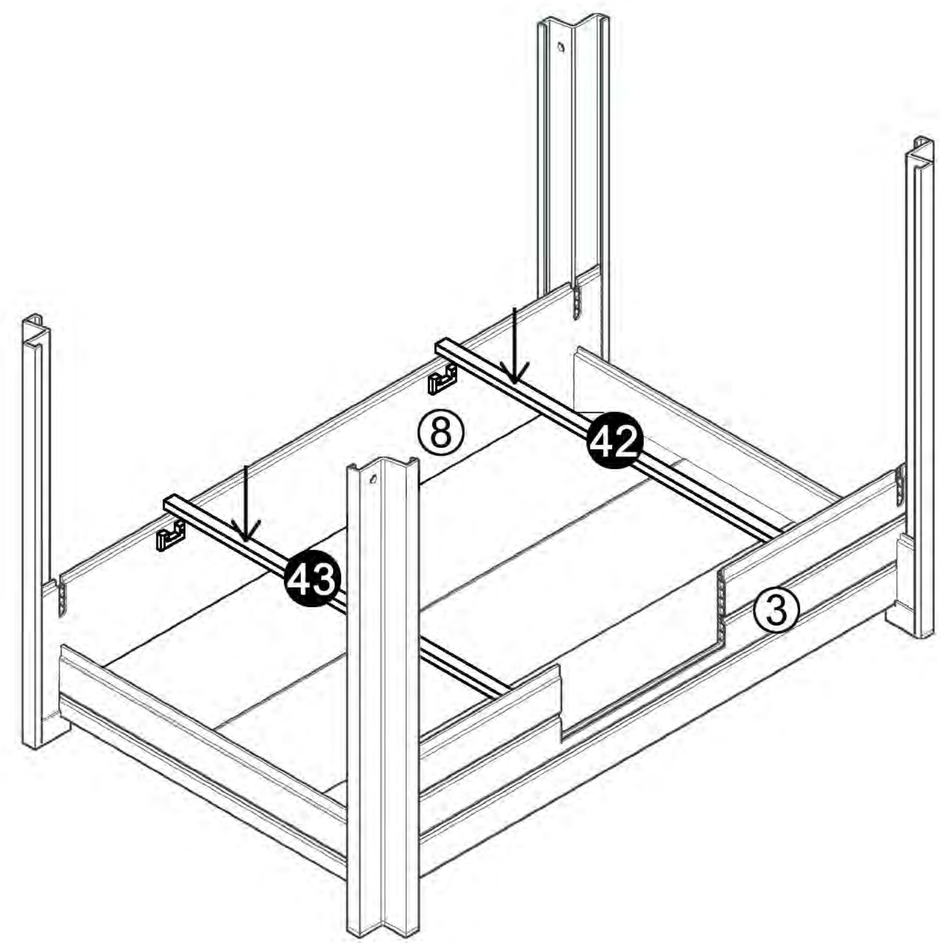

Note: If you chicken barn comes with 2 roosting bars. Put the roosting bars ㊷ and ㊸ into the U-shaped slots on wall panels ③ and ⑧.

Step 12.

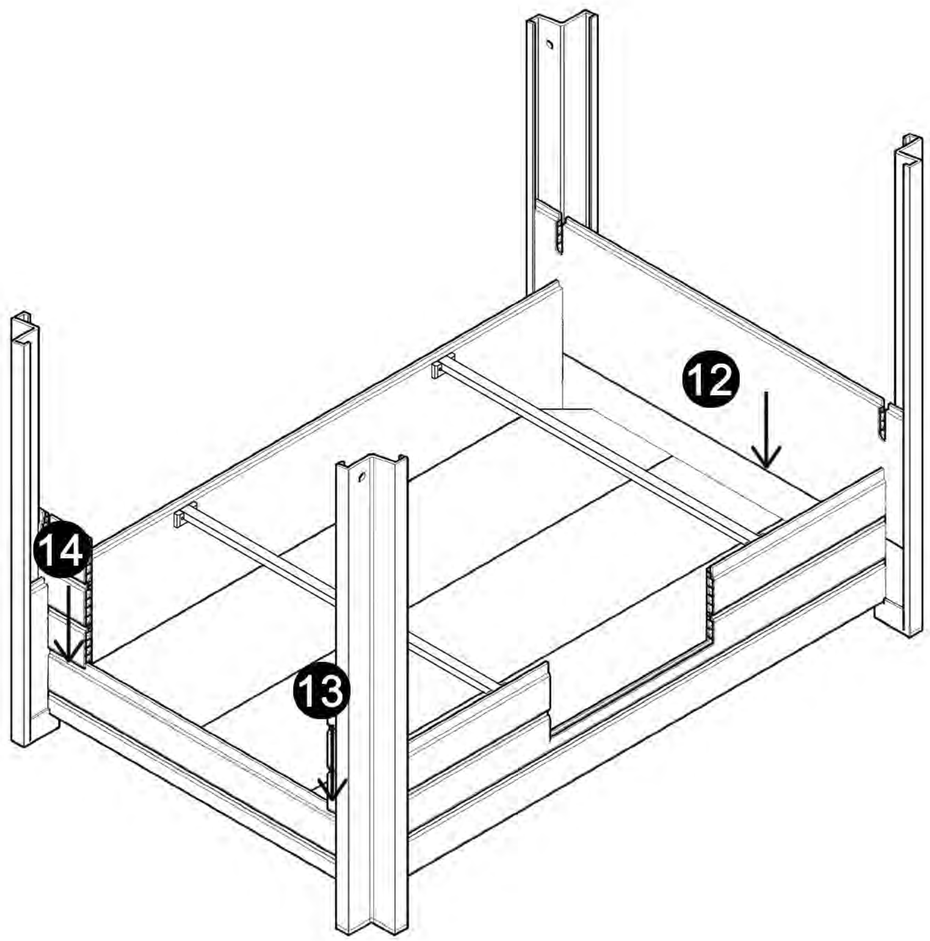

Step 13.

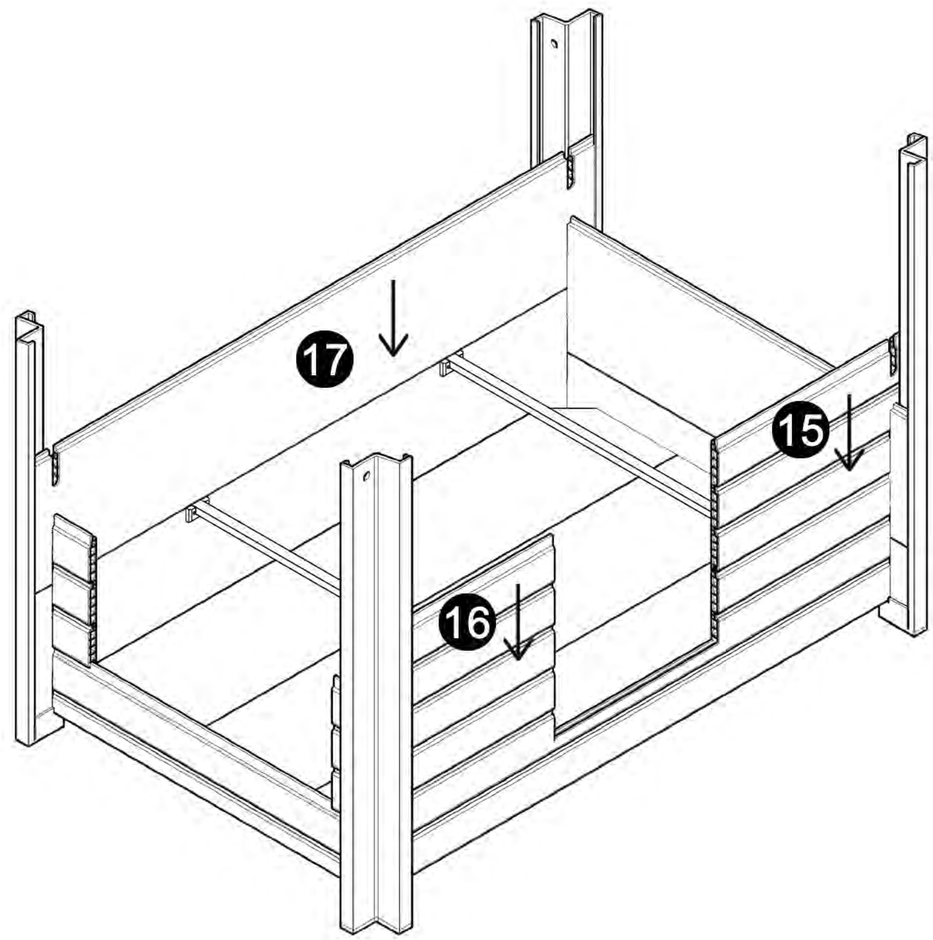

Step 14.

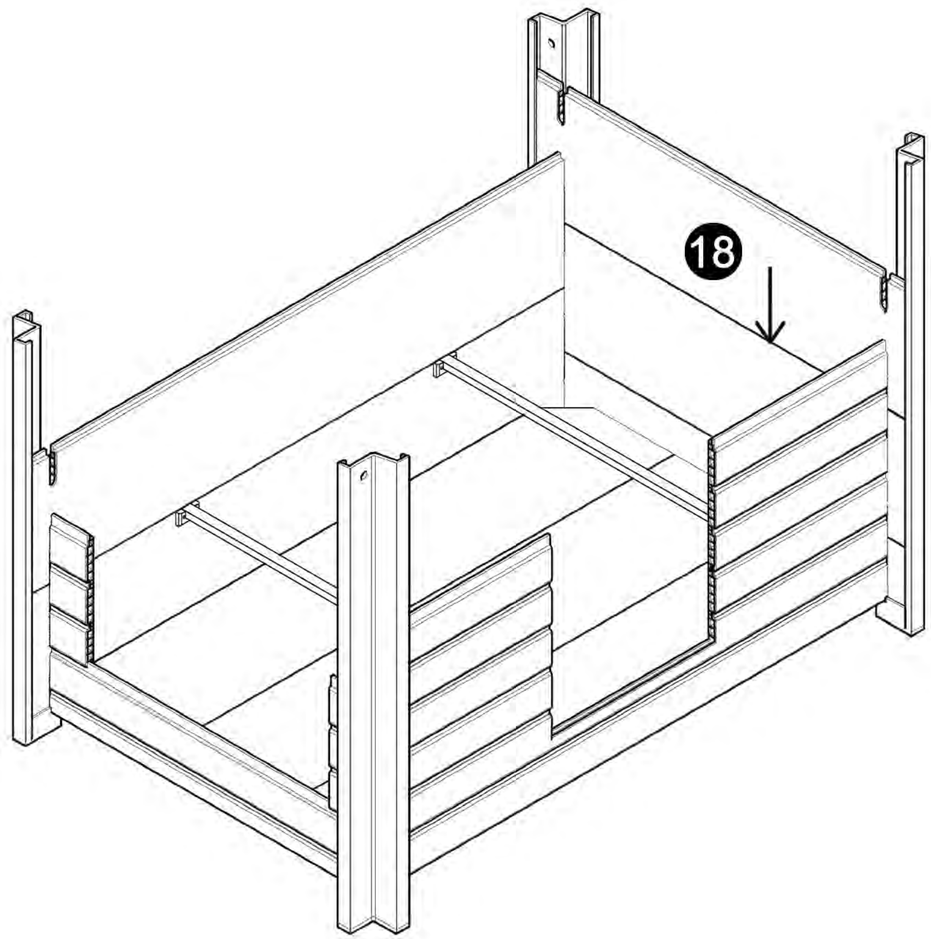

Step 15.

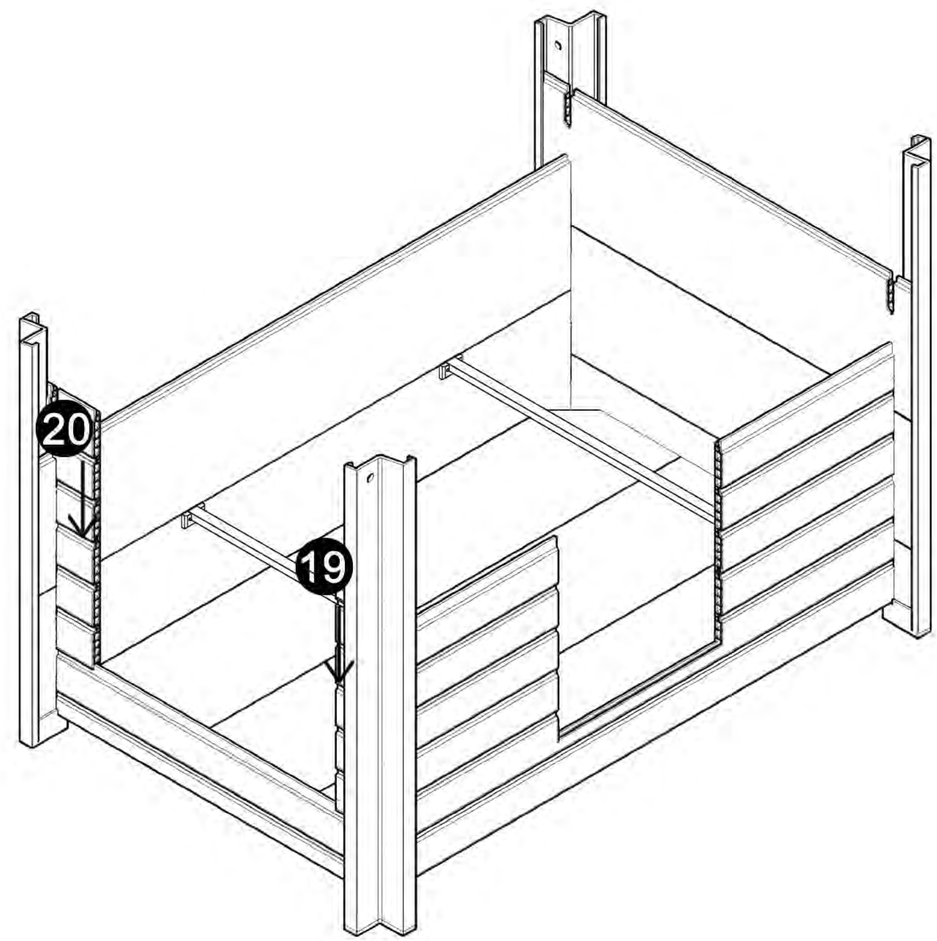

Step 16.

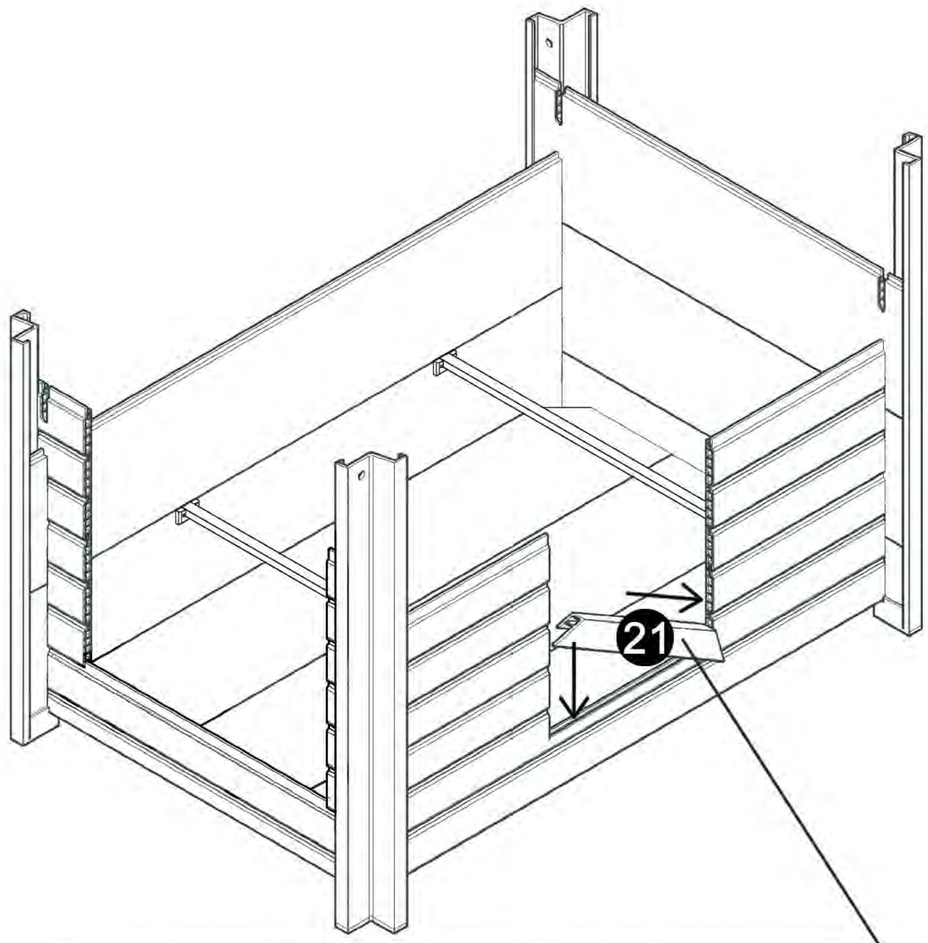

Place door frame (21) into one of the lower corners of the door opening, then push the other end down gently. The side of the frame piece with part # bar code should be facing inside the barn. Same for all door frame pieces.

Step 17.

Insert one end of a pin (G) into the hole in door panel (24), the other end into the hole in door frame (22). Repeat on the other side. Place the assembled unit in the door opening as shown.

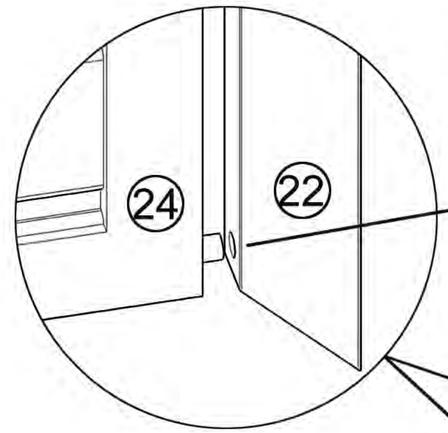

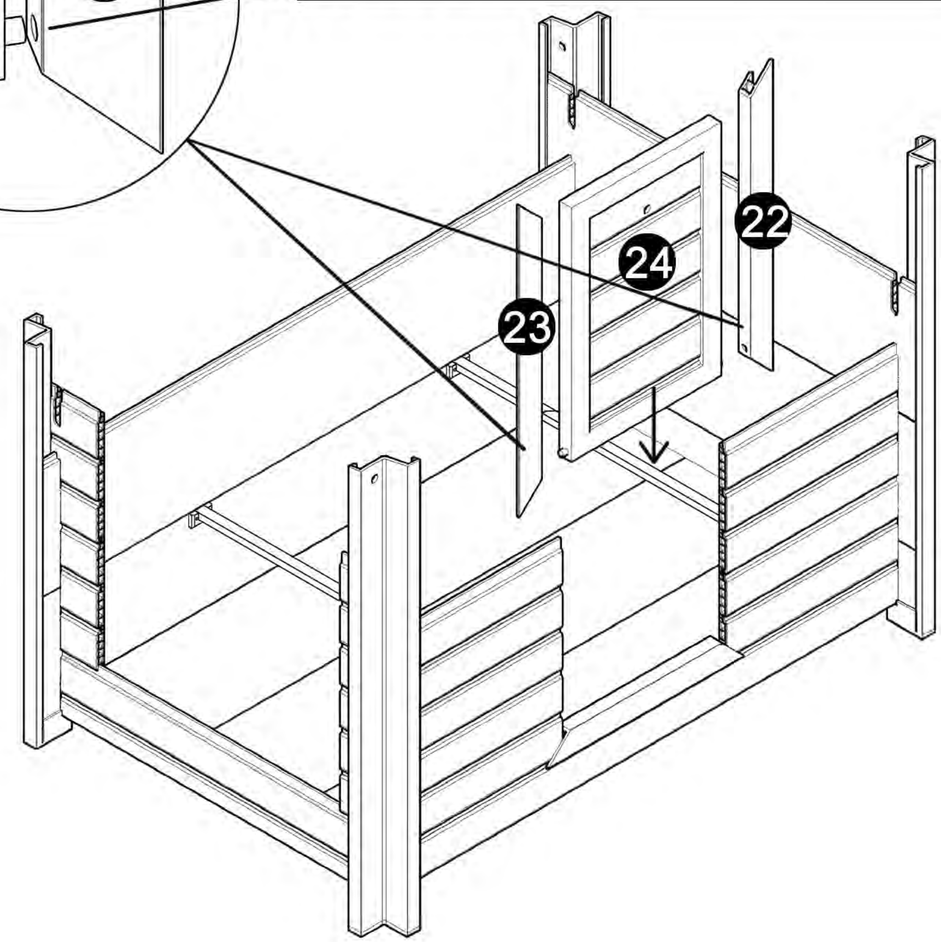

Step 18.

Attach door frame 25 to panel 26 in the same fashion as Step 16.

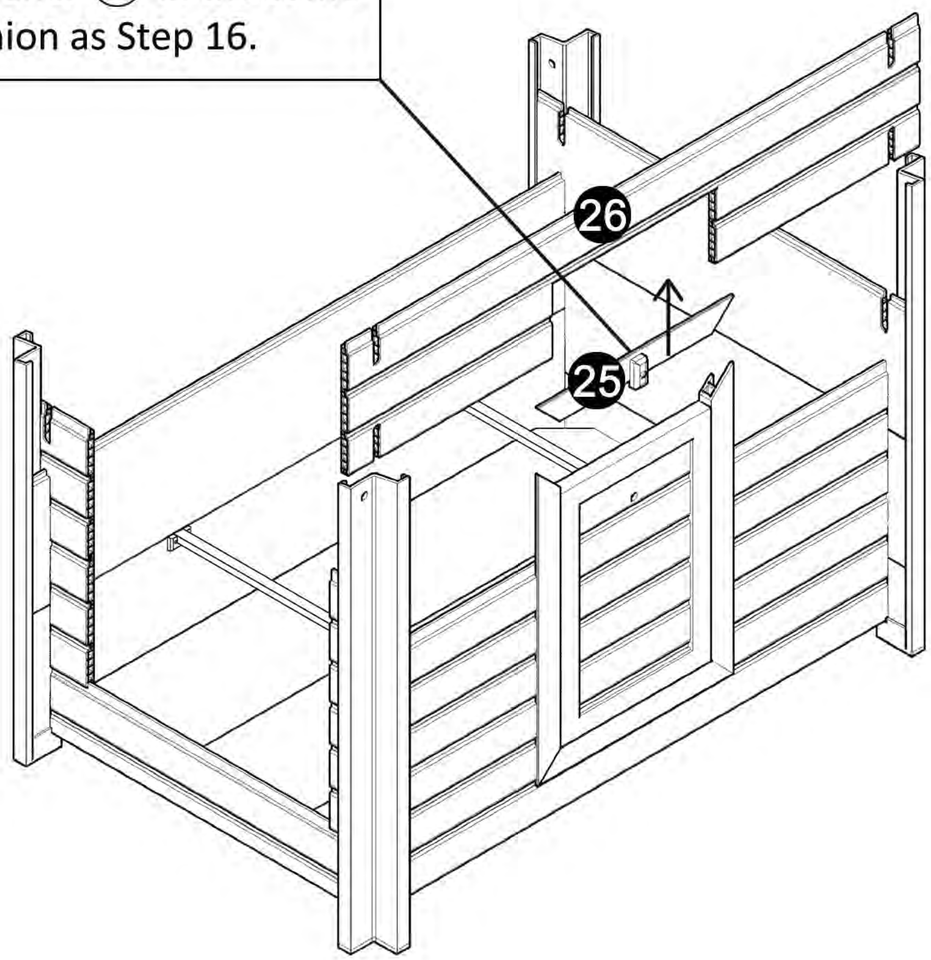

Step 19.

Hold door frame 25 and wall panel 26 together, insert wall panel 26 into place.

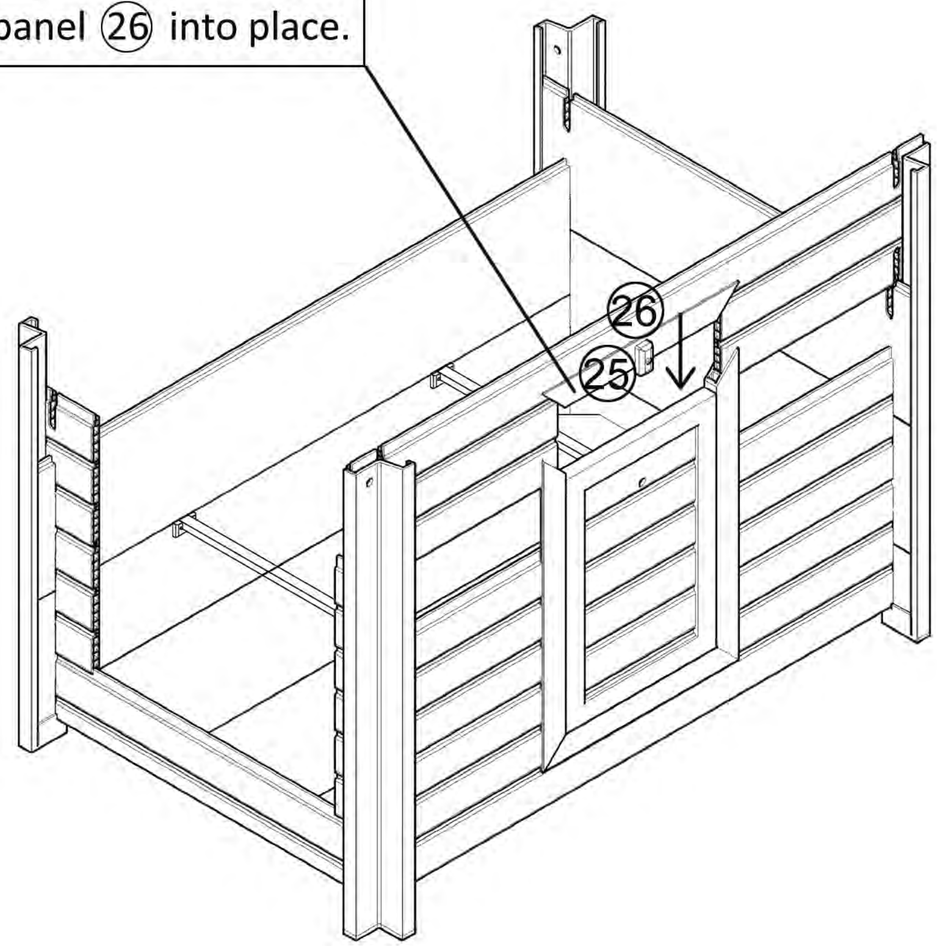

Step 20.

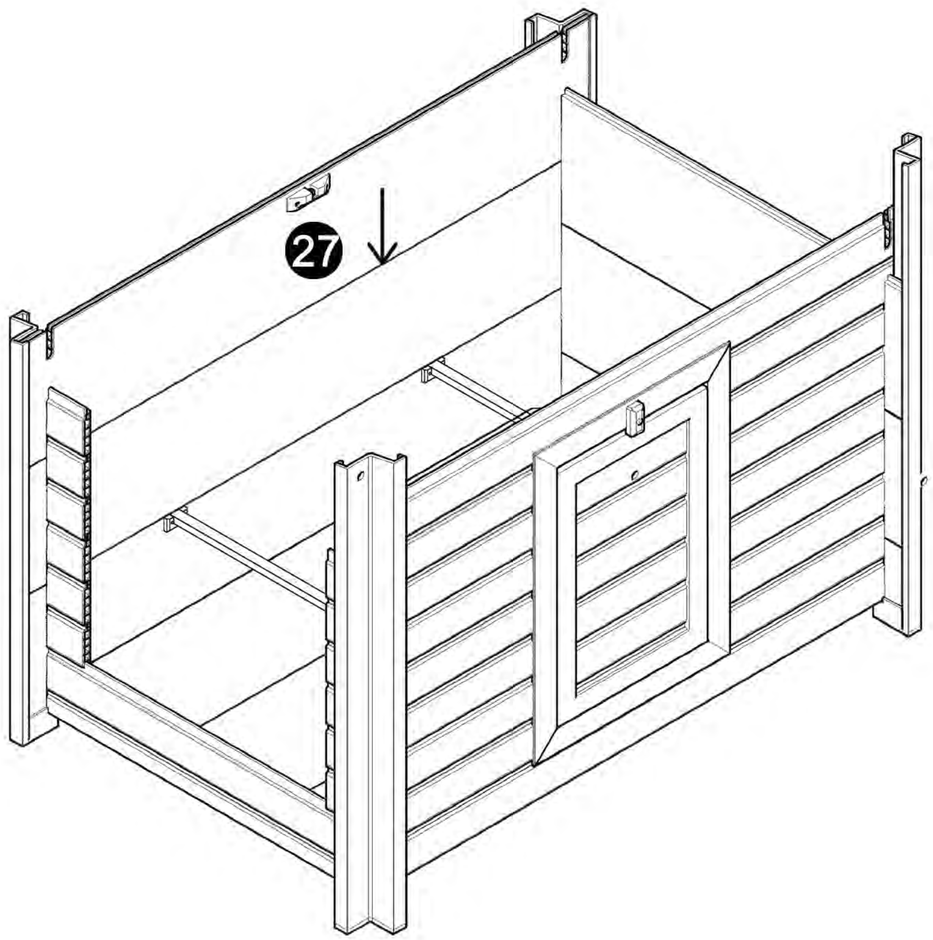

Step 21.

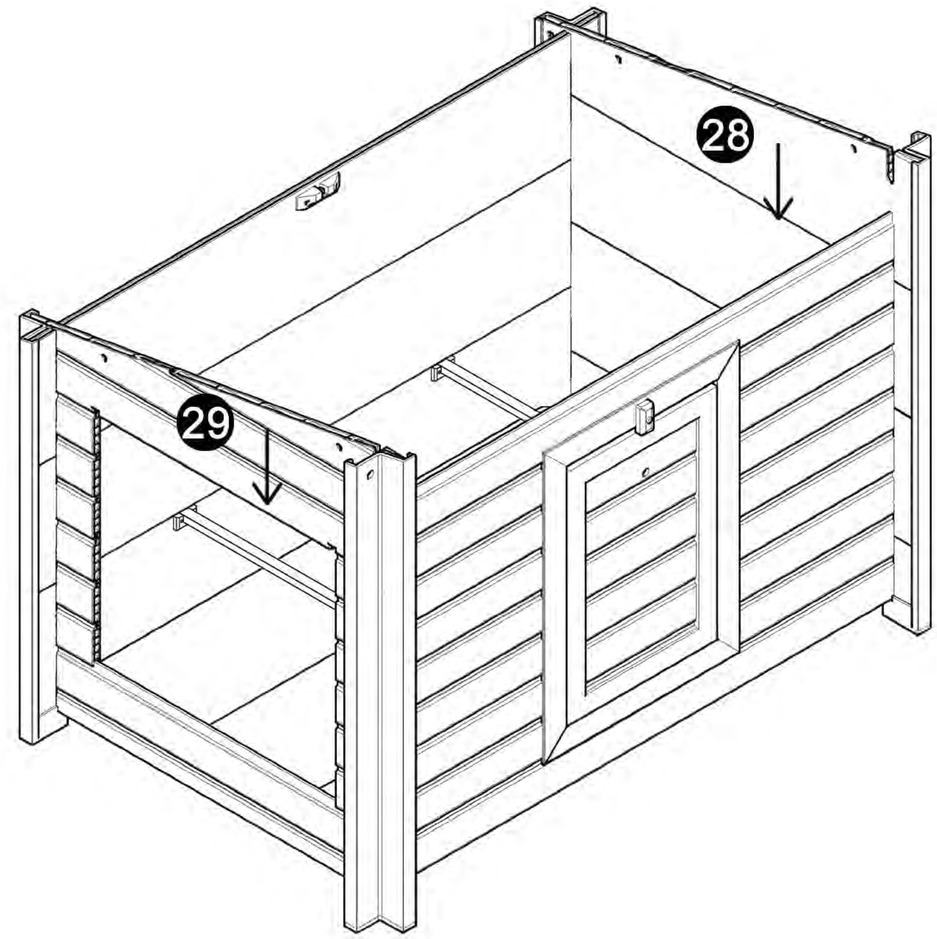

Step 22.

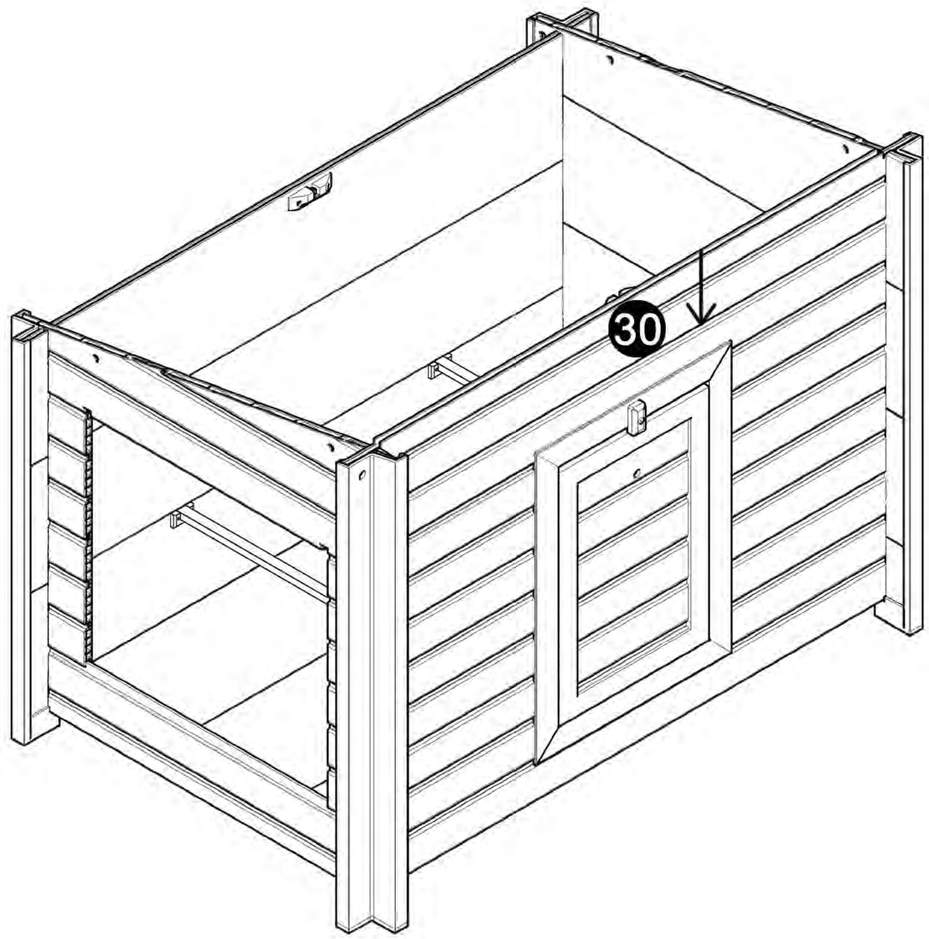

Step 23.

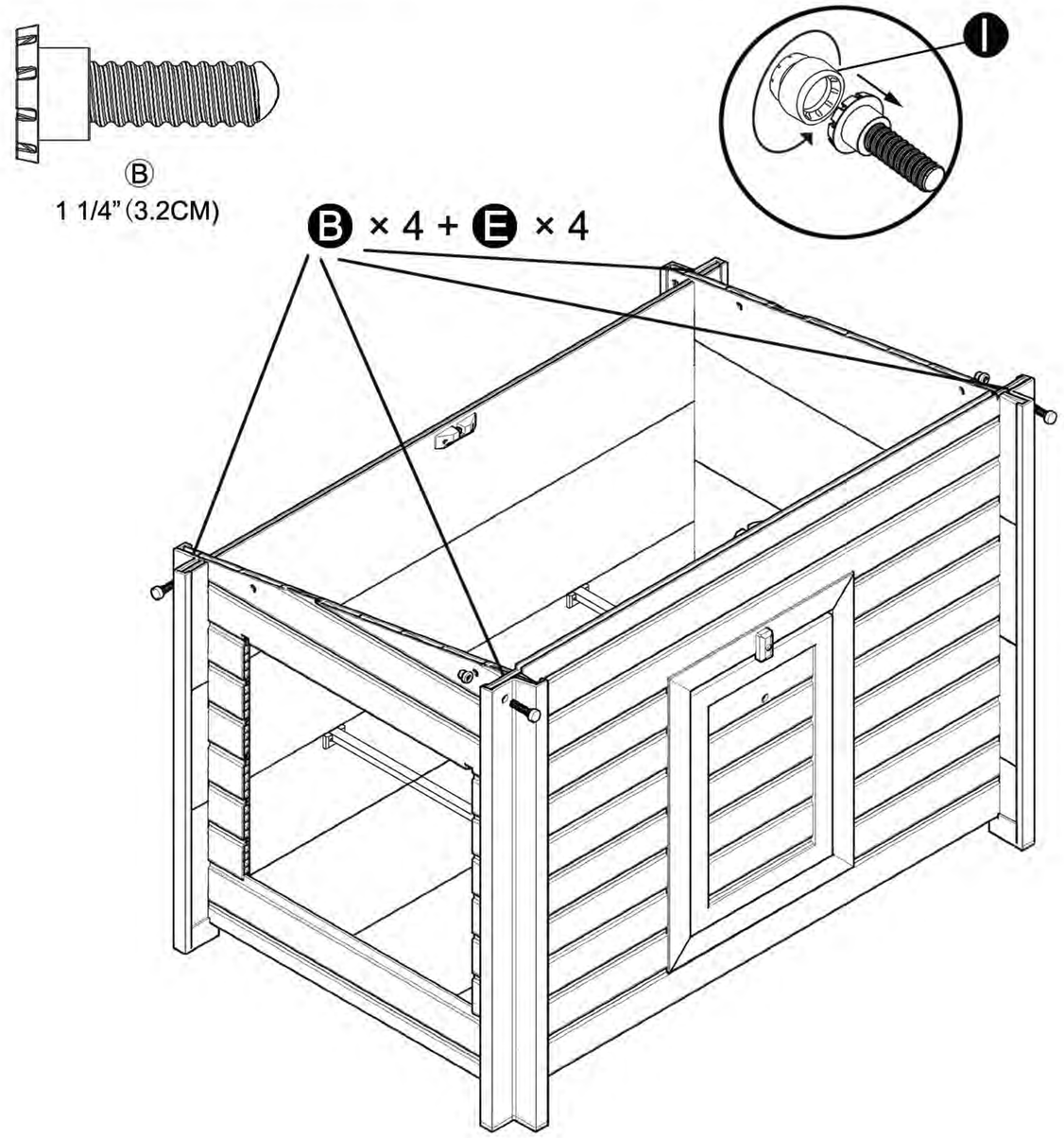

Step 24.

Parts ㉛ and ㉜ should be installed with the flange attaching to the inside of the wall panels.

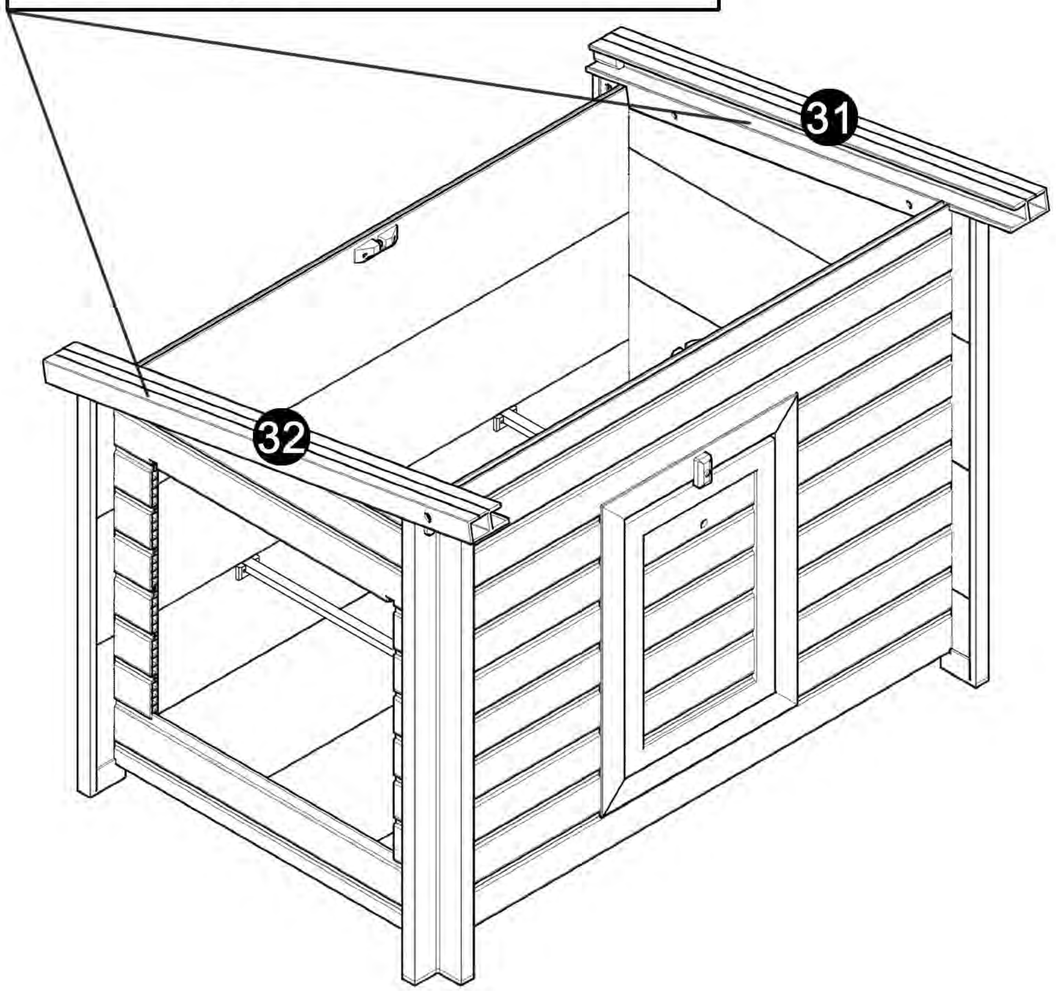

Step 25.

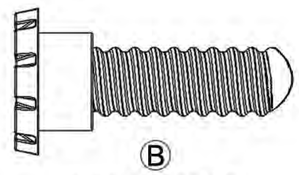

Ⓑ
1 1/4" (3.2CM)

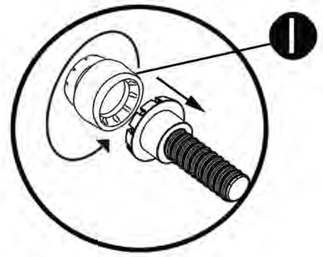

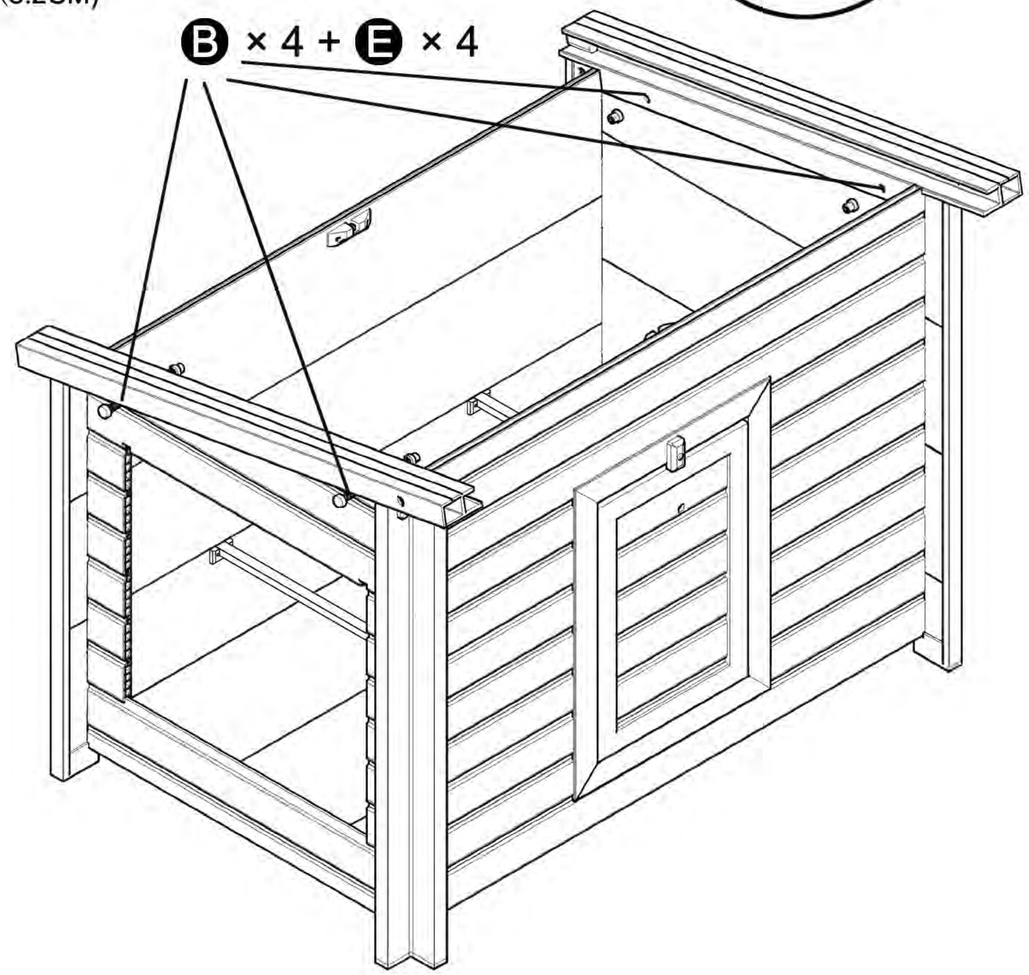

Step 26.

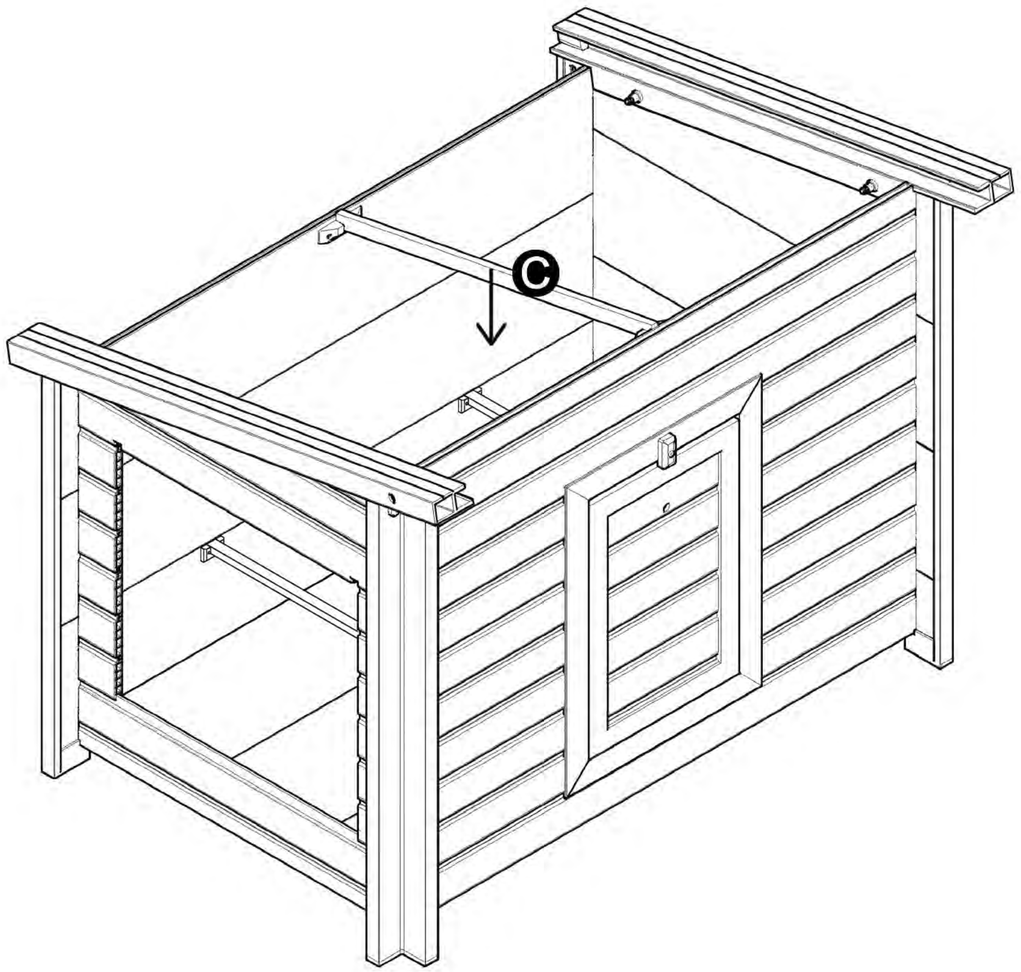

Step 27.

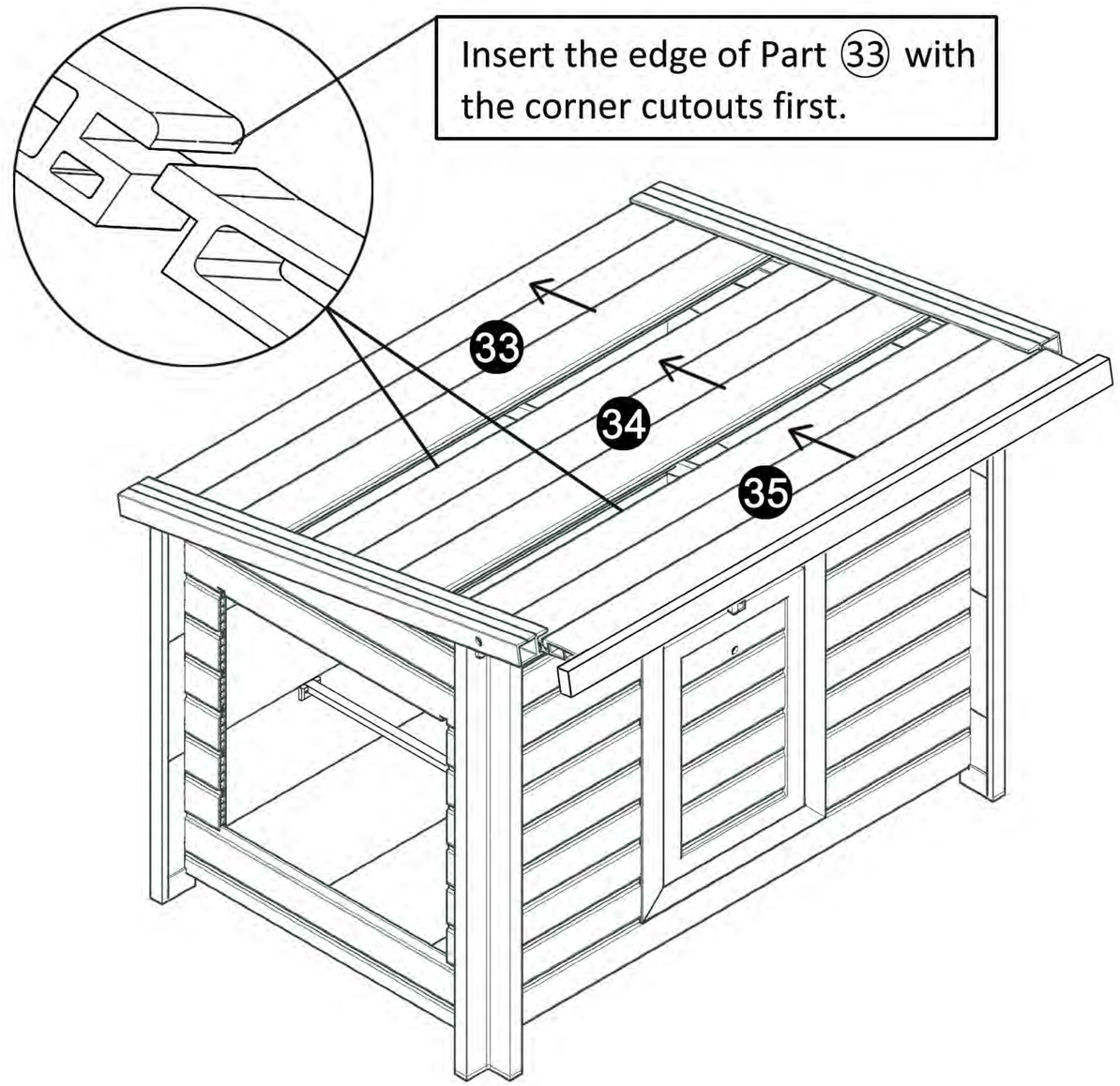

Step 28.

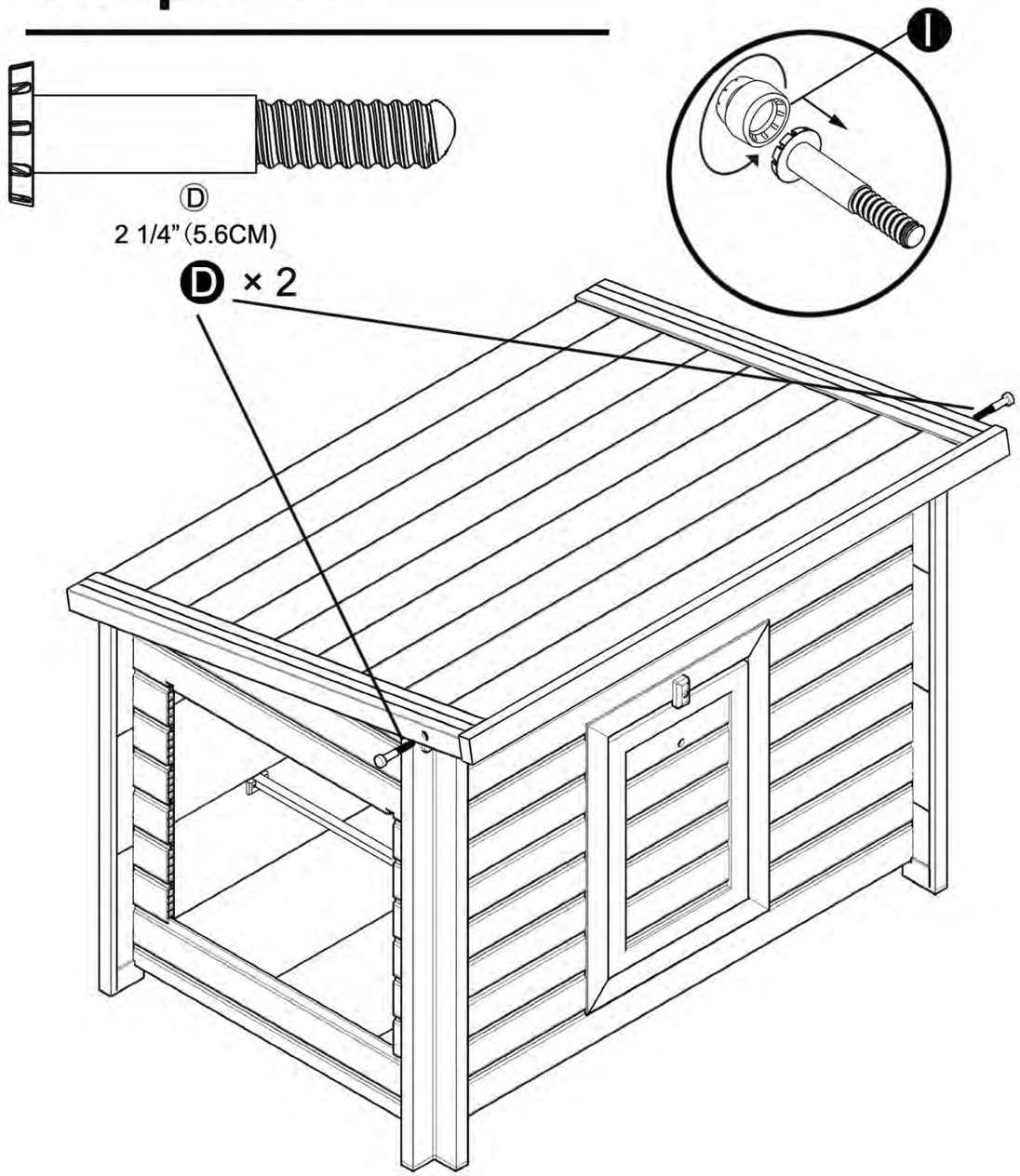

Step 29.

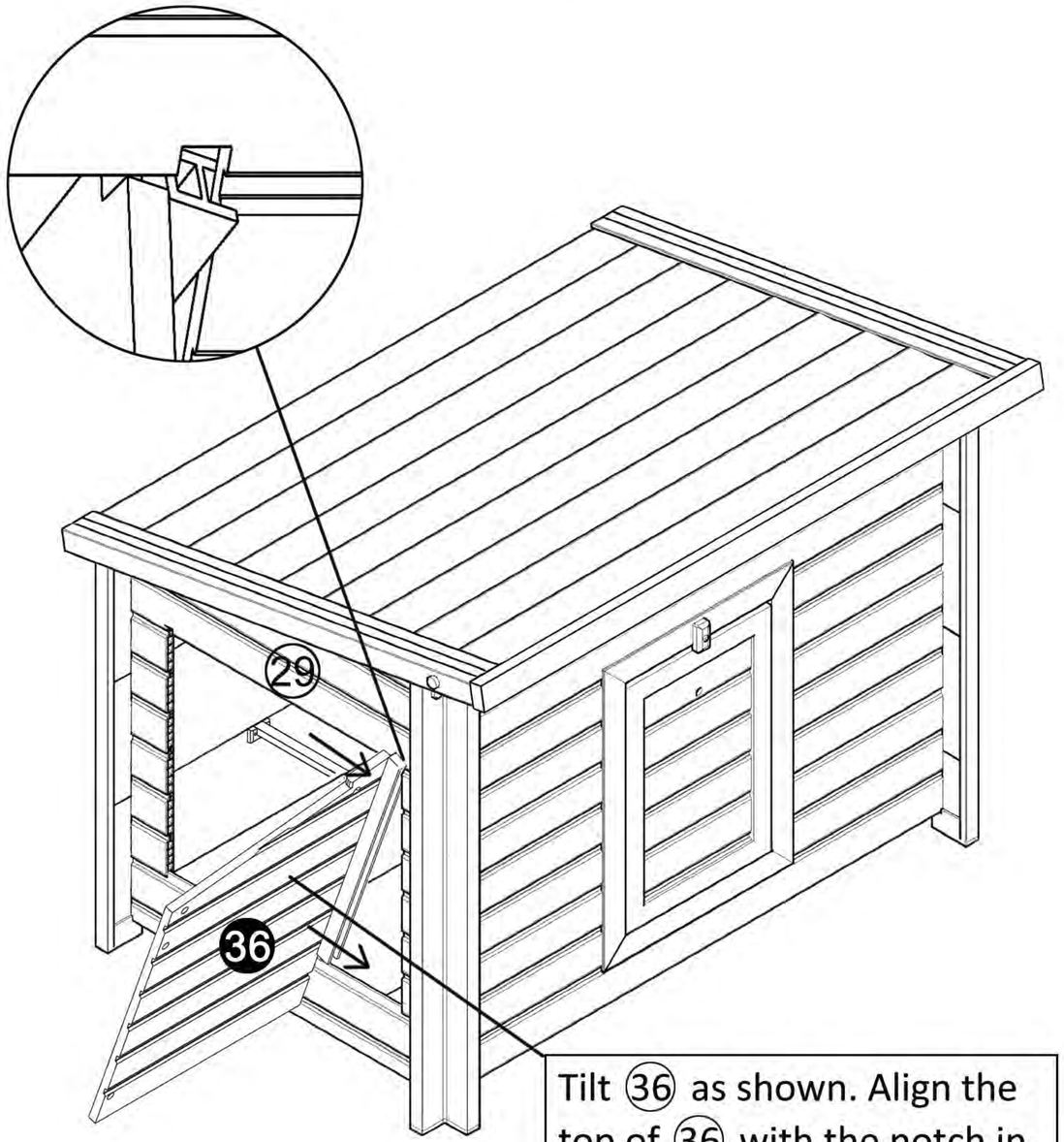

Tilt 36 as shown. Align the top of 36 with the notch in 29. Push to lower part of 36 sideways until vertical.

Step 30.

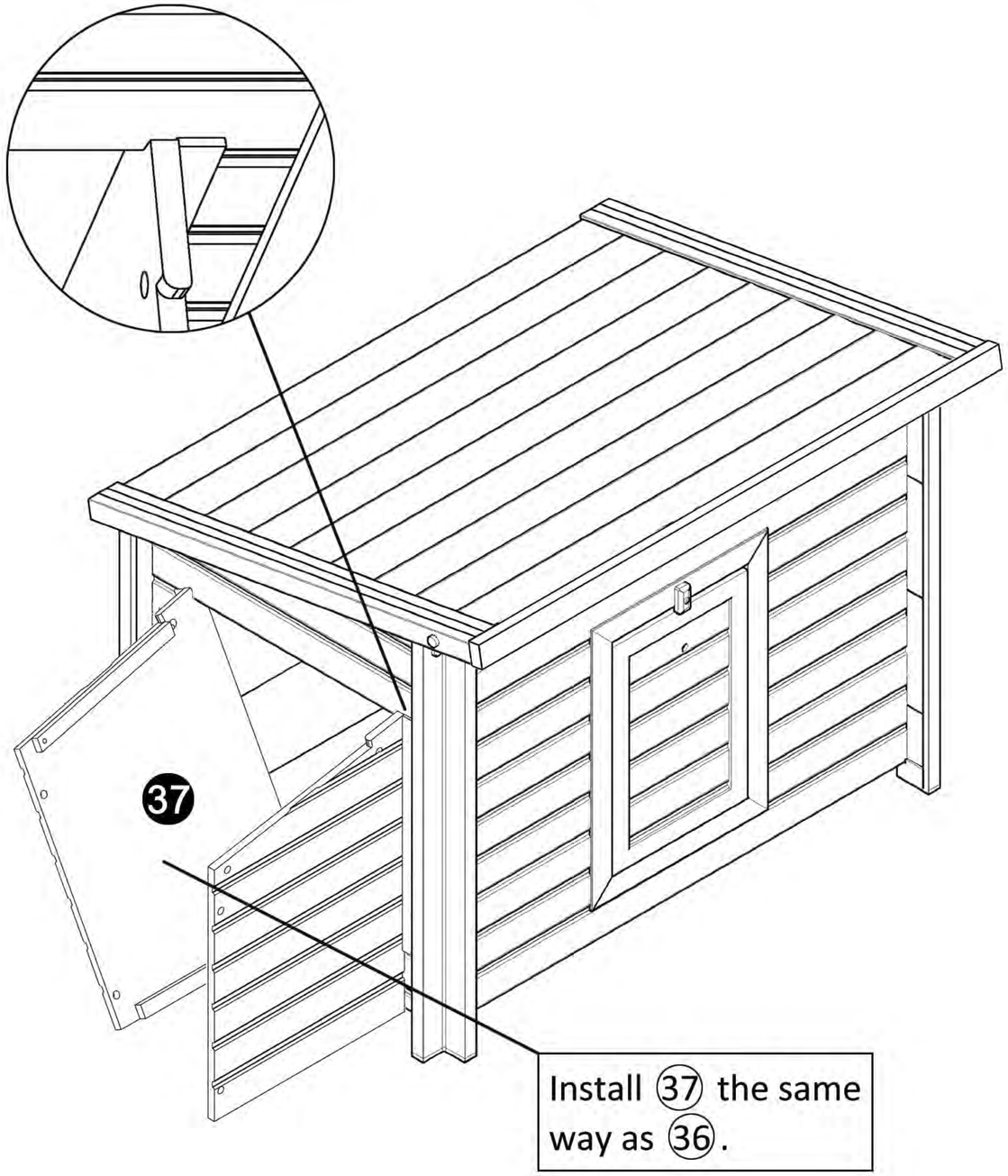

Step 31.

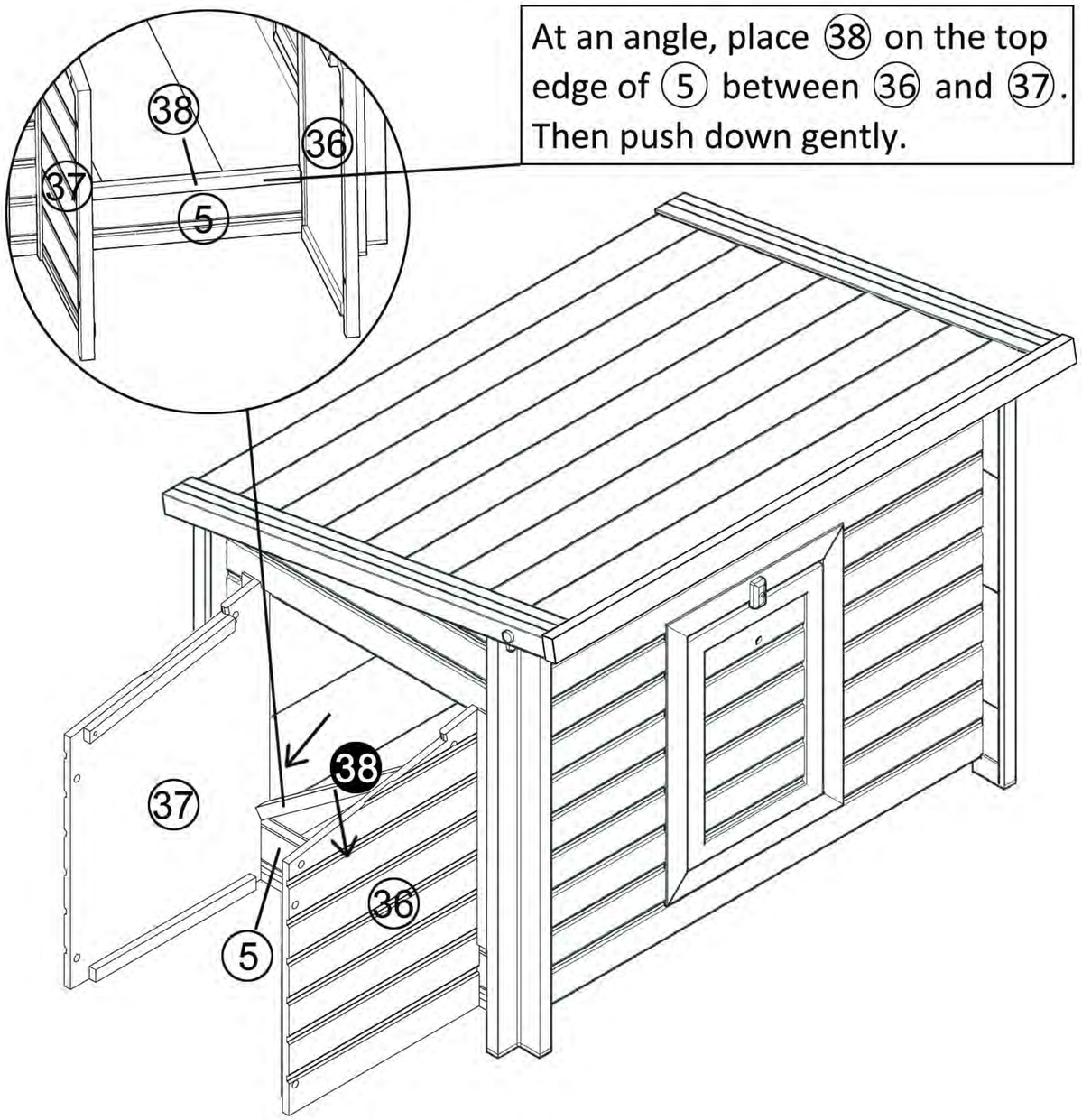

Step 32.

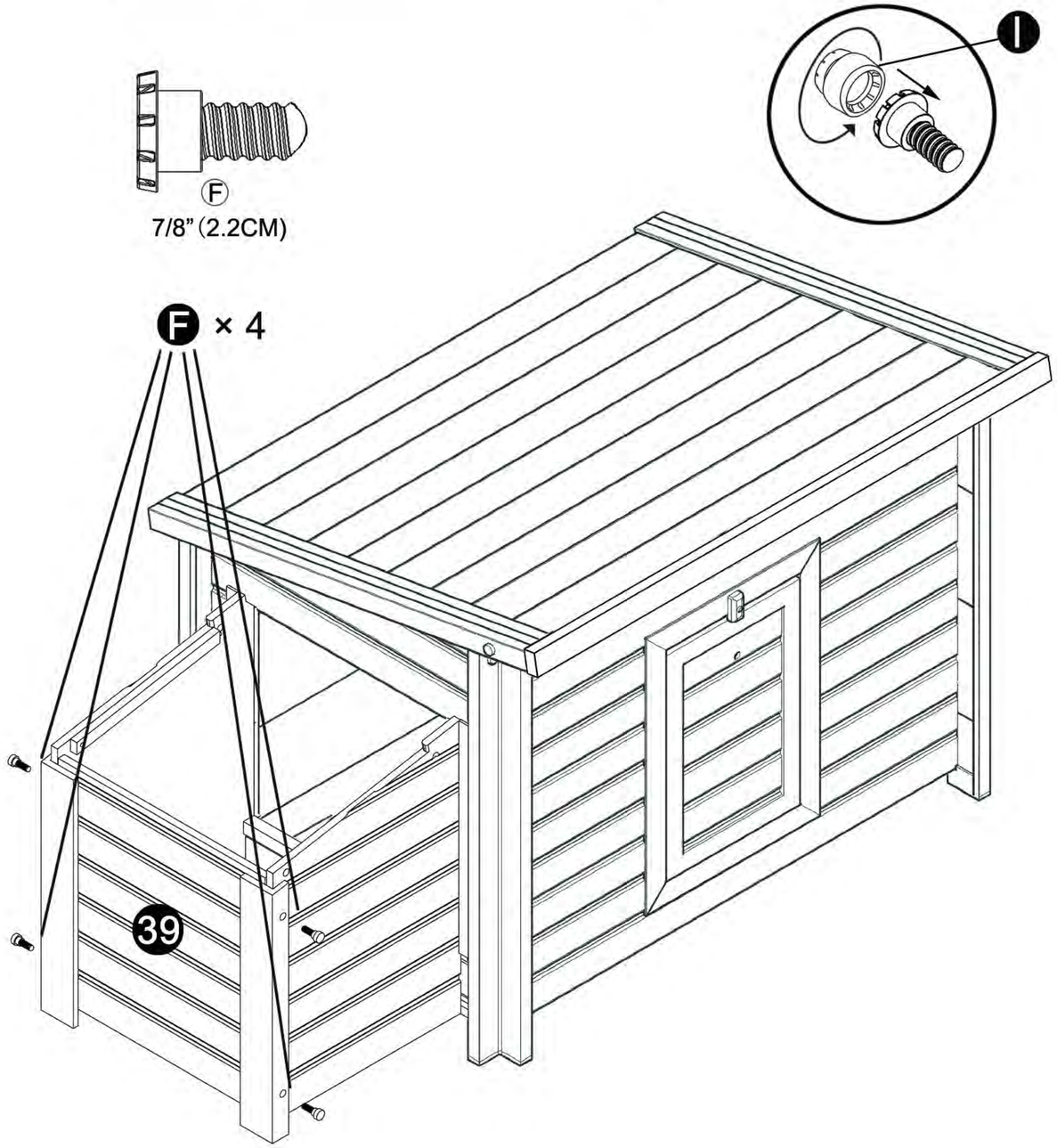

Step 33.

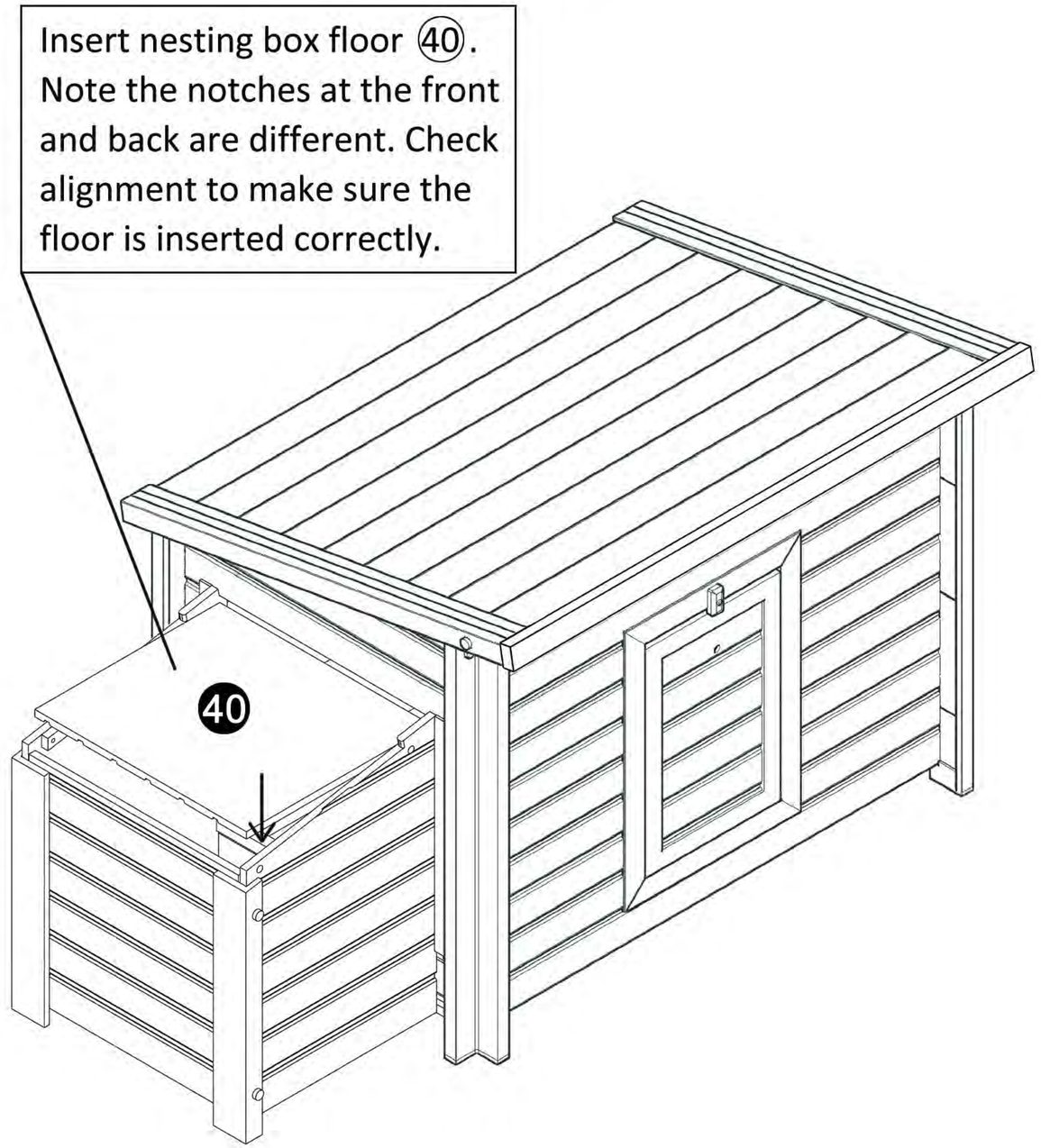

Step 34.

Locking Nesting Box (optional):

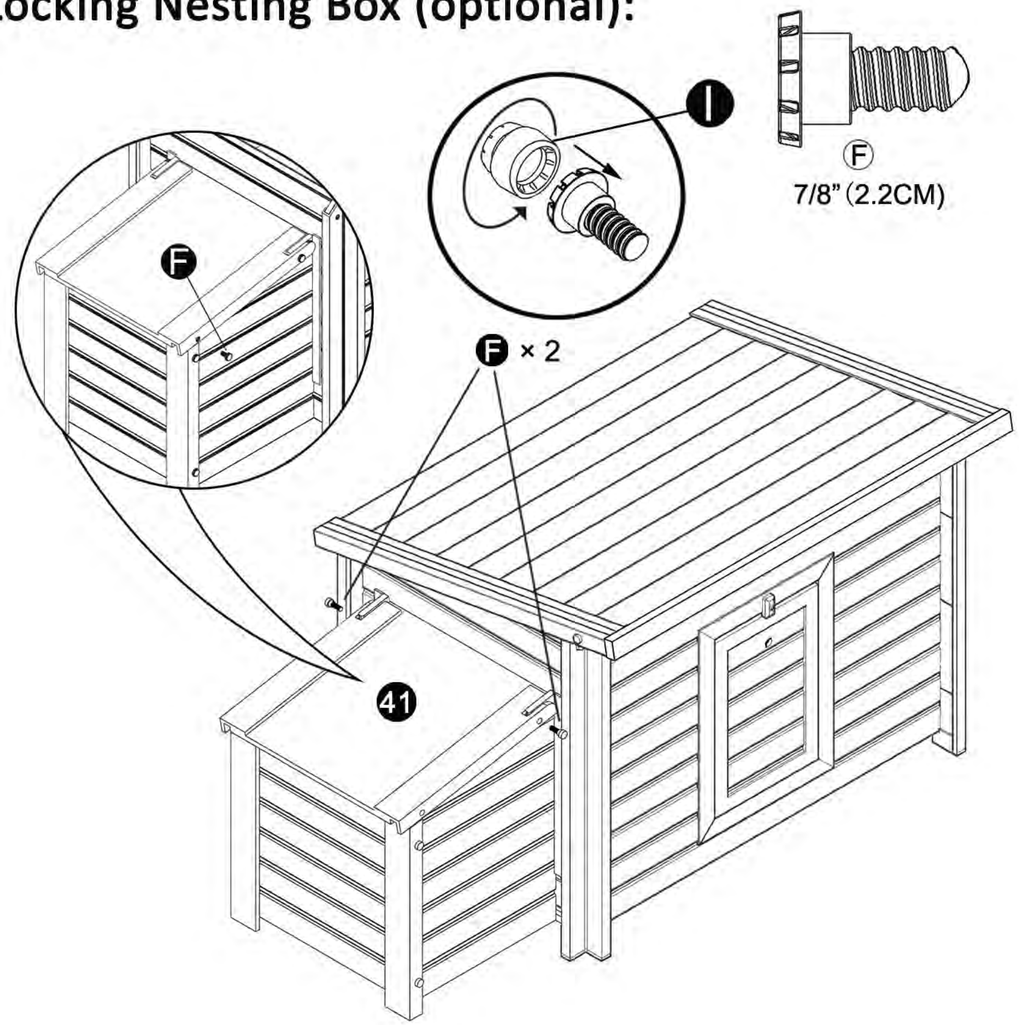

To lock the nesting box, insert the Ⓕ Thumb Screw into a hole on the side of the cover of the nesting box. Screw all the way in. Remove the Thumb Screw when to open and retrieve eggs.

Step 35.

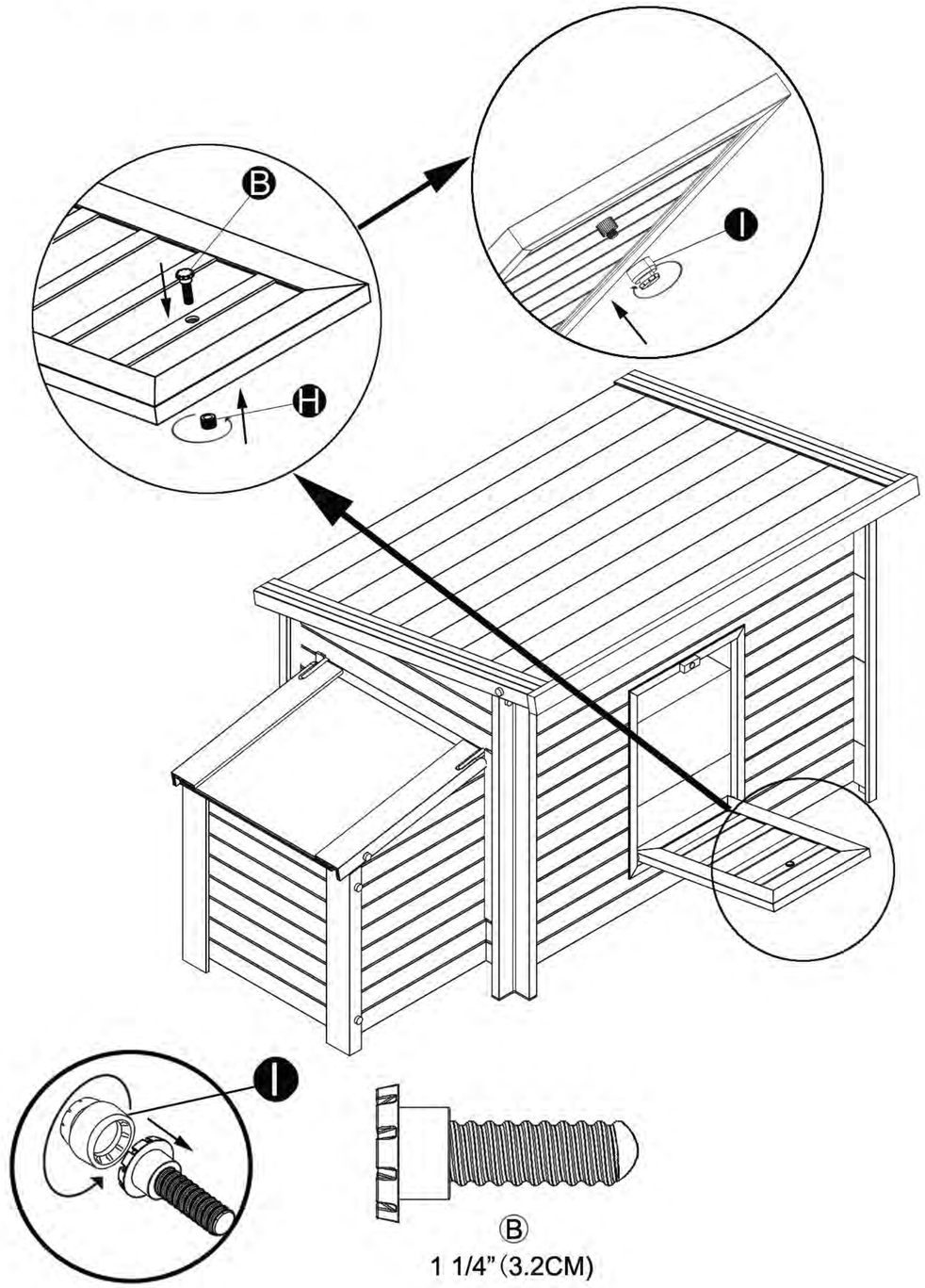

Complete

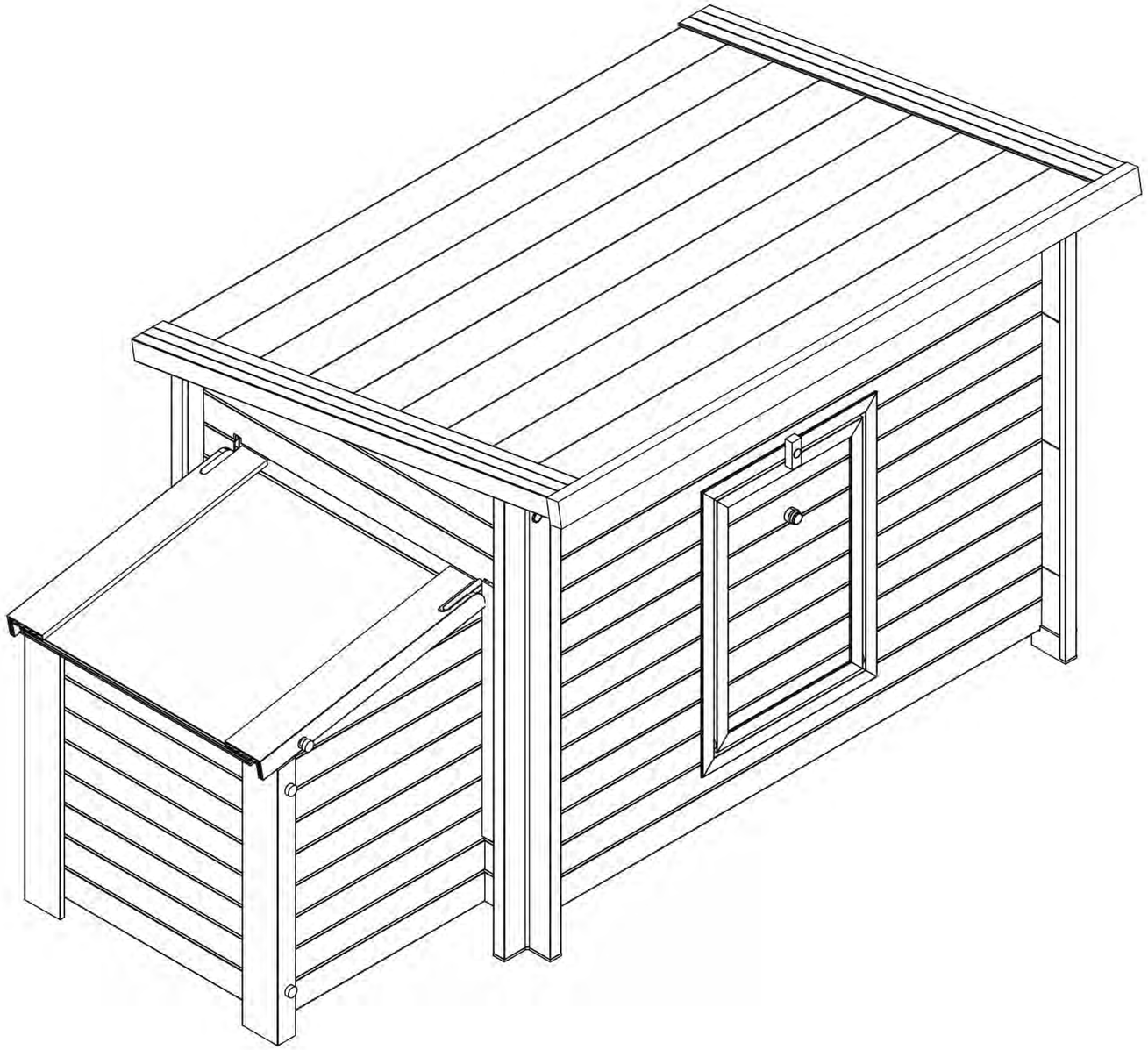

Cleaning Instructions

It is very important to keep the barn clean for healthy chickens. The Easy to Assemble design will be appreciated when it is time to clean.

Remove one or more roof panels by reversing step 28 and 27 of the assembly instruction. You now have access to the entire inside of the house.

We recommend using a detergent with strong grease cutting capabilities and safe to use around you, your kids and the chickens. After washing, rinse and then wipe down the panels. Don’t forget to clean the inside of the roof panels. Allow the interior to air dry thoroughly and reassemble.

Once the house is clean and dry, re-assemble the roof panels.