ASSEMBLY INSTRUCTIONS

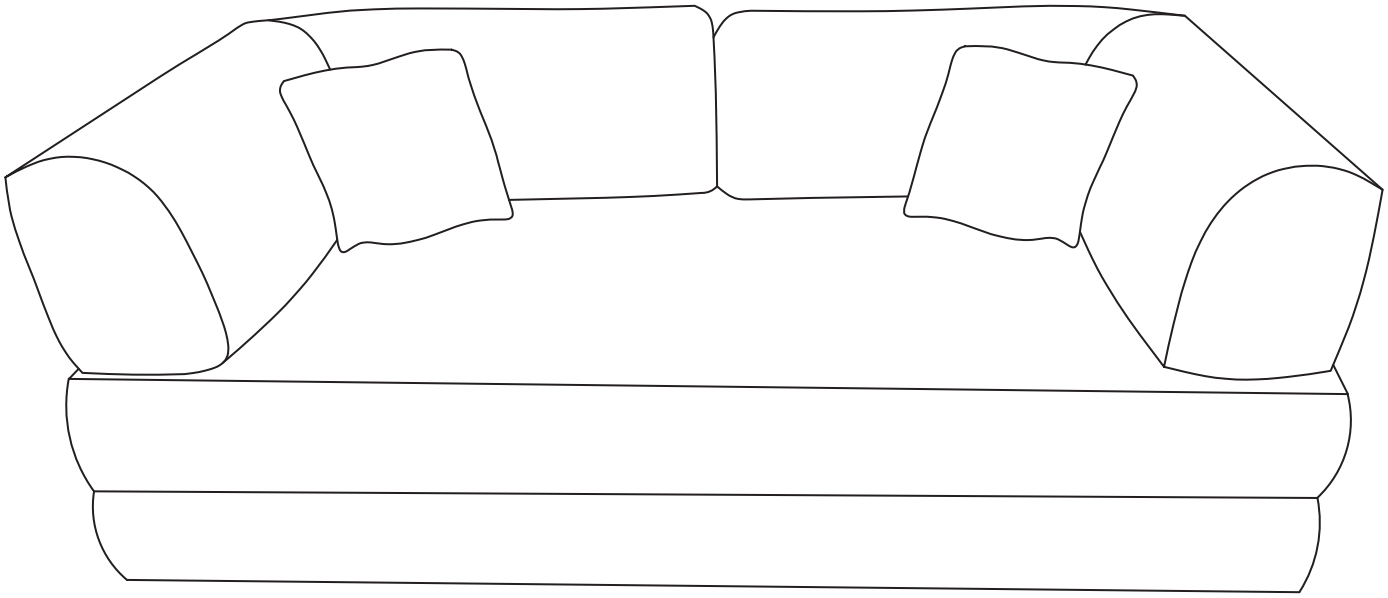

YZ2781

Sofa Bed

CAUTION

1.To ensure safe transit, this product is vacuum-sealed and compressed. It may take 3 to 5 days to fully expand to its original shape.
2.When cleaning, use a soft, damp cloth to gently wipe the surface. You may also use specialized upholstery cleaners. Avoid harsh chemicals or abrasive cleaning agents.
3.Do not exceed the maximum weight capacity. Overloading the product may cause structural damage or lead to personal injury.
4.WARNING: Never leave infants or small children unattended on this product. This may pose a suffocation hazard.
5.The actual product may vary slightly from the illustrations shown.
6.Plastic bags can be dangerous. To avoid danger of suffocation, keep all plastic packaging away from babies and children. Dispose of packaging immediately after opening; do not reuse.

RETURN POLICY

We understand returning vacuum-compressed items can be challenging. Please note that once the product has been unpacked and allowed to expand, it cannot be re-compressed for return shipping.If you encounter any issues or are unsatisfied with your purchase, please contact us via your Amazon Order page. Our support team is ready to assist you with resolutions or return instructions.

Step 1

Remove the product from the carton.

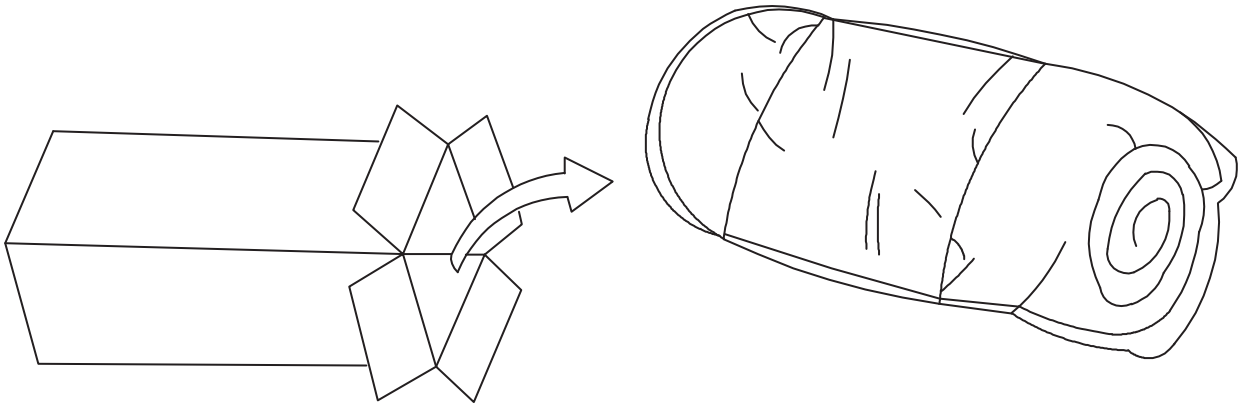

Step 2

Gently cut open the compression bag and remove the vacuum-sealed product.
CAUTION: Do not use sharp tools to open the packaging, as this may damage the fabric.

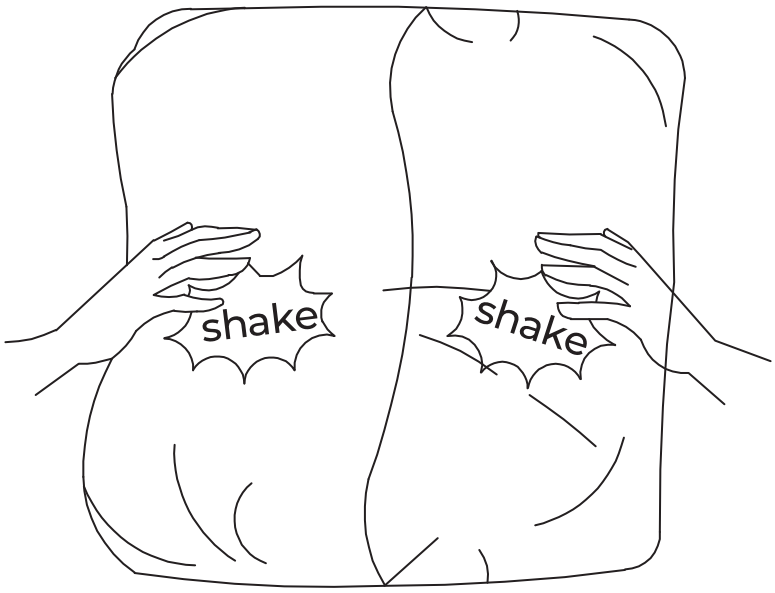

Step 3

Check the parts list.

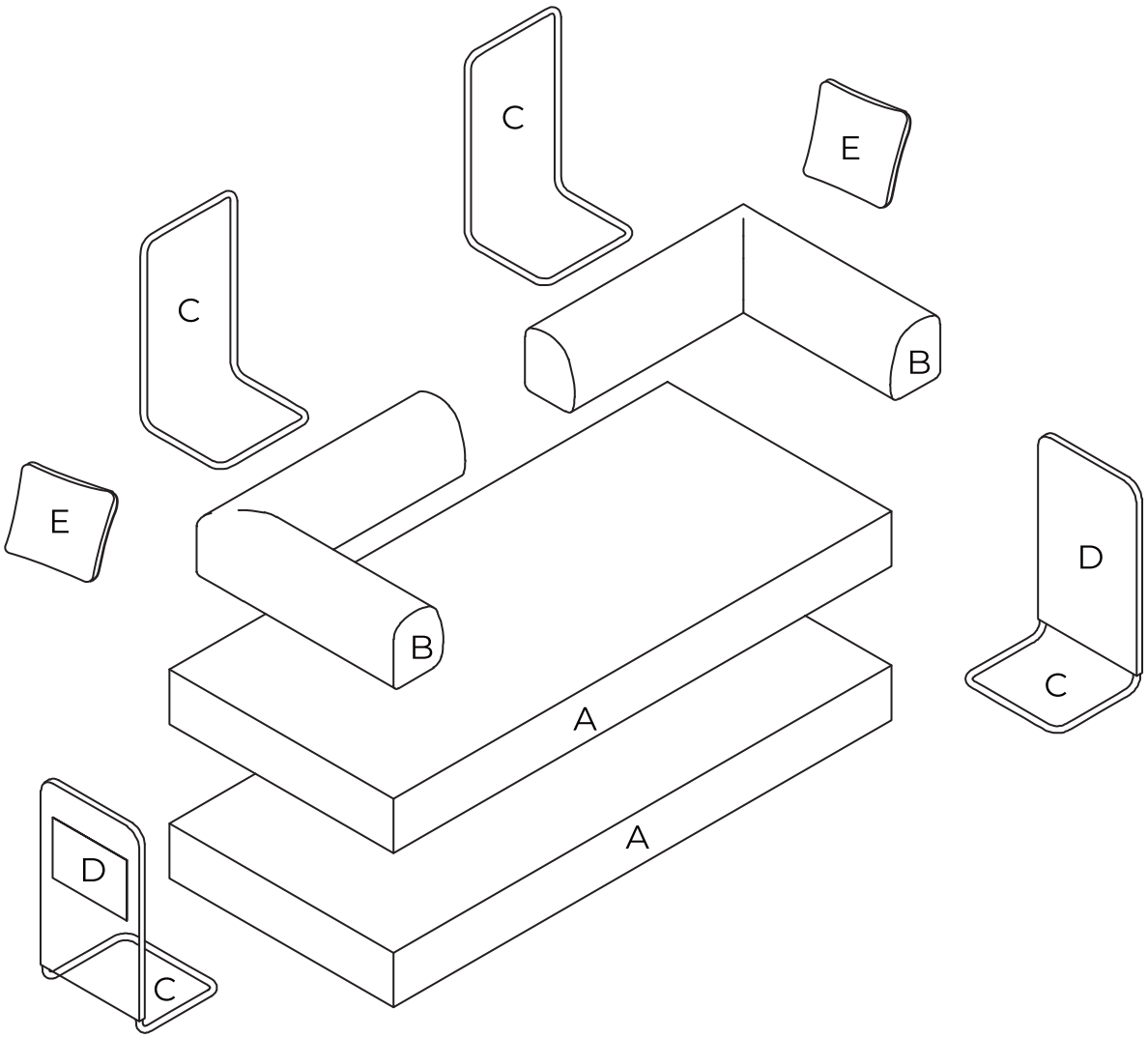

A.Seat Cushion*2 B.Left and Right Cushions

C.Iron Frame*4 D.Cloth Bag*2 E.Pillow*2

Step 4

Fit the cloth bag over the iron frame.

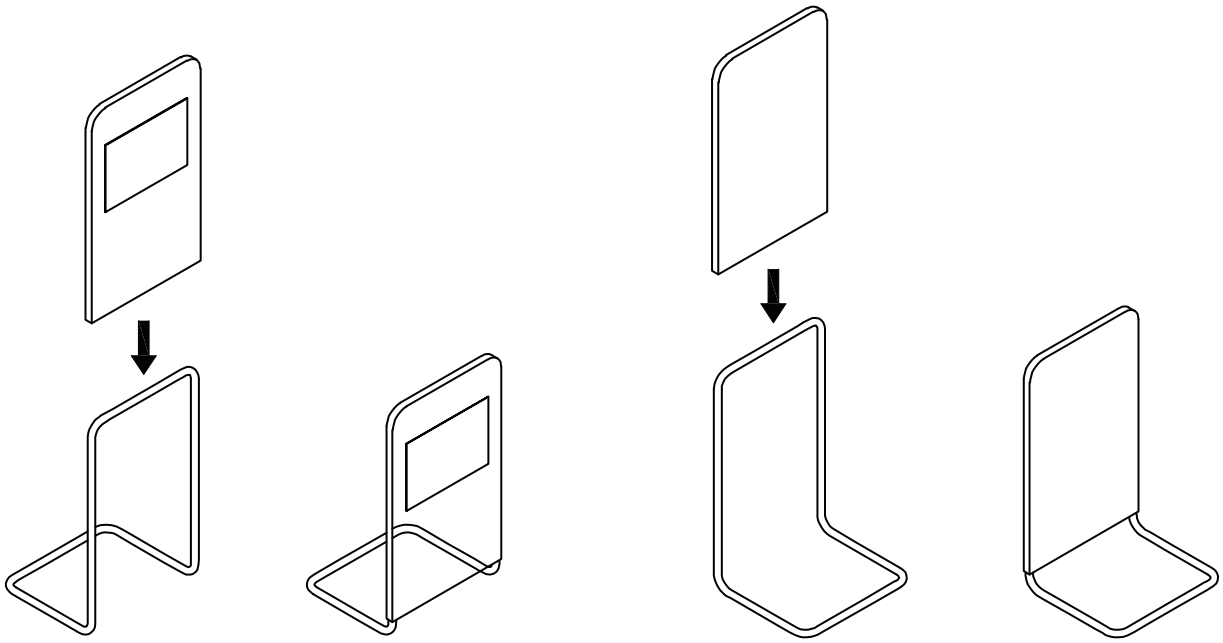

Exterior Elevation

Interior Elevation

Step 5

Stack the two seat cushions together.

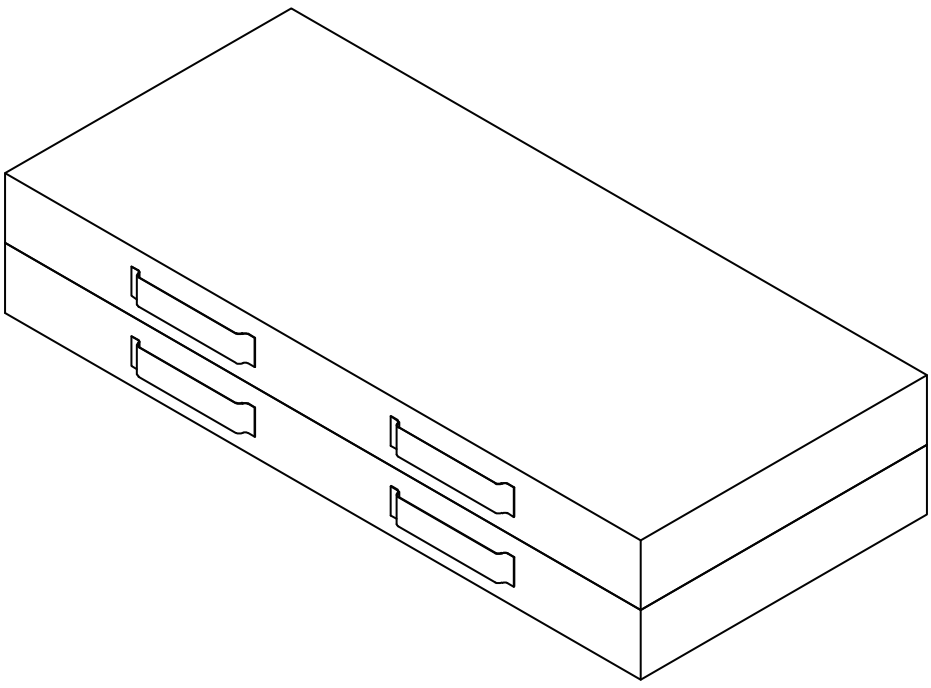

Step 6

Insert the two metal frames from bottom to top through the securing straps at the rear of the two seat cushions and fasten them in place.

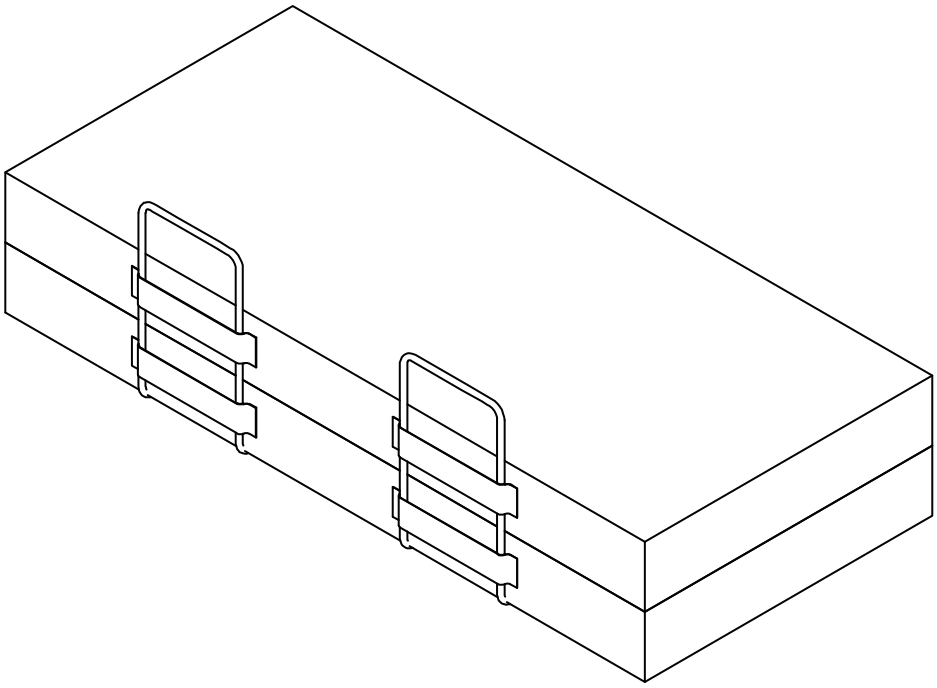

Step 7

Stack the left and right back cushions on top of the seat cushion.

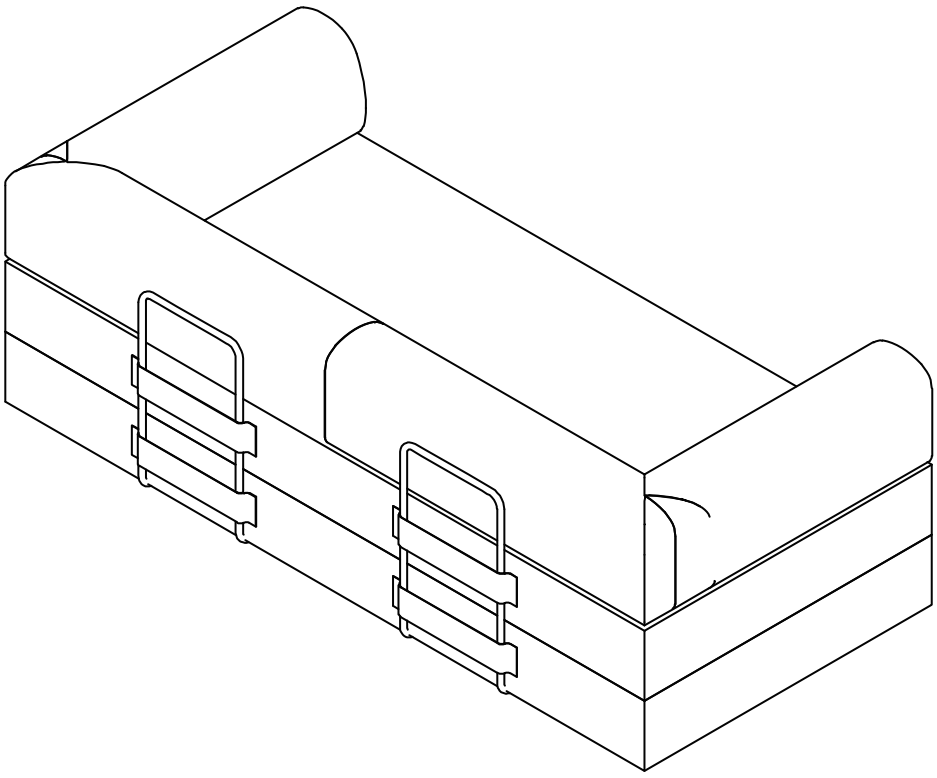

Step 8

Bring the other two iron frames toward the center from the left and right sides and secure them in place.

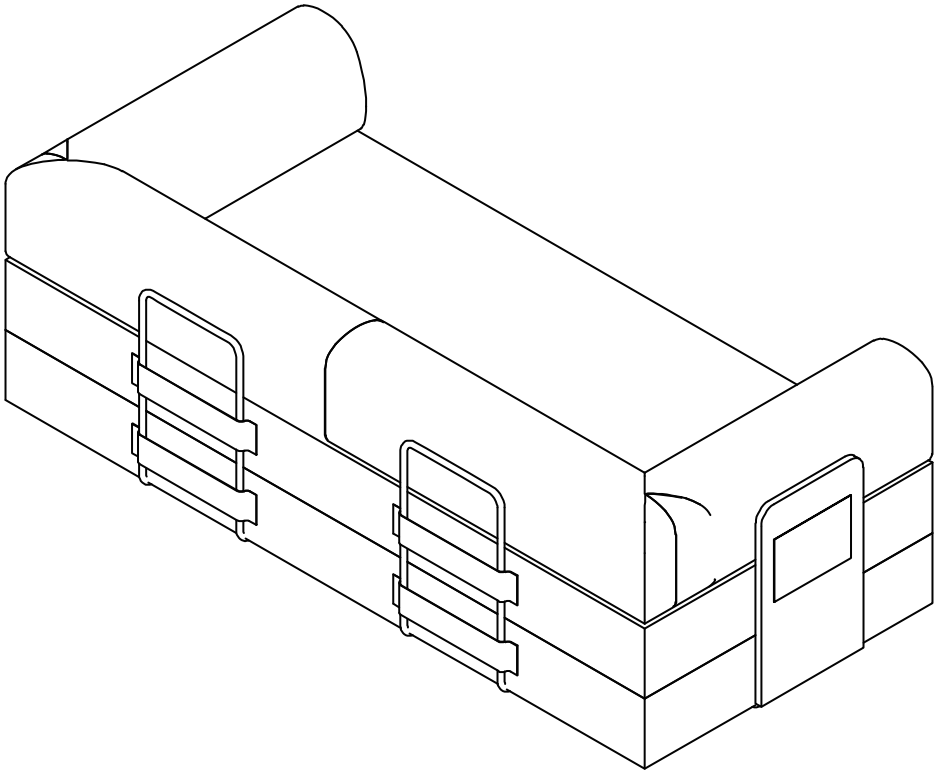

CUSTOMER SERVICE

Thank you for your purchase!If you have any questions or concerns regarding your order, please feel free to contact us.

Information Required for Support:

1.Order Number
2.Description of the issue
3.Supporting photos or videos (if applicable)
Our customer support team will respond promptly to ensure a smooth and hassle-free experience.

FAQ

Q: How long does it take for the product to fully expand after unpacking?
A: This product is vacuum-compressed for shipping; please allow 3–5 days for it to fully expand to its original shape.

Q: How do I remove wrinkles from the product?
A: To remove wrinkles, you may use a garment steamer or an iron on a low-heat setting.
CAUTION: Use only low or medium heat. Do not leave the iron in direct contact with the fabric for an extended period, as this may cause damage.

Always test a small, inconspicuous area first if you are unsure.

Q: Does the product color match the online images exactly?
A: Slight color variations may occur due to monitor settings, lighting conditions, and different production batches.