60″ DOUBLE SINK BASE CABINET

BASE CABINET DIMENSIONS

60″ W x 21.5″ D x 33.5″ H

FEATURES

- Solid wood frame & plywood panels
- Dovetail drawers and joints
- Soft closing doors & drawers

HARDWARE FINISHES*

Brushed Nickel | Satin Brass | Matte Black | Polished Chrome

Hardware comes preinstalled with the illustrated option.
Other finishes are available on our online store if you prefer a different one.

AVAILABLE COLORS

White | Grey

FRONT VIEW

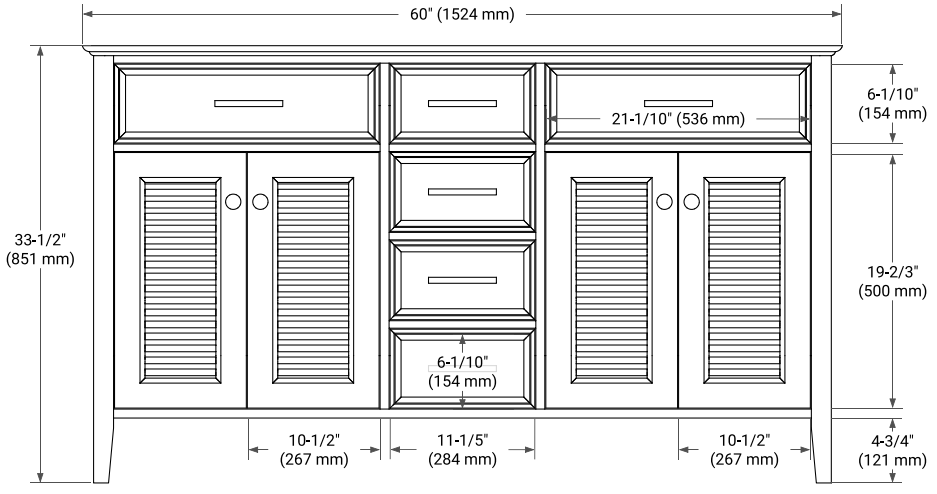

SIDE VIEW

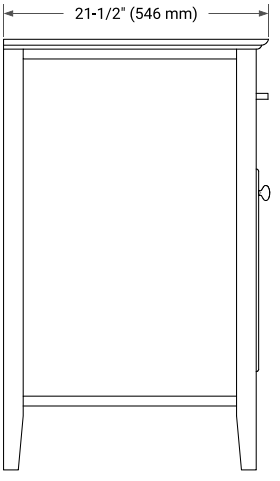
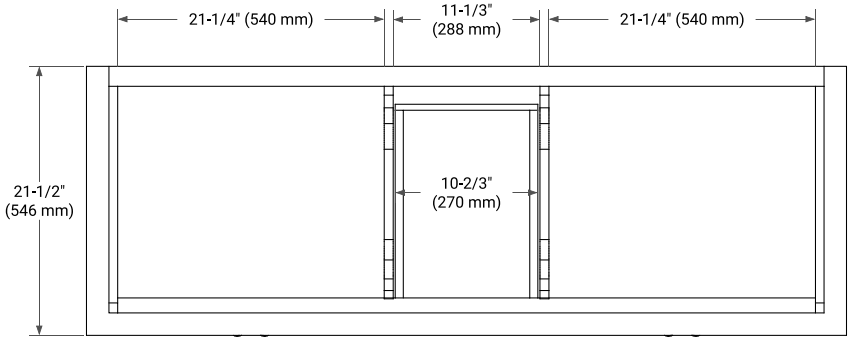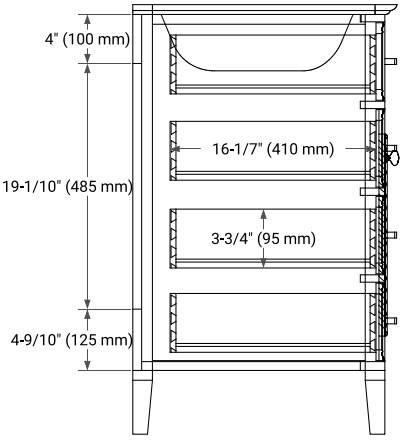
PLAN VIEW