CLASSIC TOWEL BAR

TBMB2, TBBN2, TBPC2, TBBB2, TBPC2A, TBBN2A, TBMB2A, TBBB2A

luca + lex

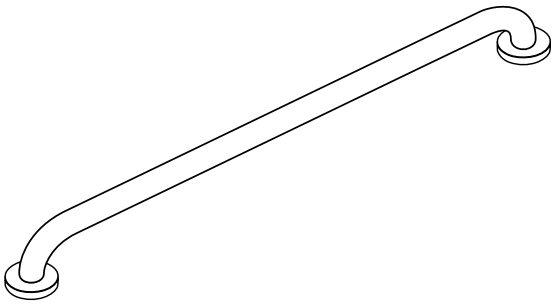

INCLUDED HARDWARE

Wall Anchors, Screws
Allen Wrench, Set Screw

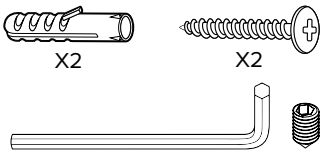

TOOLS YOU MAY NEED:

Phillips head screwdriver, Hammer
Pencil, Level, Tape Measure, Drill

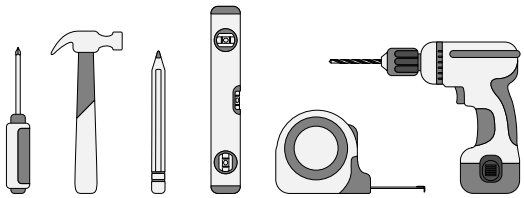

STEP 1:

- Locate hanging hardware before discarding any packaging.

STEP 2:

- Determine installation location. **CAUTION:** Do not install where the product might be used as a grab or support bar.
- For best results, always install towel bar into at least one wall stud. If two studs are not available, install the side not aligned with a stud using a wall anchor.
- Measure & level the bar in desired location.

STEP 3:

- Make sure the wall mount bracket screw holes are visible.
- Mark the anchor and/or screw placement using a pencil through the wall mount brackets.

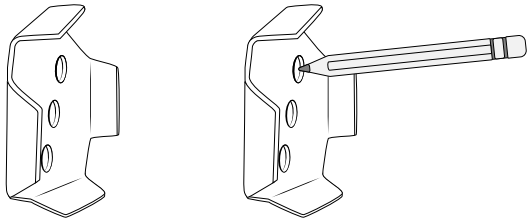

STEP 4:

SOLID WOOD OR STUD MOUNT:

- Fasten screws through wall mount bracket at marked points.

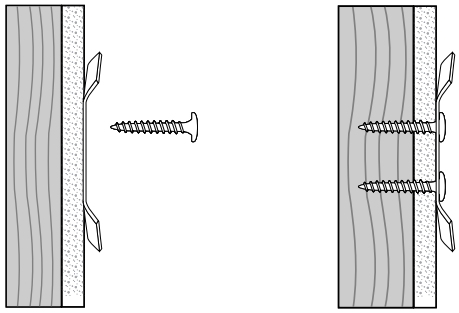

STEP 4:

DRYWALL MOUNT:

- Drill pilot holes and insert plastic anchors into drilled holes using a hammer to tap the anchors flush with the wall. Be careful when tapping not to damage the anchor or surrounding wall.
- Position wall mount brackets over installed anchors.
- Fasten screws through the wall mount bracket into anchors.
- Repeat this process for both mounting brackets, carefully measuring and leveling each side.

Make sure to follow these steps for all holes in the wall mount bracket for secure installation.

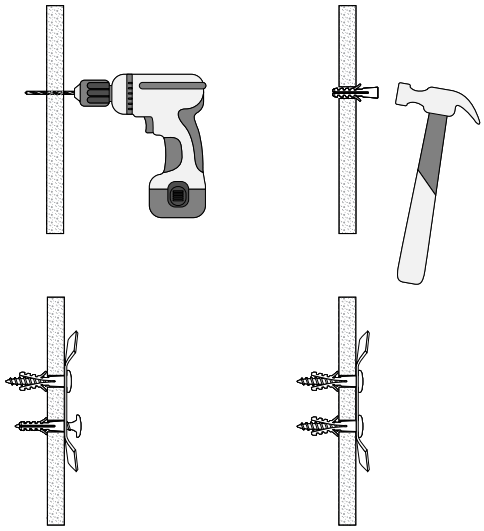

STEP 5:

- Fasten towel bar over wall mount brackets.
- Tighten set screws at the bottom with allen wrench.

