ZEPHYR

ZEPHYRONLINE.COM

	INTERNAL BLOWER STANDARD	INTERNAL BLOWER with ACT™ AIRFLOW CONTROL TECHNOLOGY™*		
Min. - Max. CFM	200 - 700	200 - 590	200 - 390	200 - 290
Min. - Max. Sones	0.8 - 6			

*AIRFLOW CONTROL TECHNOLOGY™ (ACT™) is an exclusive feature built into specific Zephyr hoods which can limit the maximum blower CFM to meet local code requirements.



ACT™ PowerWave™

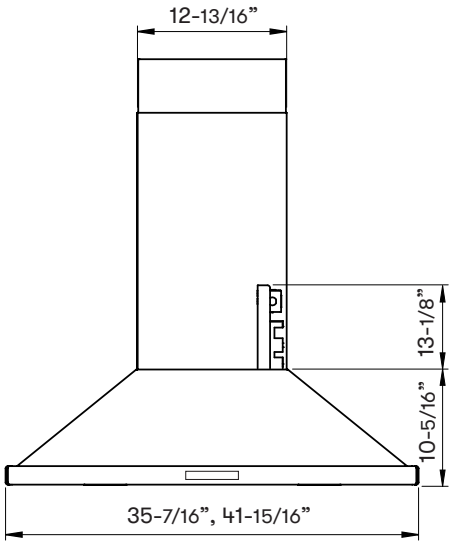

FRONT

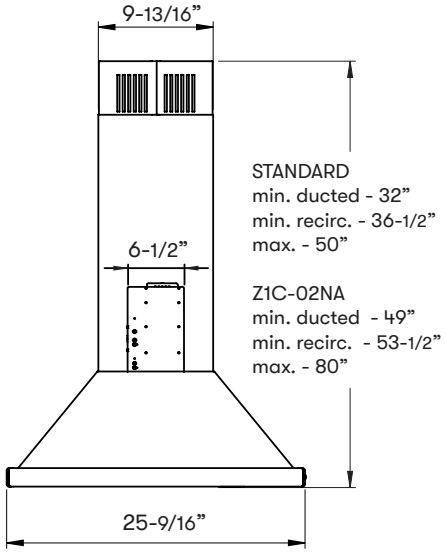

SIDE

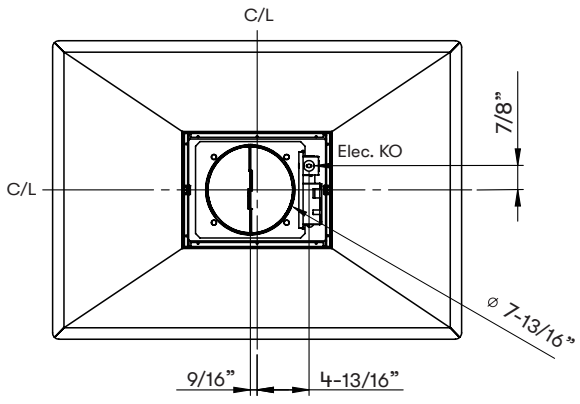

TOP

ZEPHYR

ZEPHYRONLINE.COM

MODEL		
Stainless Steel	ZNA-M90DS	ZNA-E42DS
Size	36”	42”
BLOWER PERFORMANCE		
Blower CFM (Min. - Max.)	200 - 700	200 - 700
Sones (Min. - Max.)	0.8 - 6	0.8 - 6
ACT 590 CFM (Min. - Max.)	200 - 590	200 - 590
ACT 390 CFM (Min. - Max.)	200 - 390	200 - 390
ACT 290 CFM (Min. - Max.)	200 - 290	200 - 290
FEATURES		
ACT™ Technology	590, 390, 290	590, 390, 290
Controls	Proximity Touch	Proximity Touch
Speed Levels	6*	6*
Auto Delay-Off	Yes	Yes
CleanAir Function	Yes	Yes
Lighting	LumiLight LED, 6W x4	LumiLight LED, 6W x4
Tri-Level Lighting	Yes	Yes
Filters	Hybrid Baffle x2	Hybrid Baffle x2
Recirculating Option	Yes	Yes
Quick-Lock Installation	Yes	Yes
Magnetic Duct Covers	Yes	Yes
Extension Duct Cover Option	Yes, Up to 12’ Ceiling	Yes, Up to 12’ Ceiling
ADA Compliant	Yes, with remote accessory	Yes, with remote accessory
DUCT SPECIFICATIONS		
Vertical Internal Blower	8” Round	8” Round
Horizontal Internal Blower	NA	NA
AC POWER	120V, 60Hz at Max. 5A	120V, 60Hz at Max. 5A
OPTIONAL ACCESSORIES		
Wireless Remote Control	14000005	14000005
Recirculating Kit	ZRC-03NA	ZRC-03NA
Extension Duct Cover	Z1C-02NA	Z1C-02NA
Make-Up Air Kit	MUA008A	MUA008A
MOUNTING HEIGHT RANGE**	24” - 34”	24” - 34”
WARRANTY	3 years parts, 1 year labor	3 years parts, 1 year labor

CEILING HEIGHT		8’	8.5’	9’	9.5’	10’	10.5’	11’	12’
STANDARD DUCT COVER	**Ducted Mounting Height***	24” - 28”	24” - 34”	24” - 34”	28” - 34”	34” - 34”	NA	NA	NA
	Recirc Mounting Height*	NA	24” - 29.5”	24” - 34”	28” - 34”	34” - 34”	NA	NA	NA
EXTENSION DUCT COVER	**Ducted Mounting Height***	NA	NA	NA	24” - 29”	24” - 34”	24” - 34”	24” - 34”	28” - 34”
	Recirc Mounting Height*	NA	NA	NA	24” - 24.5”	24” - 30.5”	24” - 34”	24” - 34”	28” - 34”

*When ACT™ is enabled the maximum speed levels will change. ACT 590 CFM = 5 speeds, ACT 390 CFM = 4 speeds and ACT 290 CFM = 3 speeds.
**Mounting height refers to distance between top of a 36” tall cooking surface and bottom of hood.

ACT™

Airflow Control Technology™ (ACT™)
is an exclusive feature built into specific Zephyr hoods which can limit the maximum blower CFM to meet local code requirements.

PowerWave™

PowerWave™ 3-Phase Blower Technology
delivers best-in-class performance with unparalleled quiet operation. It provides more power while minimizing noise and improving efficiency.

Specifications subject to change, check zephyronline.com for up-to-date information.
Zephyr Ventilation | 2277 Harbor Bay Parkway, Alameda, CA 94502 | 888.880.VENT

OCT26.0101

c UL us