Wood Pergola

Assembly Instruction – Please keep properly for future reference.

If you find any missing boxes, damaged parts, or accessory shortages, please contact the customer service team of your purchasing channel immediately. We will resolve the issue as quickly as possible.

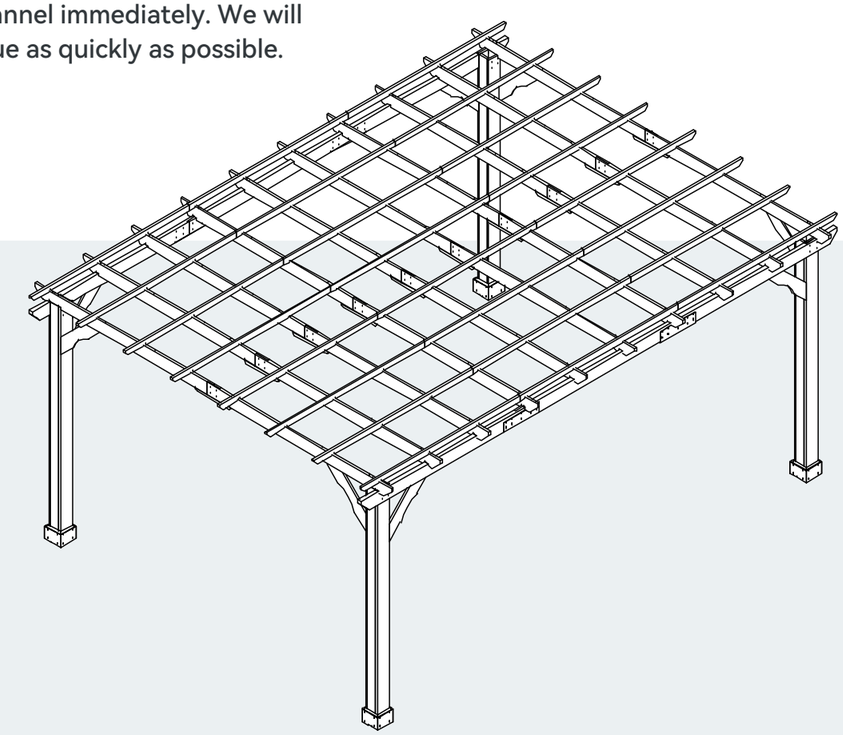

12x16 FT

CONTACT US

- **Email: service@grandtunnel.com**
  In order to receive assistance more quickly, please provide

THE FOLLOWING INFORMATION:

- Order number
- Purchase platform
- Purchase date
- Detailed description of the issue along with photos (if applicable)

Important – Please read these instructions carefully before starting the installation.

SKU:
C000975031
C000975032

V1.0

EN

Wood Pergola

Before Assembly

Thank you for choosing this product!
To ensure safe use and long-term maintenance, please read this manual carefully and keep it properly for future reference.

Packaging Notice:

1. Multi-Box Shipping Notice

This product is packaged in 2 separate boxes for shipping and may arrive in batches at different times. To ensure a smooth assembly process, please make sure all boxes are received before unpacking and starting the installation.

2. Box and Packaging Verification

Each box is labeled with a corresponding number. Please refer to the packing list on the next page of this manual to verify that all boxes have been received.

If you find any missing boxes, damaged parts, or accessory shortages, please contact the customer service team of your purchasing channel immediately. We will resolve the issue as quickly as possible.

Pre-installation Notes

1. Assembly requires five or more people.
2. It is recommended to use a ladder during assembly.
3. Ensure all necessary accessories are prepared before assembly.
4. Assembly is not recommended during heavy wind or rain.
5. Assembly is recommended on level ground.

Safety Warnings

Tool Preparation:
Prepare commonly used tools in advance, such as an electric drill, level, ladder, and gloves.

Foundation Recommendations:
If the ground is not concrete, it is recommended to reinforce the base or purchase an additional foundation kit beforehand.

Regular Fastener Inspection:
Inspect bolts and connectors every quarter. Tighten any loose hardware as needed.

Email : **service@grandtunnel.com**

EN

Post-Rain Drainage Notice:
Clear standing water from the roof to prevent deformation or corrosion caused by water accumulation.

Keep Children Away:
Ensure children stay clear of the installation area and the carport structure during and after assembly to avoid injury.

Follow the Installation Instructions Precisely:
Always follow the step-by-step instructions provided in the manual. Do not skip or rearrange steps, as this may result in instability or incorrect assembly.

Experienced Personnel Recommended:
If you lack DIY experience, the product should be assembled by at least five people with proper installation knowledge, or with professional assistance.

Read the Manual Thoroughly Before Starting:
Be sure to read the entire manual carefully before starting installation.
Understanding the structure and process is essential to avoid injury or errors.

Use Personal Protective Equipment (PPE):
Wear anti-slip gloves, safety shoes, and protective eyewear during installation to avoid injury from sharp edges, falling parts, or tools.

Risks of Improper Installation:
Improper assembly may lead to collapse, bolt failure, wood cracking, or injury, compromising both safety and product longevity.

Customer Service Guide

Thank you for choosing our product! We are committed to providing you with excellent service. If you find any missing parts, damaged packaging, or product damage after receiving all packages, please follow the steps below to quickly contact our customer service team. We will do our best to resolve your issue.

1. Missing Parts

Verify Parts:

1. Refer to the “Parts List” in the manual to verify the name, specifications, and quantity of the missing parts.
2. Take a clear photo of the parts list and mark the missing parts with detailed information, e.g., “Missing 5 pieces of M6×30mm screws.”

Email : **service@grandtunnel.com**

Contact Us:

By Email:
Send an email to **service@grandtunnel.com**, with the subject line “Missing Parts Issue.” Include the following in the email:

- A description of the missing parts and a photo of the parts list.
- Order details (order number, purchase platform, purchase date).

2. Product or Packaging Damage

If it affects normal use:

Steps:
1. Take clear photos or videos showing the damaged parts and the extent of the damage (multi-angle shots are recommended).
2. Email the photos/videos along with order details to **service@grandtunnel.com**, with the subject line “Product Damage Issue.”

Resolution:
After verification, we will arrange for a replacement part, product exchange, or refund as quickly as possible.

If it does not affect normal use:

Steps:
1. Contact our customer service team (by email: **service@grandtunnel.com**).
2. Provide a description of the damage and include relevant photos or videos.

Resolution:
We will provide repair guidance or an appropriate compensation plan based on the specific situation.

Contact Us:

Customer Service Email: **service@grandtunnel.com**

Helpful Tips

To process your issue efficiently, please prepare the following information:

- Order details (order number, purchase platform, purchase date).
- Clear photos or videos.
- We are committed to providing quick and professional solutions, no matter the size of the issue, to ensure your satisfaction.

Thank you for your trust and support!
We hope you enjoy using our product!

Parts List

EN

BOX 1

① 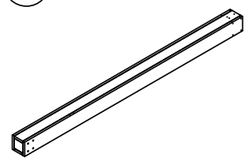	⑤ 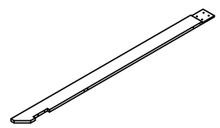	⑥ 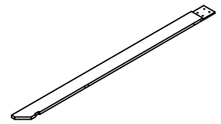	⑪ 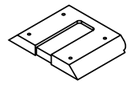
x4	x4	x16	x3
⑫ 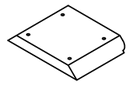			
x8			

BOX 2

② 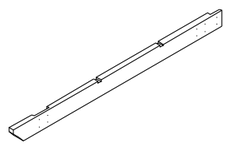	③ 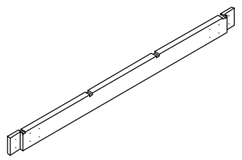	④ 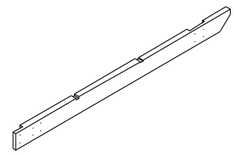	⑦ 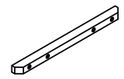
x2	x2	x2	x10
⑧ 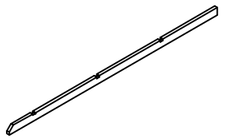	⑨ 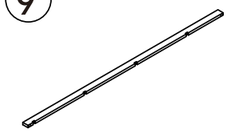	⑩ 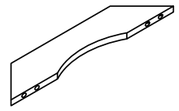	⑪ 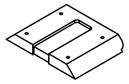
x16	x8	x8	x5

IN BOX 2			
(A) 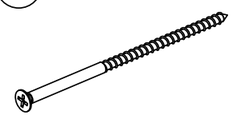 Ø5×120	(B)  Ø5×60	(C)  Ø5×50	(D)  Ø4×30
x24	x112	x40	x152
(E)  M8×145	(F)  M8×28	(G)  M8×45	(H)  Ø22
x16	x40	x40	x152
(I)  M8×5	(J) 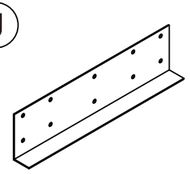 360×92×36	(L)  80×20×2	(M) 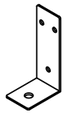 95×50×35
x96	x4	x16	x8
(O) 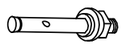 M8×60	(P)  4×180	(N) 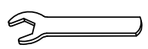	
x8	x8	x2	

Email : **service@grandtunnel.com**

Installation Instructions

EN

1

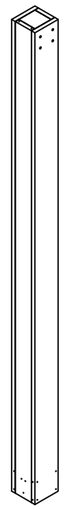

(1) x 4

(11) x 8

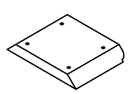

(12) x 8

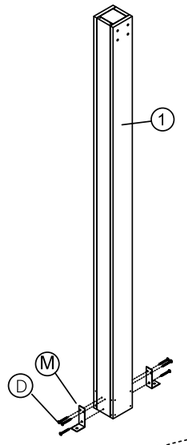

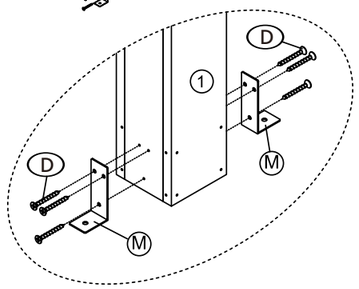

As shown in the diagram, use screw (D) to attach metal plate (M) to post (1).

Step 1

x4

(Repeat four times)

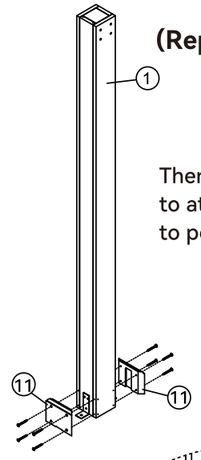

Then use screw (D) to attach board (11) to post (1).

round corner

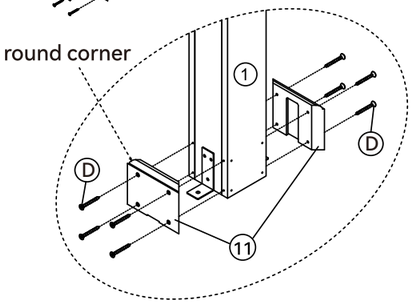

Step 2

Step 3

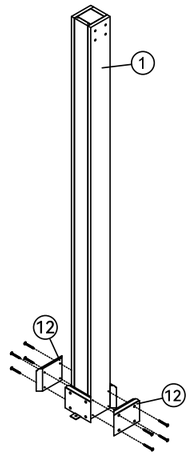

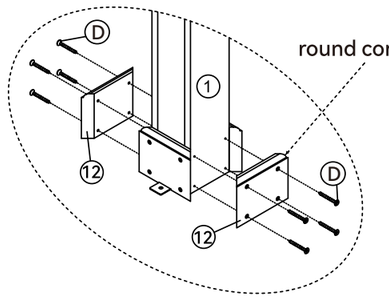

Finally use screw (D) to attach board (12) to post (1).

(D) x 88



Ø4×30

(M) x 8



95 ×50×35

Email : **service@grandtunnel.com**

2

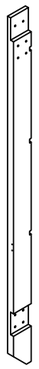

② x2



③ x2

x2

(Repeat twice)

As shown in the diagram, pass screw (G) through the corresponding holes of metal plate (J), board (2), and board (3), then put washer (H) and nut (I) on the screw, and tighten it with wrench (N).

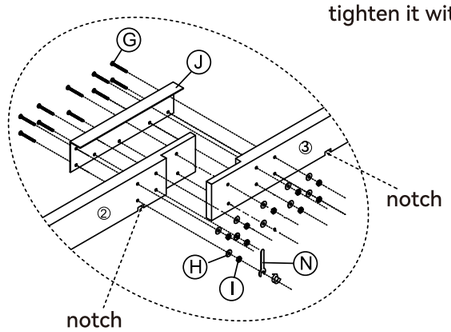

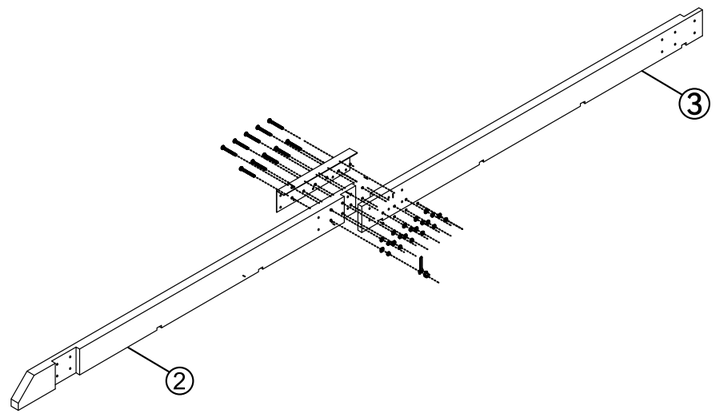

G x 20	H x 20	I x 20	J x2	N x2
 M8×45	 Ø22	 M8×5	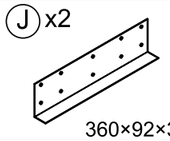 360×92×36	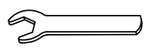

Email : **service@grandtunnel.com**

3



④ x2

x2

(Repeat twice)

As shown in the diagram, pass screw (G) through the corresponding holes of metal plate (J), board (3), and board (4), then put washer (H) and nut (I) on the screw, and tighten it with wrench (N).

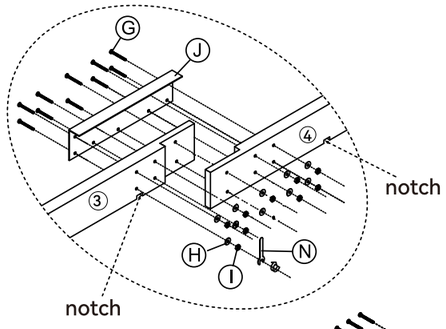

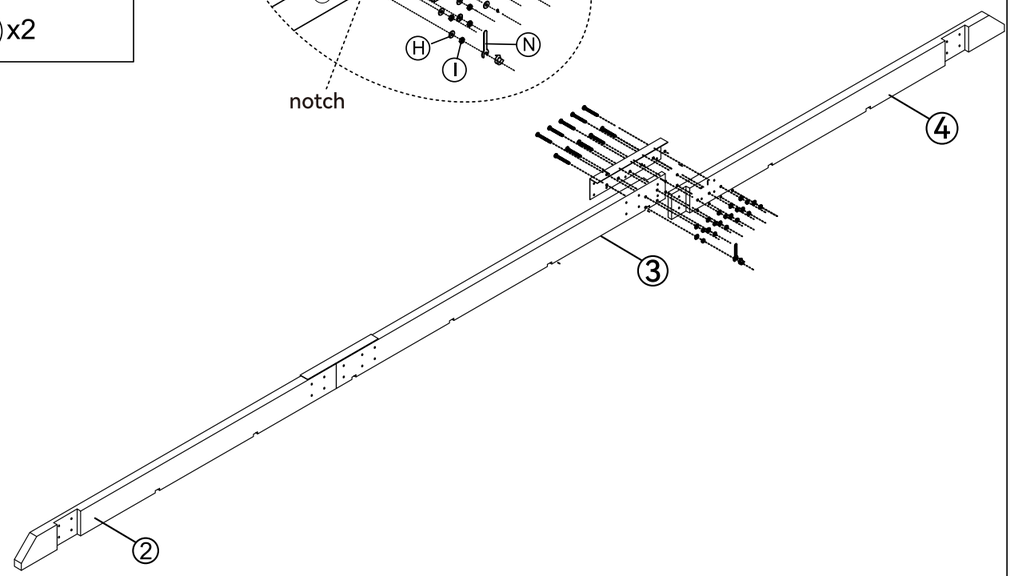

G x 20	H x 20	I x 20	J x2	N x2
 M8×45	 Ø22	 M8×5	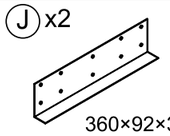 360×92×36	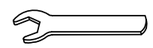

Email : **service@grandtunnel.com**

EN

4

As shown in the diagram, pass screw (E) through the corresponding holes of board (2) and post (1), then put washer (H) and nut (I) on the screw, and tighten it with wrench (N).

x2
(Repeat twice)

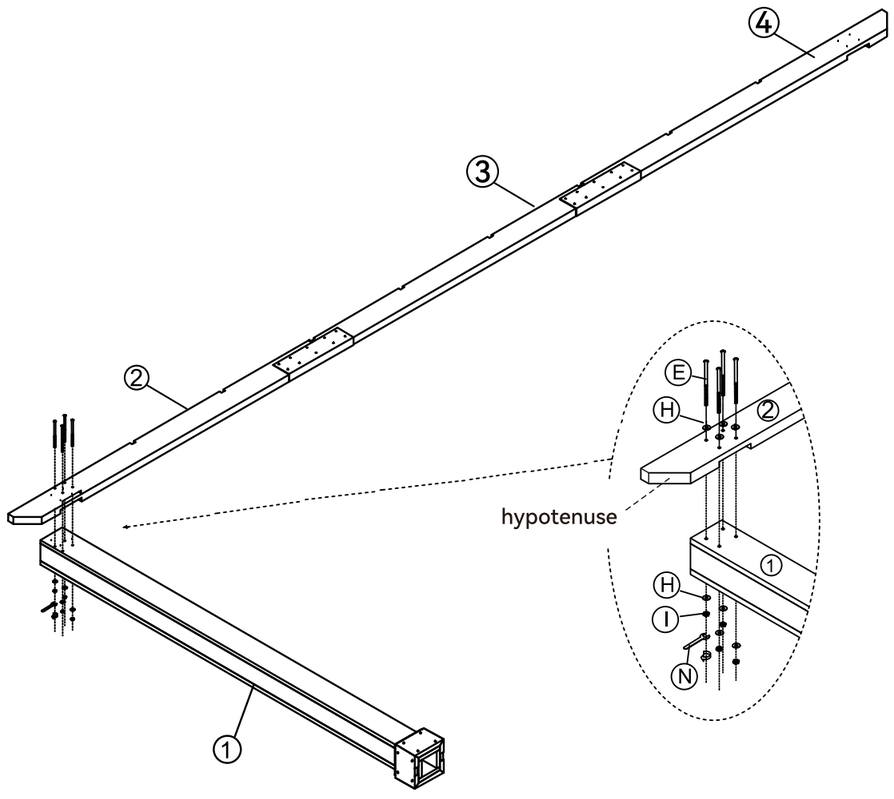

Ⓔ×8	Ⓗ×16	Ⓘ×8	Ⓝ×2
M8×145	Ø22	M8×5	

Email : **service@grandtunnel.com**

5

As shown in the diagram, pass screw (E) through the corresponding holes of board (4) and post (1), then put washer (H) and nut (I) on the screw, and tighten it with wrench (N).

x2
(Repeat twice)

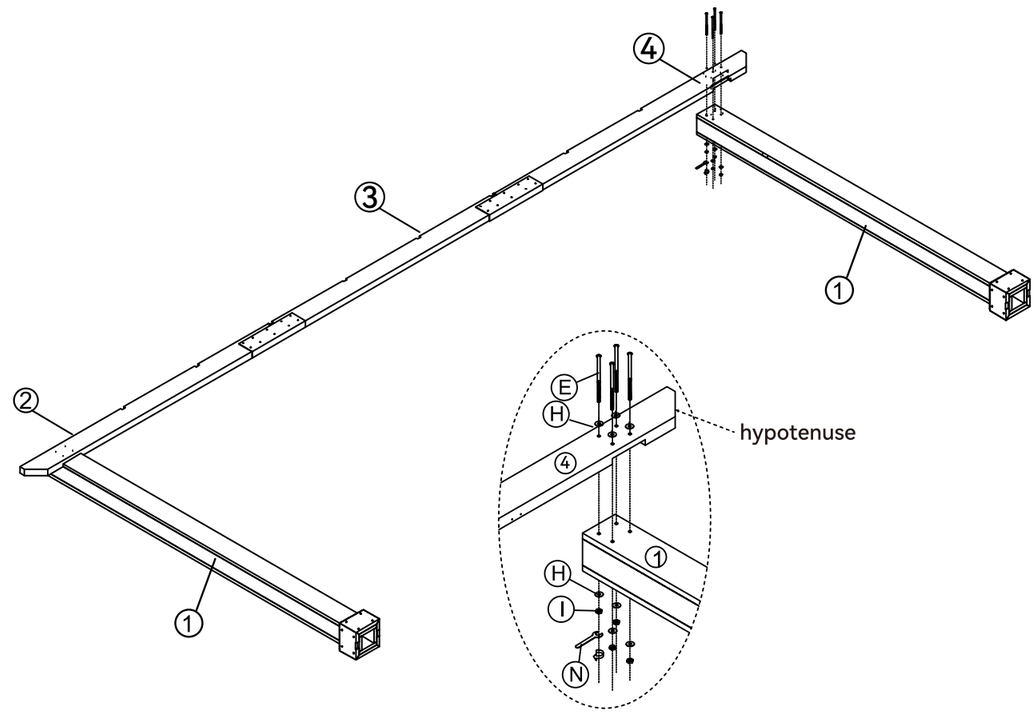

Ⓔ×8	Ⓗ×16	Ⓘ×8	Ⓝ×2
M8×145	Ø22	M8×5	

Email : **service@grandtunnel.com**

EN

6

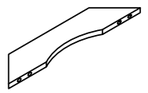

⑩ x 4

As shown in the diagram, use screw (B) to fix board (10) to posts (1),and boards (2), (3), and (4).

x2
(Repeat twice)

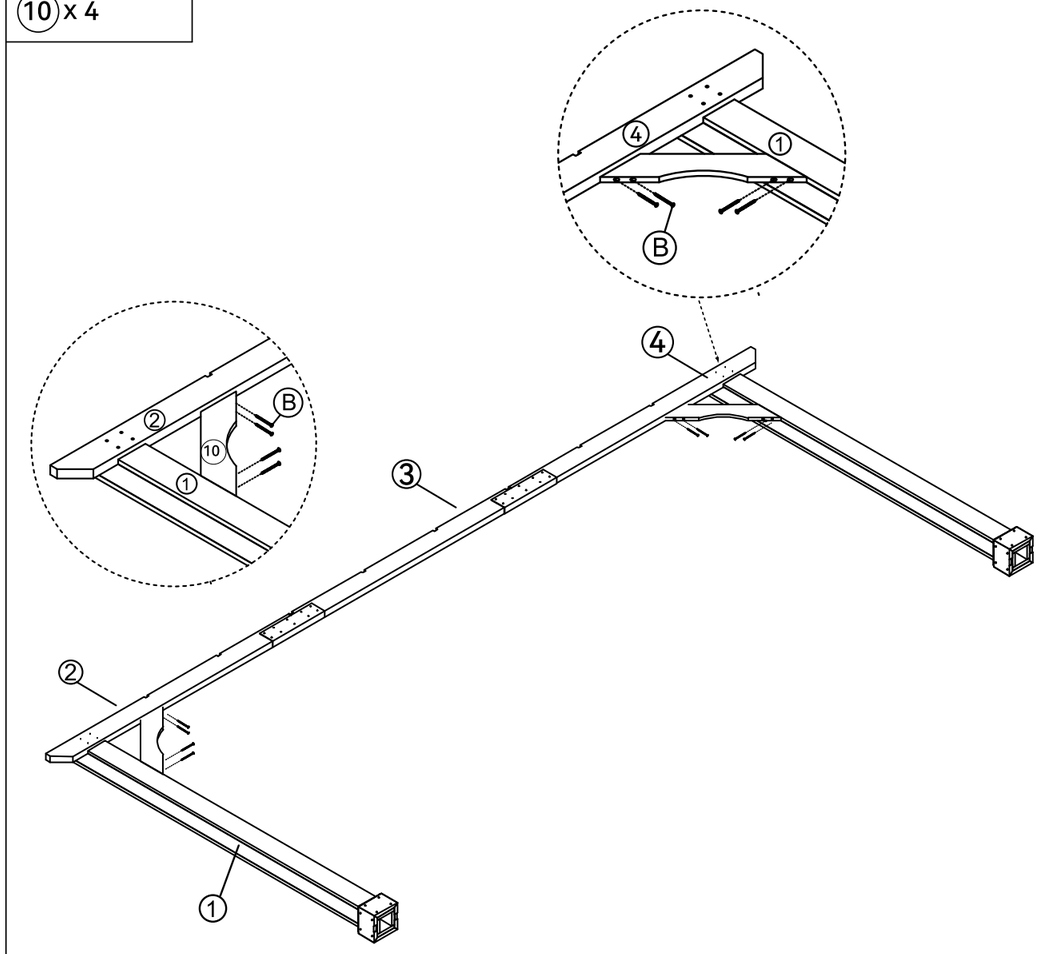

Ⓑ x16



Ø5×60

Email : **service@grandtunnel.com**

7



⑤ x 4

⑦ x 2

x2
(Repeat twice)

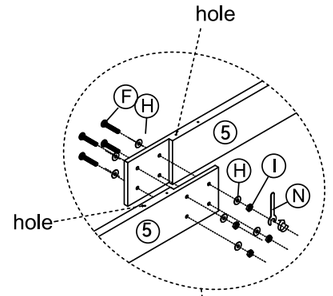

As shown in the diagram, pass screw (F) through the corresponding holes of two boards (5), then put washer (H) and nut (I) on the screw, and tighten it with wrench (N).

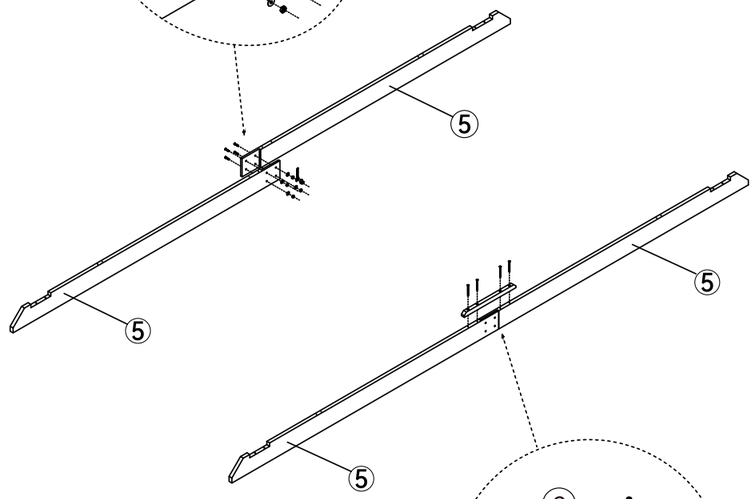

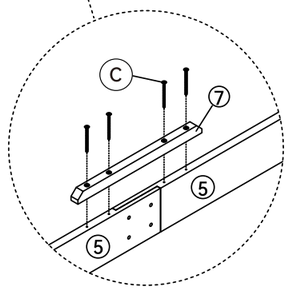

As shown in the diagram, use screw (C) to attach board (7) to board (5).

Ⓒ x 8

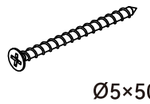

Ø5×50

Ⓕ x 8



M8×28

Ⓗ x 16



Ø22

Ⓘ x 8



M8×5

Ⓝ x2

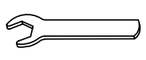

Email : **service@grandtunnel.com**

EN

8

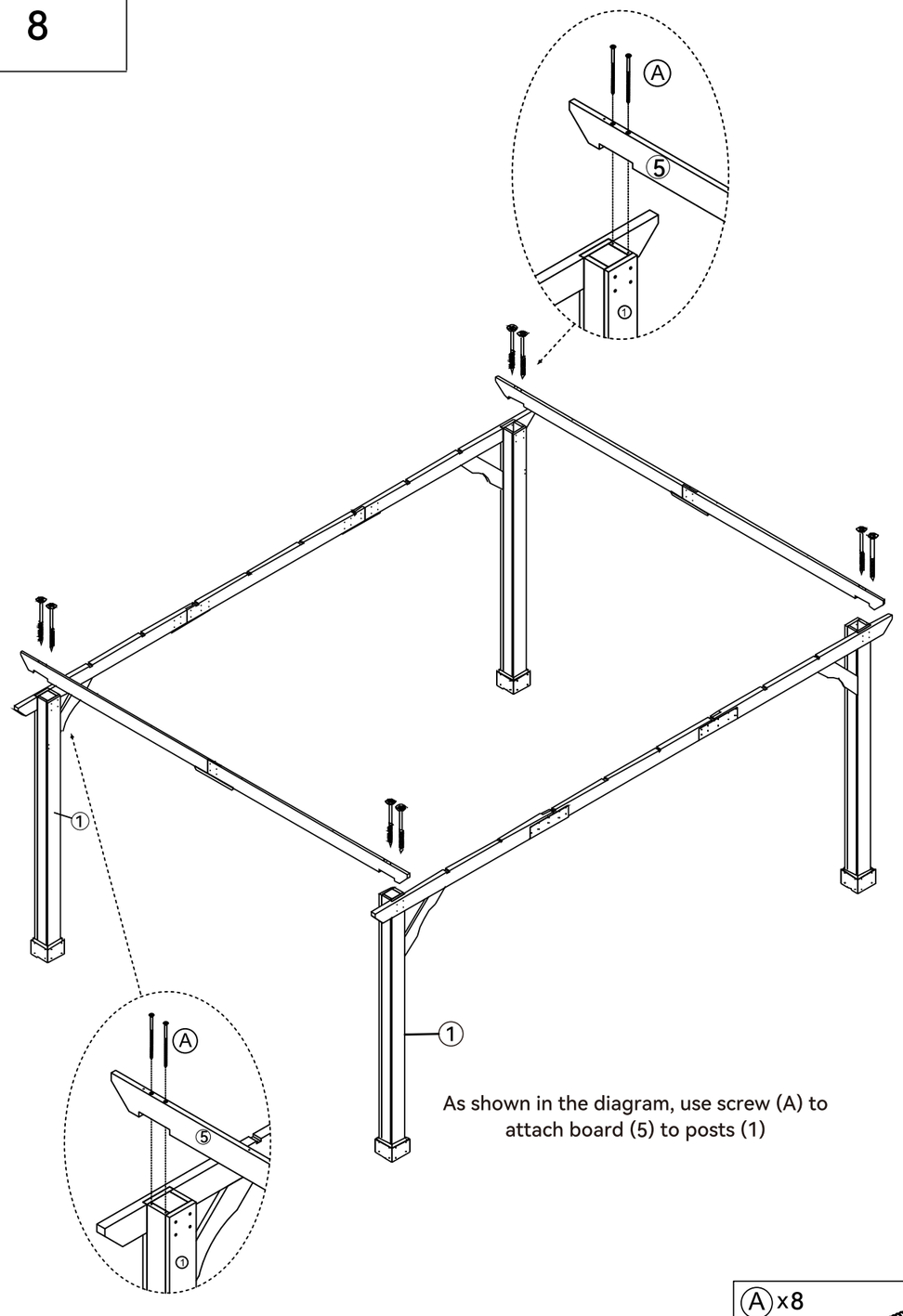

As shown in the diagram, use screw (A) to attach board (5) to posts (1)

A x8

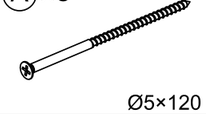

Ø5×120

Email : **service@grandtunnel.com**

9

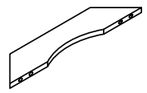

10 x 4

As shown in the diagram, use screw (B) to attach board (10) to posts (1)and board (5).

B x16

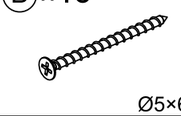

Ø5×60

Email : **service@grandtunnel.com**

EN

10

x8

(Repeat eight times)



6 x16

7 x8

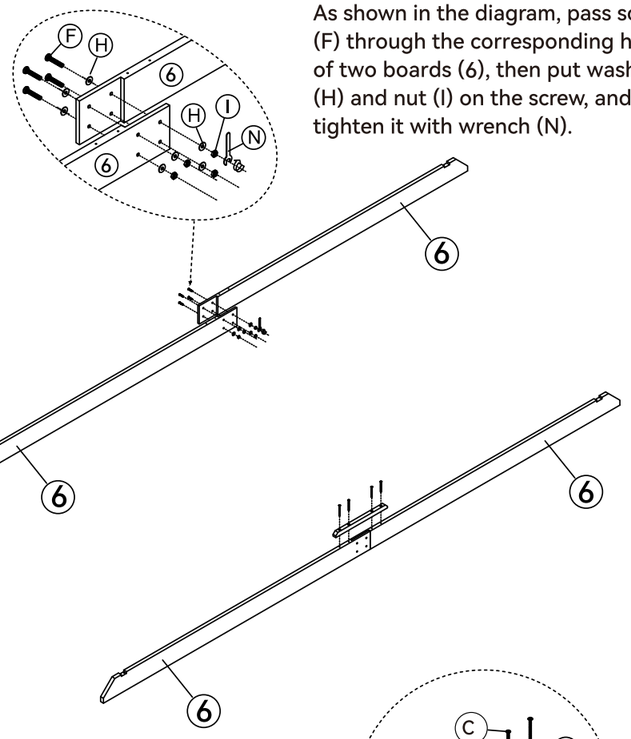

As shown in the diagram, pass screw (F) through the corresponding holes of two boards (6), then put washer (H) and nut (I) on the screw, and tighten it with wrench (N).

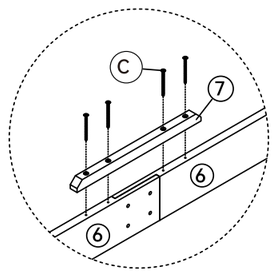

As shown in the diagram, use screw (C) to attach board (7) to board (6).

C x32	F x 32	H x 64	I x32	N x2
Ø5×50	M8×28	Ø22	M8×5	

Email : **service@grandtunnel.com**

11

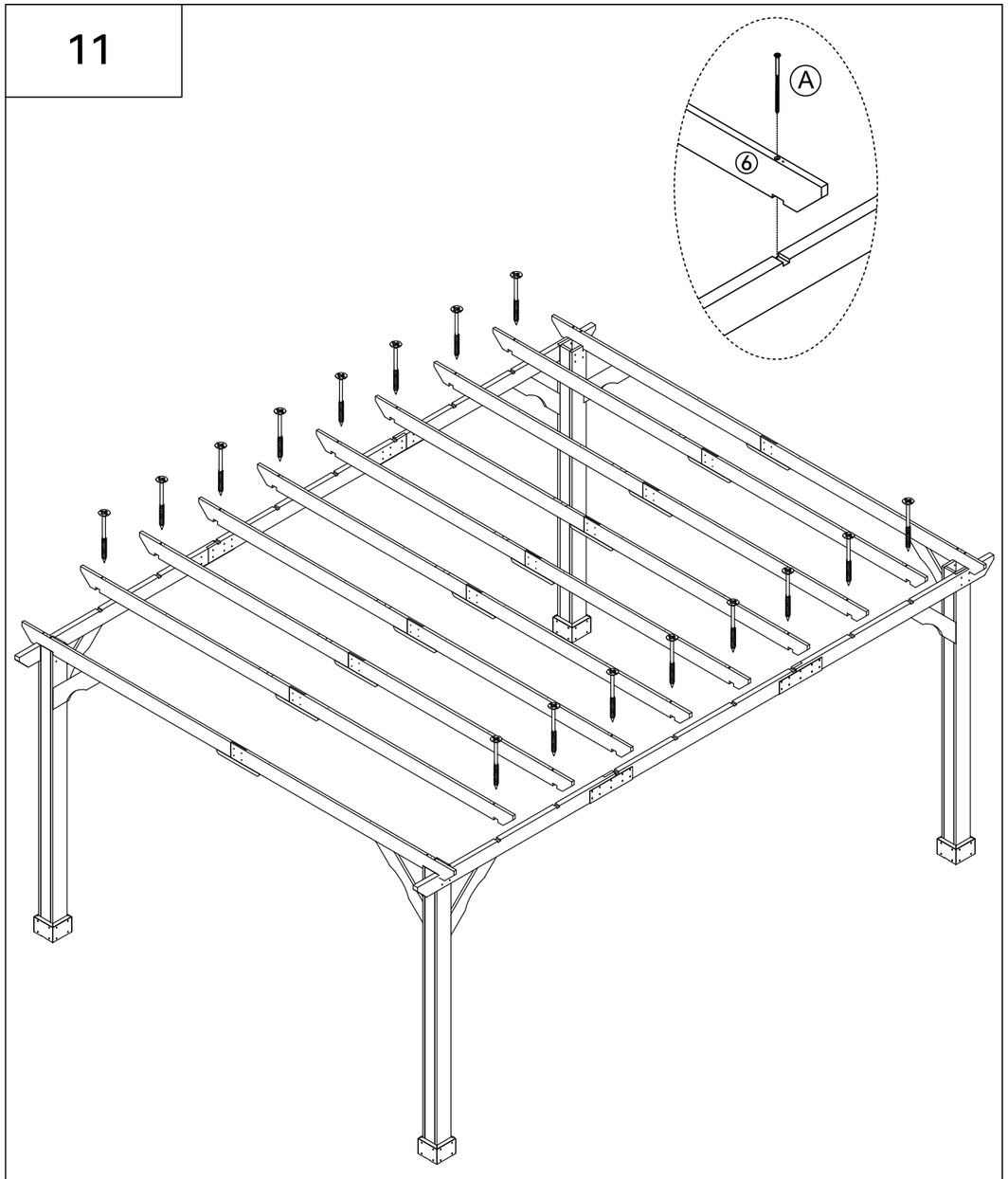

As shown in the diagram, place board (6) into the slot, then use screw (A) to fix board (6).

A x16

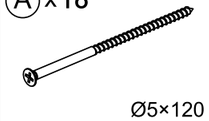

Ø5×120

Email : **service@grandtunnel.com**

EN

12



8 x 16

9 x 8

x8

(Repeat eight times)

Note: Three or more people are needed to collaborate on this assembly step.

As shown in the diagram, use screw (D) and metal plate (L) to connect and fix boards (8) and (9), (9) and (8)

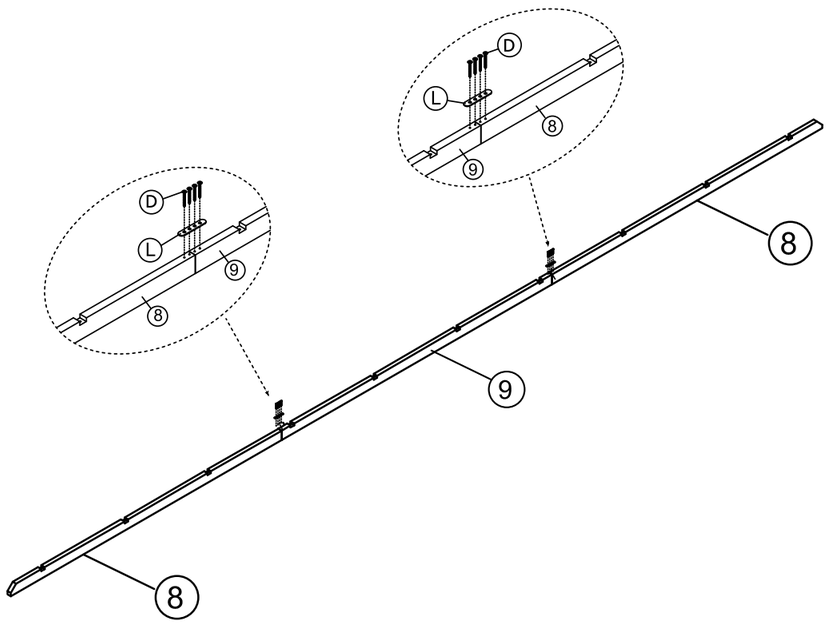

D x 64

Ø4×30

L x 16

80×20

Email : **service@grandtunnel.com**

13

As shown in the diagram, align the grooves and holes of the two assembled long strips (made of boards (8), (9), and (8) with the corresponding holes on the illustrated boards, insert boards (5) and (6) into the corresponding slots, and then use screw (B) to secure them.

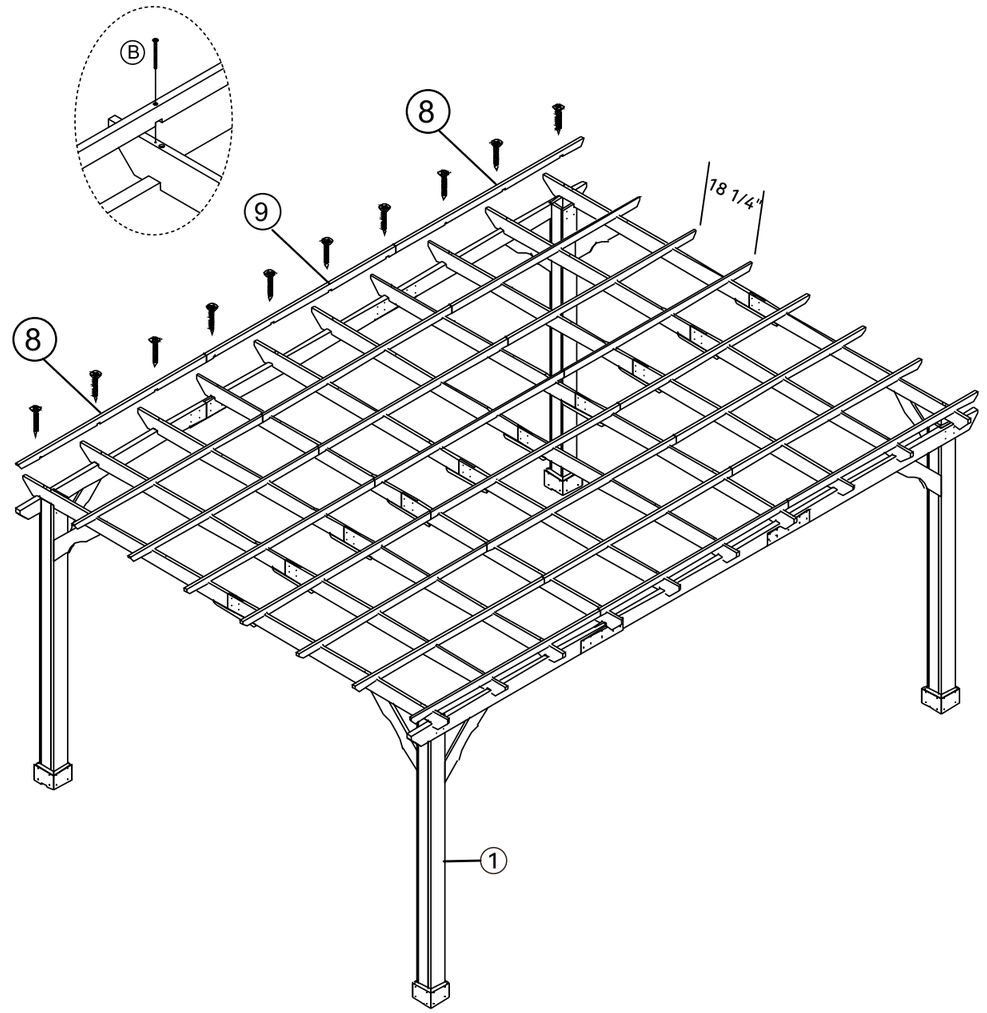

B x 80

Ø5×60

Email : **service@grandtunnel.com**

EN

14

As shown in the diagram, mark the fixed positions on the concrete ground and drill holes. Align the holes of the post's metal plate with the holes in the concrete. Insert expansion tube (O) into the hole and tighten the nut on it clockwise. For lawn installation, align the tent peg (P) with the hole on the metal plate and hammer it into the ground to secure the product.

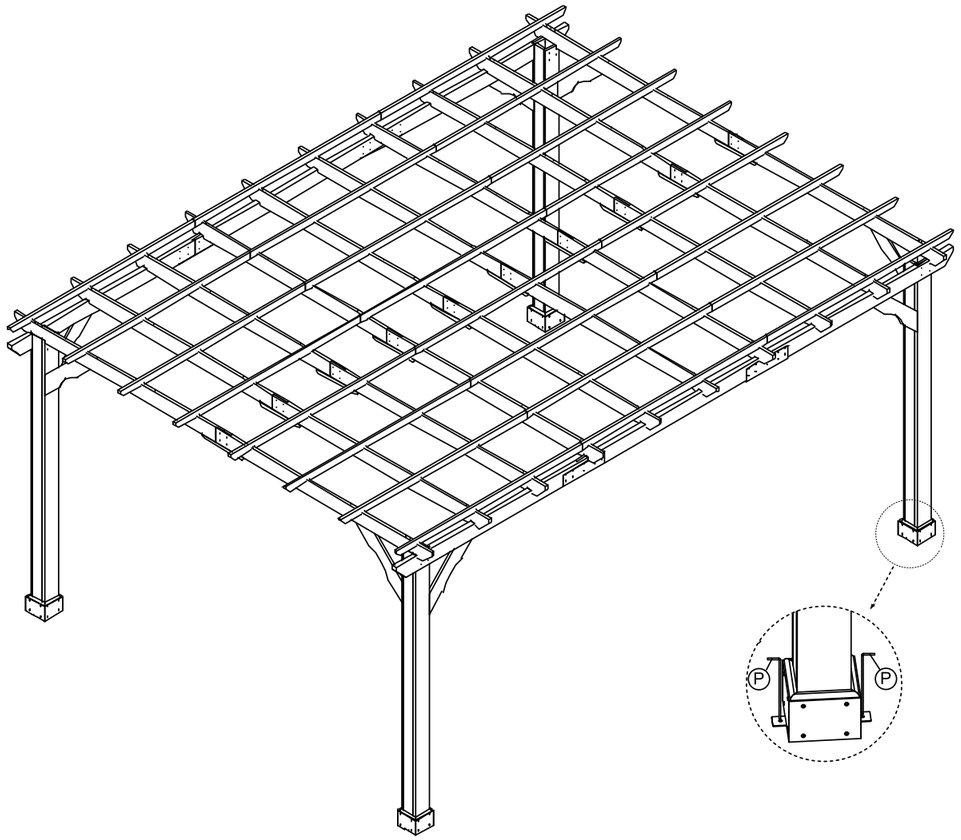

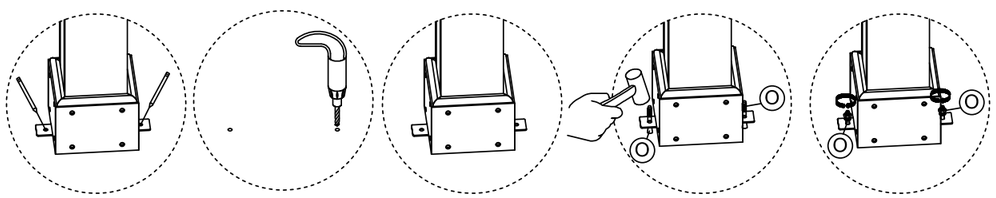

Position **Drill holes** **Place components** **Insert** **Tighten**

O x12	P x12
 M8×60	 4×180

Email : **service@grandtunnel.com**

15

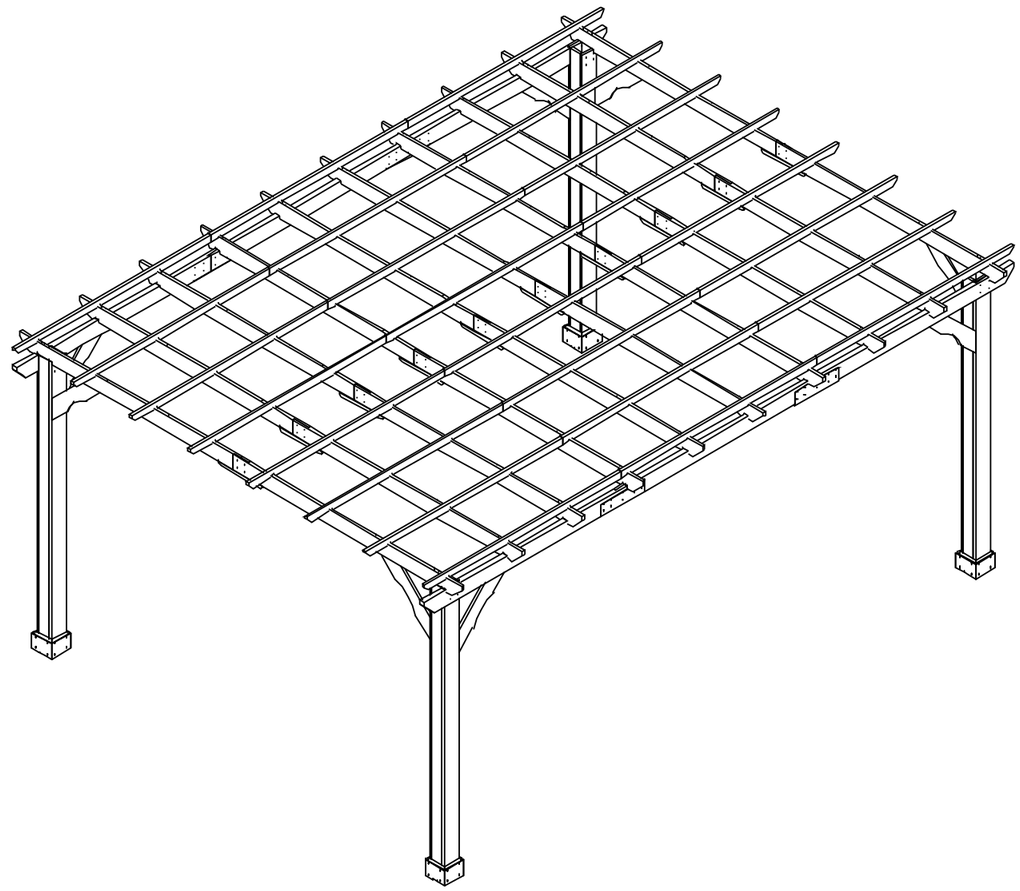

Assembly completed

Email : **service@grandtunnel.com**

EN