V1.2 US 08/2025

CEILING FAN INSTALLATION MANUAL

READ AND SAVE THESE INSTRUCTIONS

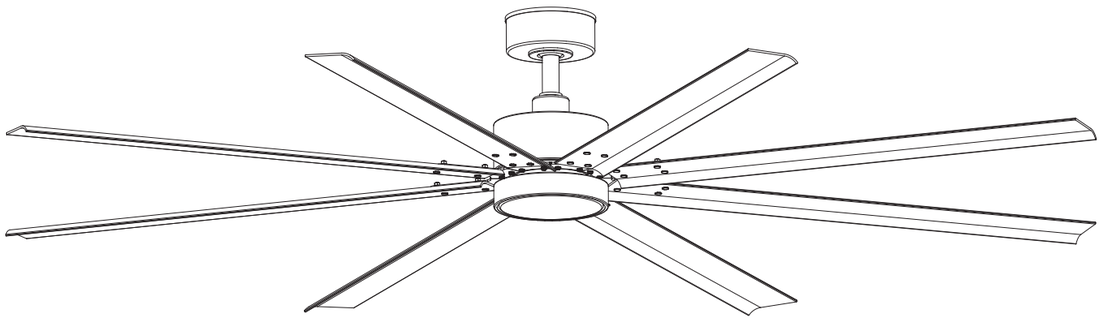

If you have any after-sales questions, please provide this series number and model number at the time of inquiry.

Models: #DCL65802
#DCL72802

CONGRATULATIONS ON YOUR PURCHASE

Congratulations on purchasing the latest in energy saving ceiling fans. This fan runs on DC (direct current) power which gives it the benefit of being super energy efficient whilst still maintaining high volume air-movement and silent operation.

Energy Saving - The DC motor is the latest technology in fan design. Its highly efficient motor saves up to 65% more energy than ceiling fans with traditional AC motors.
Silent operation - This DC fan motor is programmed with a stabilised current which efficiently reduces motor noise.
Low operating temperature - The DC power is managed effectively which brings down the motor operating temperature to less than 50℃. This results in a much cooler motor than a standard AC fan and increases the longevity of the motor.
6 speed remote control - Regular AC ceiling fans usually come with only 3 speeds, this DC fan comes complete with a 6 speed remote, which gives greater choice of comfort levels.

SAFETY PRECAUTIONS

Read and Save These Instructions

1. WARNING - To avoid possible electrical shock, before installing or servicing your fan, disconnect the power by turning off the circuit breaker of the fuse box to the outlet box.
2. WARNING - To reduce the risk of fire, electric shock, or personal injury, mount to outlet box marked "acceptable for fan support of 35 lbs (15.9 kg) or less" and use the mounting screws provided with the outlet box and/or support directly from building structure. Most outlet boxes commonly used for the support of luminares may not be acceptable for fan support and may need to be replaced. Consult a qualified electrician if in doubt.
3. WARNING - To reduce the risk of fire or electric shock, do not use this fan with any solid-state speed control device.
4. WARNING - Do not insert foreign objects in between rotating fan blades.
5. CAUTIONS - All wiring must be in accordance with the National Electrical Code (ANSI/NFPA 70) and local electrical codes. Electrical installation should be performed by a qualified licensed electrician.
6. To reduce the risk of injury to person, the fan must be mounted with a minimum of 7 feet clearance from the bottom edge of the blades to the floor.
7. After marking electrical connections, spliced conductors should be turned upward and pushed carefully up into the outlet box. The wires should be spread apart with the grounded conductor and the equipment grounding conductor on one side of the outlet box.
8. To Reduce The Risk Of Fire, Electric Shock Or Injury To Persons, Do Not Use Replacement Parts That Have Not Been Recommended By The Manufacturer (e.g. Parts Made At Home Using A 3D Printer).
9. The fan is suitable for use in Wet Locations when installed in a GFCI protected branch circuit.

TOOLS REQUIRED

Ladder
Wire Strippers
Pliers
Phillips Screwdriver

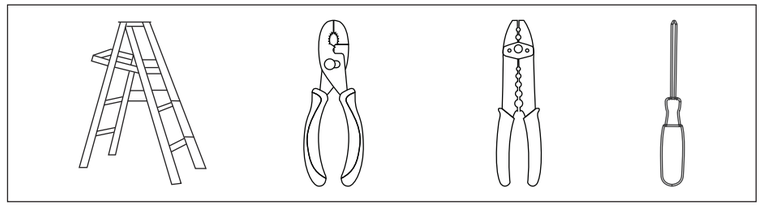

PARTS LIST

Unpack your fan and check the contents. You should have the following:

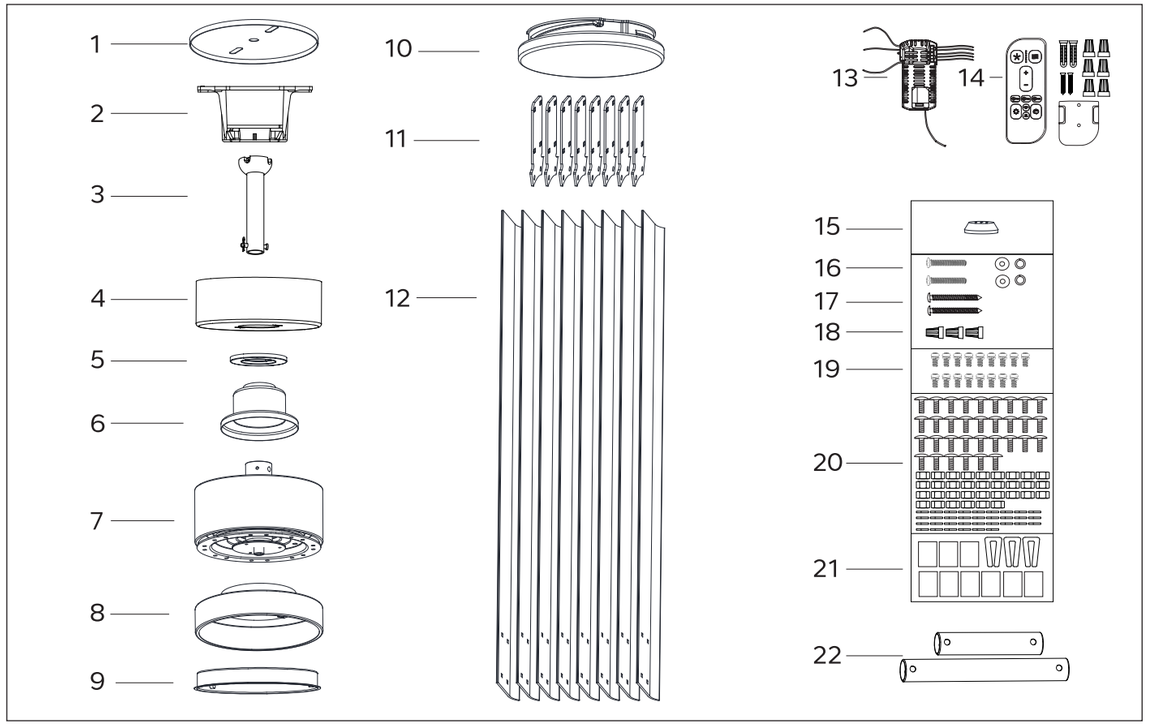

1. Silicone pad x 1
2. Mounting bracket x 1
3. Downrod ball assembly x 1
4. Ceiling canopy x 1
5. Canopy cover x 1
6. Coupling cover x 1
7. Fan motor assembly x 1
8. Light Plate x 1
9. Light kit x 1
10. Lamp shade x 1
11. Blade arms x 8
12. Fan blades x 8
13. Remote receiver x 1
14. Remote control x 1
15. Ball silicone Cover x 1
16. Machine screws x 2 / Flat washers x 2 / Spring washers x 2
17. Wood screws x 2
18. Wire nuts x 3
19. Blade arm screws x 17
20. Blade screws x 33 / Spring washers x33 / nuts x 33
21. Balance kit x 3set
22. Extension downrods x 2

MOUNTING OPTION

If there isn't an existing outlet box, then install one using the following instructions:
· Disconnect the power by removing the fuses or turning off the circuit breakers.
· Secure the outlet box (A) (not included) directly to the building structure. Use appropriate fasteners and materials (not included). The outlet box and its bracing must be able to fully support the weight of the moving fan (at least 35 lbs). Do not use a plastic outlet box.
· Figures below show three different ways to mount the outlet box (A) (not included).

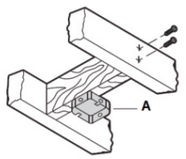

Fig. 2

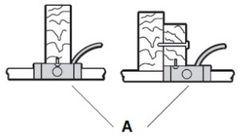

Fig. 3

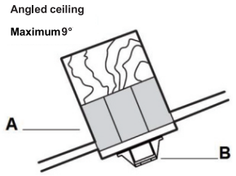

Fig. 4

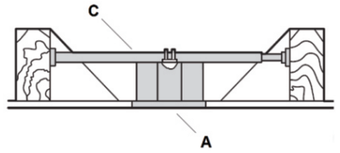

Fig. 5

This fan hanging system supports a maximum 9 degree angled ceiling installation. **Fig. 4**

NOTE: If you are installing the ceiling fan on a sloped ceiling, you may need a longer downrod to maintain proper clearance between the tip of the blade and the ceiling.
NOTE: The ceiling fan must be installed in a location so that the blades are spaced 300 mm from the tip of the blade to the nearest objects or walls.
NOTE: For angled ceiling installation, the opening of the mounting bracket (B) must be pointed toward the peak.

To hang your fan where there is an existing fixture but no ceiling joist, you may need an installation hanger bar (C) as shown in **Fig.5**. Make sure the hanger bar you purchase has been designed for use with ceiling fans.

INSTALLING MOUNTING BRACKET

Before you begin installing the fan, turn off circuit breakers and wall switch to fan supply line leads.
WARNING: Failure to disconnect the power supply prior to installation may result in serious injury.
To reduce the risk of electrical shock, the fan must be installed with an isolating wall control/switch.

Two options for installation, choose which one works for your location.
Remove an existing bracket prior to installation.
Only use the provided mounting bracket that came in your fan's box.

Thread wires from ceiling through silicone pad.

Option A: Use outlet box screws (provided with outlet box) when securing the mounting bracket and Silicone pad to the fan-rated metal outlet box.

NOTE: Do not mount directly to sheetrock or ceiling tiles.
Option B: Use wood screws when securing the mounting bracket to the ceiling joist or support structure with an approved fan-rated electrical box.
If not mount to ceiling outlet box, use wood screws and flat washers and mount securely to the ceiling beam. Ensure at least 30 mm of the screw is threaded into the support.

Option A:

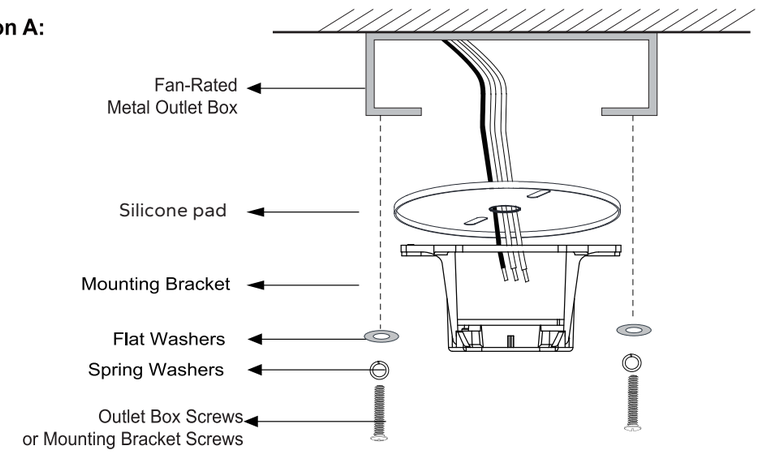

Option B:

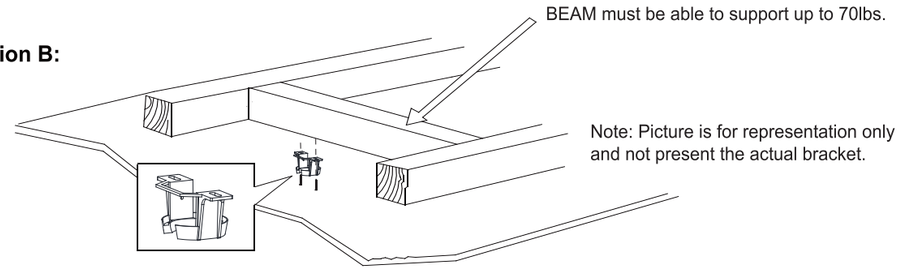

DOWNROD ASSEMBLY

Select the length of the downrod on your ceiling height, if needs use extension downrod:
Locate the downrod assembly. Loosen the security screws to release the cross pin on black hanging ball.

Remove the hanging ball from the downrod and save all parts.

Install cross pin through and tighten 2 security screws to hanging ball on the extension downrod.

Installation extension downrod:

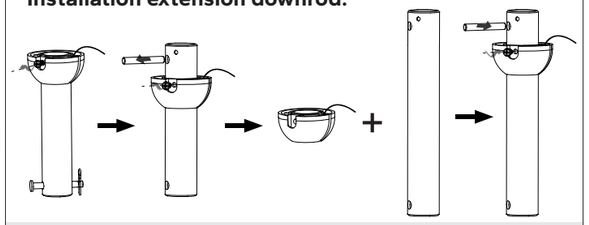

Note: If the fan wires is not length enough when installation extension downrod ,an extension wires should be used.

Install downrod to motor:
Locate the downrod assembly. Remove the lock pin & downrod pin from the downrod and save all parts.

Thread fan wires from motor assembly through downrod .
Place the downrod into the top of fan motor housing until holes for downrod pin align with holes in coupling.

NOTE: Make sure wires do not get twisted. Insert downrod pin through coupling and downrod, securing the downrod by tightening 2 security screws. Place coupling cover & canopy cover & canopy in between the downrod and hanging ball, then replace the downrod ball and insert cross pin through it before tightening setscrew against it.

WARNING: Failure to tighten setscrew on downrod ball completely could result in fan becoming loose and possibly falling.

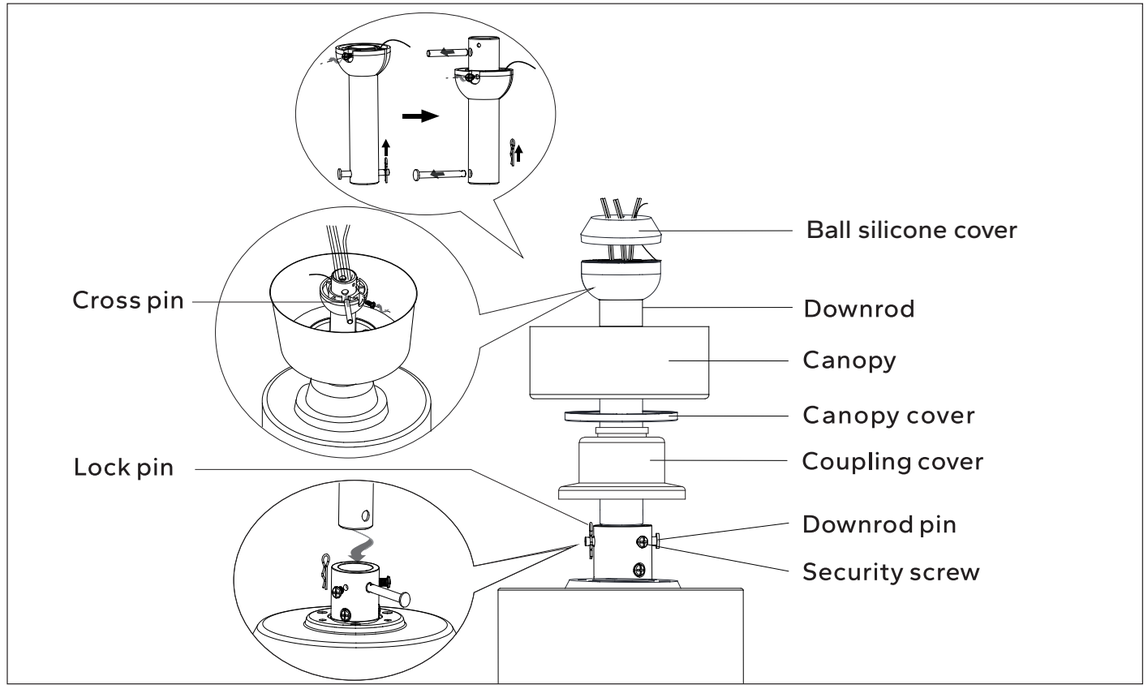

Thread six wires from fan motor assembiy through six holes of ball silicone cover .

HANGING THE FAN MOTOR ASSEMBLY

Carefully lift the fan motor assembly onto the mounting bracket that was attached to the outlet box.

Turn the entire assembly until the check tab (stopper of bracket) drops into the notch of the downrod ball and seats firmly.

NOTE: The entire fan motor assembly should not rotate when seated properly.

WARNING: Failure to seat tab in the notch of the hanging ball could cause damage to electrical wire and possible shock or fire hazard.

WARNING: To avoid possible shock, do not pinch wires between the downrod/hanging ball assembly.

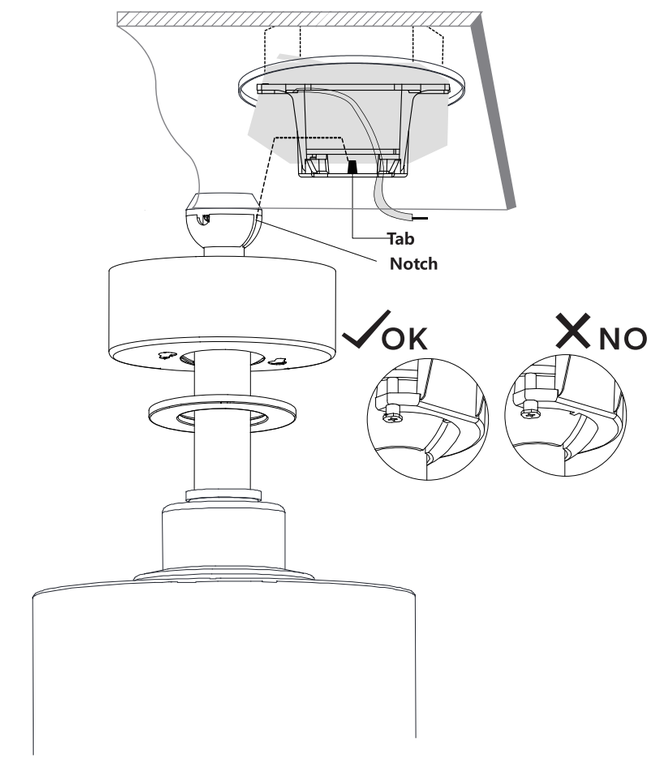

WIRING DIAGRAMS

WARNING: To avoid possible electrical shock, be sure power is turned off at the main fuse box before installing.

Follow this wiring diagram.

When fan is secured in place on the mounting bracket, make electrical connections as follows:

- Connect BLACK wire (AC IN L) from the outlet box to BLACK wire (AC IN L) from receiver.
- Connect WHITE wire (AC IN N) from the outlet box to WHITE wire(AC IN N) from receiver.
- Connect GREEN ground wire from the remote receiver and GREEN ground wire from the mounting bracket , hanging ball and motor to ground wire (bare copper) from outlet box. Make sure to use wire nuts provided with your fan.
- Connect RED (TO MOTOR W) wire from the motor to RED (TO MOTOR W) wire from receiver.
- Connect YELLOW (TO MOTOR V) wire from the motor to YELLOW (TO MOTOR V) wire from receiver.
- Connect BROWN (TO MOTOR U) wire from the motor to BROWN (TO MOTOR U) wire from receiver.
- Connect BLUE (FOR LIGHT L) wire from the motor to BLUE (FOR LIGHT L) wire from receiver.
- Connect WHITE (FOR LIGHT N) wire from the motor to WHITE (FOR LIGHT N) wire from receiver.
- Wrap each wire connection separately with electrical tape for extra secure connection.

NOTE: After wire connections have been made, turn leads upward and carefully push them into the outlet box. Separate black wires on one side of the box, white and green wires on the other side.

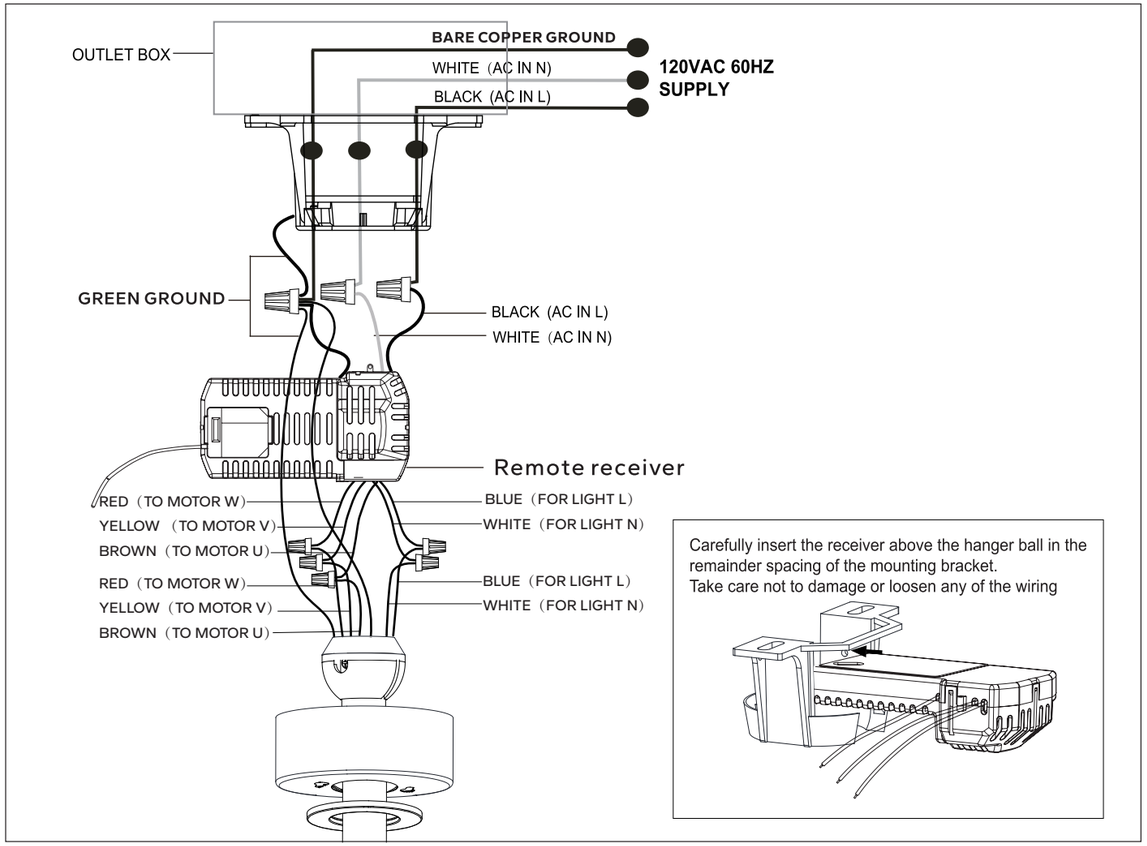

Carefully insert the receiver above the hanger ball in the remainder spacing of the mounting bracket.
Take care not to damage or loosen any of the wiring

CANOPY ASSEMBLY

Locate 2 screws on the underside of the mounting bracket.
Rotate the canopy so that screws slide into the narrow ends of the slots.
Tighten the screws firmly.
Slide the canopy cover up to the canopy and snap it to cover the screws.

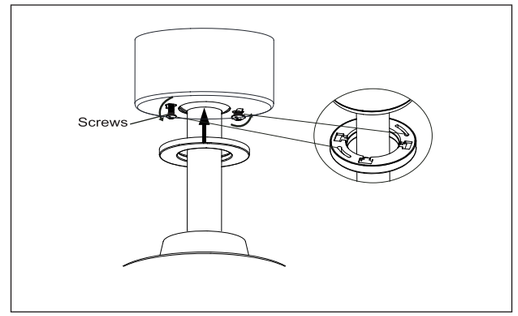

BLADES INSTALLATION

Attach the blade to the blade arm using the four blade screws , spring washers and nuts provided.

Take note the correct side of the blade with the marking “THIS SIDE UP” is installed upward.

Repeat this process for remaining blades .Tighten all screws securely after all the blades are installed to blade arm.

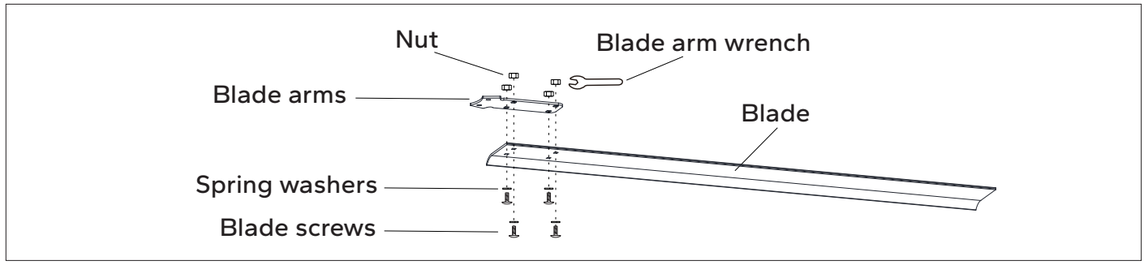

Attach the blade assembly to the fan motor assembly using the two blade arm screws provided. Repeat this process for remaining blades assembly.Tighten all screws securely after all the blades assembly are installed to motor.

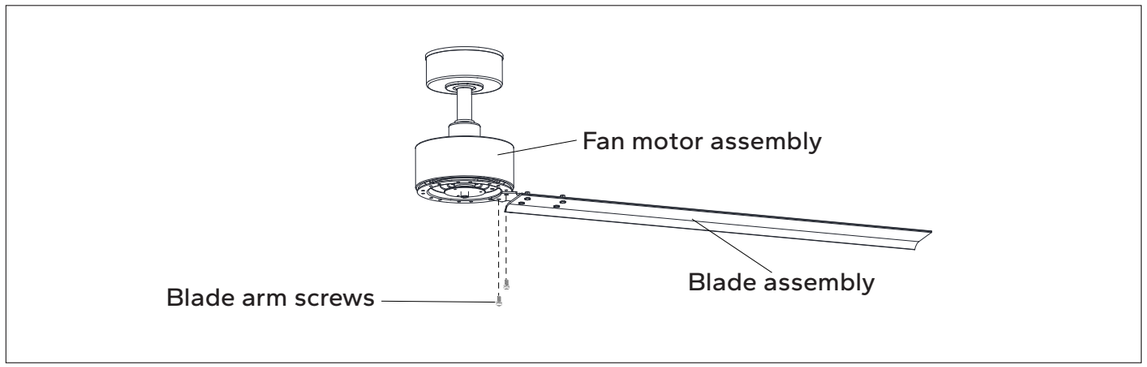

WARNING: To reduce the risk of personal injury, do not bend the blade during assembly or after installation. Do not insert objects in the path of the fan blades.

LIGHT KIT INSTALLATION

Loosen the two slot screws and remove the third screws and star washer on the motor.

Align the two slot screws of the motor part with the keyhole slots of the light plate. Turn the light plate clockwise until the slot screws are firmly at the end of the slots, Tighten the third screw and the two slot screws to secure the light plate .

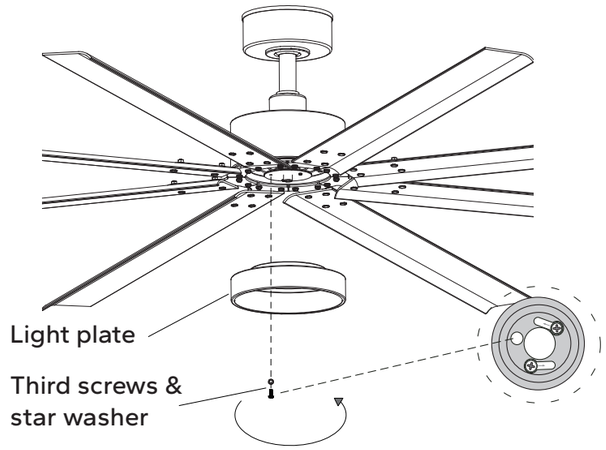

Connect the light wire and green wire on the motor with the light source wire and green wire on the light kit.

Loosen the two slot screws and remove the third screws and star washer on the light plate.

Align the two slot screws of the light plate with the keyhole slots of the light kit. Turn the light kit clockwise until the slot screws are firmly at the end of the slots, Tighten the third screw and the two slot screws to secure the light kit .

Install the lamp shade.

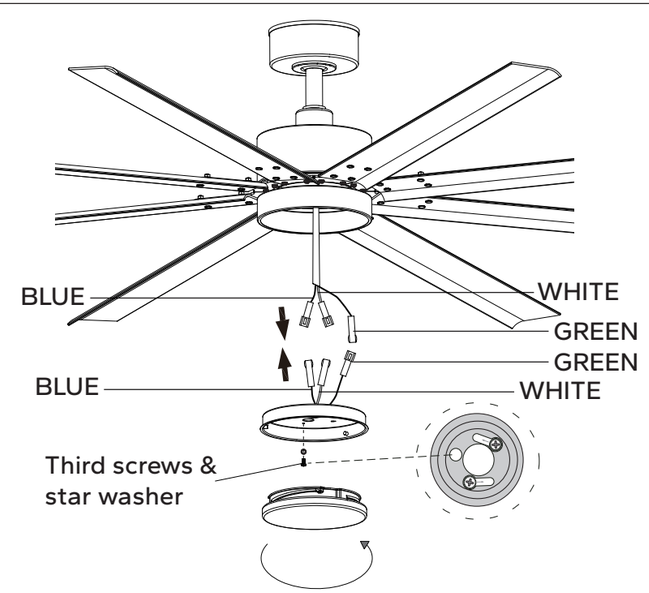

REMOTE CONTROL OPERATION

FUNCTION INSTRUCTION OF EMITTER

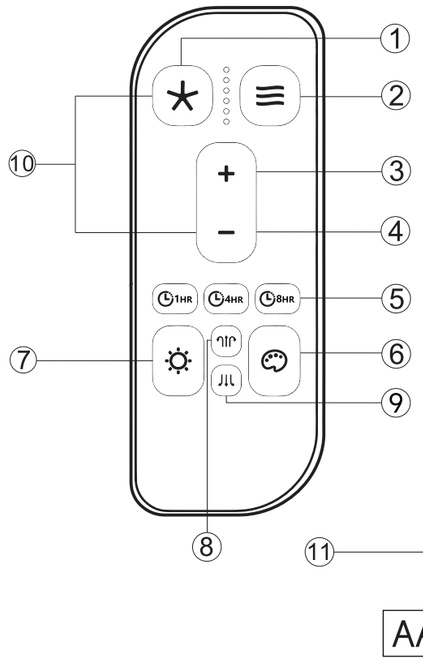

① Fan On/Off
Pairing button

② Natural Wind Mode
The fan will operate among speed 4, 1, 5, 2, 6 and 3 at the intervals of 1 minute until the mode is canceled

③ Raise Fan Speed

④ Lower Fan Speed

⑤ Fan Timer 1H-4H-8H

⑥ Correlated Color Temperature
Click for color temperature cycle among 3000-4000 -5000K

⑦ Light On/Off
Quick press for light on or off and press & hold for dimming among 10%-100%

⑧ Winter Mode

⑨ Summer Mode

⑩ Beep On/Off
Press the fan button & minus button for 3 seconds to turn on/off beep

⑪ Battery: 2*AAA 1.5V (NOT INCLUDED)

Kindly Reminders

1. Your fan's remote and receiver have already been paired before. The learning mode is only necessary if they lose control during or after installation.
2. To use learning mode for pairing the remote with receiver, resotre power to your fan and press & hold the "✳" button. You must press the "✳" button for 5 seconds within 60 seconds of restore the power to the fan. The pairing is successful until 3 beeps are heard.
3. If the remote can't control the receiver, check the battery's orientation and whether it's touching properly. Also, check if the battery is full or empty.
4. If the remote can't control the receiver, check if there are other similar remote-controlled products nearby. Products with the same frequency can interfere with each other.
5. A low battery voltage can reduce the remote's sensitivity and signal reception. Replace the battery when its voltage is low .
6. Remove the battery from the remote when you don't plan to use it for a long time.
7. When installing the fan, don't press the antenna (or other wires) with the fan's ceiling cover, or it could damage the wire and cause a short circuit or loss of control.
8. Ceiling fans with remote control system CAN NOT be operated in conjunction with any other control system EXCEPT a basic of On/Off wall switch if desired.

REPAIRING THE FAN'S RECEIVER & REMOTE

If the ceiling fan remote and receiver lose control after installation or during use, it is necessary to repair the pairing between them. Below are the symptoms and methods to repair the pairing:

Symptoms:

1. The fan only runs at high speed after installation.
2. No reverse function after installation.
3. Remote cannot communicate with the receiver.

To repair the pairing, follow these steps:

1. Turn OFF the main power to the ceiling fan for 30 seconds.
2. Press and hold the Pairing Button on the remote for 5 seconds until you hear 3 beeps within 60 seconds of switching the power ON to the receiver of the ceiling fan. Once the 3 beeps are heard, the pairing is successful.
3. Turn ON the fan and use the remote to change the speed to ensure that the operation and pairing were successful.

When installing multiple fans, each fan must be paired separately. Here are the steps to follow:

1. Turn OFF the main power to both fans for 30 seconds.
2. Press and hold the Pairing Button on the remote for 5 seconds within 60 seconds of switching the power ON to the receiver of the first fan (e.g. "Fan A"). When the 3 beeps are heard, the pairing is successful.
3. Turn OFF the main power to the first fan that was paired (e.g. "Fan A").
4. Press and hold the Pairing Button on another remote for 5 seconds within 60 seconds of switching the power ON to the receiver of the second fan (e.g. "Fan B"). When the 3 beeps are heard, the pairing is successful.

If you have multiple fans such as "Fan A" and "Fan B" and want to control both with a single remote, ensure that they are located within 10 meters / 32 feet of each other in the same room with no obstruction between them. Follow the steps below to pair the remote with both fans:

1. Turn OFF the main power to both "Fan A" and "Fan B" for 30 seconds.
2. Press and hold the Pairing Button on the remote for 5 seconds within 60 seconds of switching the power ON to the receiver of both "Fan A" and "Fan B". When you hear the 3 beeps, the pairing is successful.

OPERATING YOUR FAN

SUMMER Mode: The airflow will be directed downwards, for cooling in summer.

WINTER Mode: The airflow will be directed upwards assisting in the circulation of warm air, for energy conservation in winter.

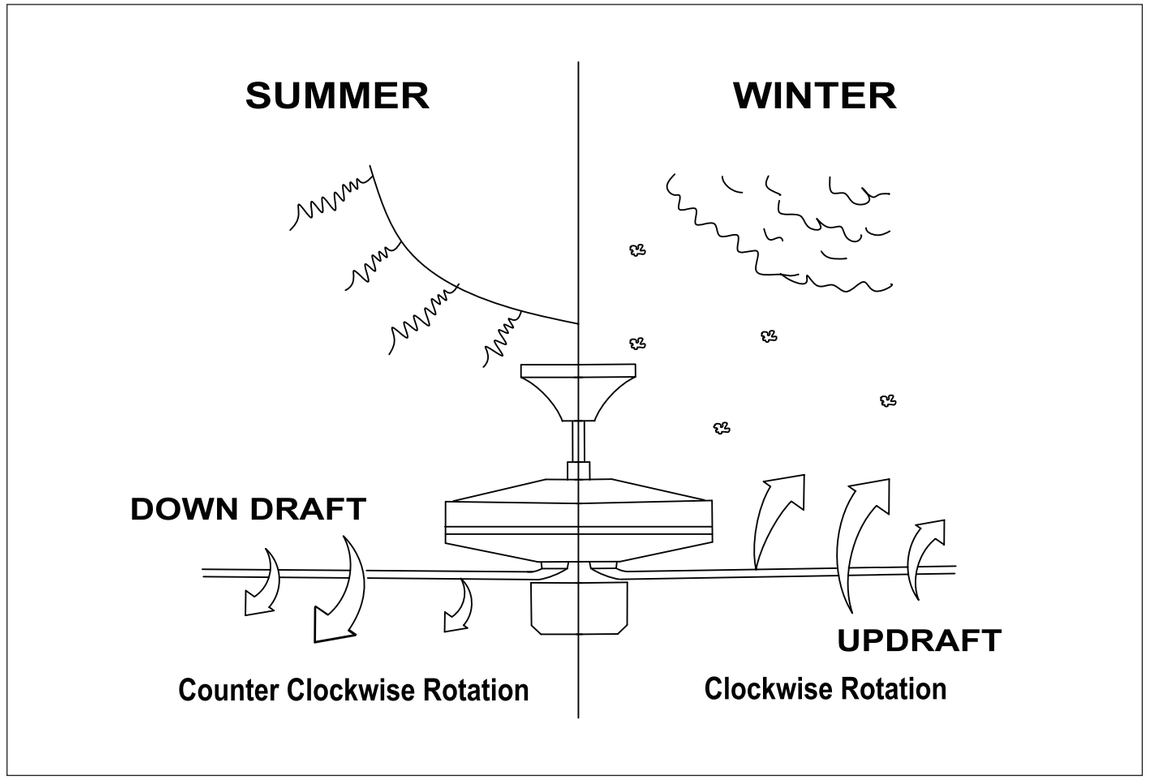

TROUBLESHOOTING

WARNING: Failure to disconnect power supply prior to troubleshooting any wiring issues may result in serious injury.

Problems	Solutions
Fan will not start.	- Check circuit fuses or breakers. - Ensure that the battery in the remote are installed properly and that they still have power. - Check all electrical connections to ensure proper contact. CAUTION: Make sure the main power is OFF when checking any electrical connection.
Fan sounds noisy.	- Make sure all.motor housing. screws are.snug. - Make sure the screws that attach the fan blade to the motor hub are tight. - Make sure wire nut connections are not rubbing against each other or the interior wall of the switch housing. - Allow a 24-hour "breaking-in" period. Most noise associated with a new fan disappear during this time. - If using an optional light kit, make sure the screws securing the glassware are tight. Check that light bulb is also secure. - Some fan motors are sensitive to signals from solid-state variablespeed controls. If you have installed this type of control, choose and install another type of control.- Make sure the upper canopy is a short distance from the ceiling. It should not touch the ceiling.
Fan wobbles.	- Check that all bladeand blade arm screws are secure. - Most fan wobbling problems are caused when blade levels are unequal. Check this level by selecting a point on the ceiling above the tip of one of the blades. Measure this distance. Rotate the fan until the next blade is positioned for measurement. Repeat for each blade. The distance deviation should beequal within 1/8". - Use the enclosed Blade Balancing Kit if the blade wobble is still noticeable. - If the blade wobble is still noticeable, interchanging two adjacent (side by side) blades can redistribute the weight and possibly result in smoother operation.
Light does not work.	- Check for loose or disconnected wires in fan switch housing. - Check.for loose or disconnected wires in light kit. - Remove light kit and check the plug connections if they are present. CAUTION: Make sure main power is turned off before entering switch housing and/or canopy.
Fan goes back and forth but does not start.	- Check all electrical connections to ensure proper contact. - If the wire connections of motor/light wire terminal are not in proper contact or broken, cut the broken terminal and connect again. CAUTION: Make sure the main power is OFF when checking any electrical connection.

CARE OF YOUR FAN

Here are some suggestions to help you maintain your fan.

1. Because of the fan's natural movement, some connections may become loose. Check the support connections, brackets, and blade attachments twice a year. Make sure they are secure. (It is not necessary to remove fan from ceiling.)
2. Clean your fan periodically to help maintain its new appearance over the year. CAUTION many common household cleaning products contain chemicals that could damage the finish of your fan. Use only a soft lint free cloth and soapy water.
3. If your fan is provided with wood veneer blades; you can apply a light coat of furniture polish for additional protection and enhanced beauty. Cover small scratches with a light application of shoe polish.
4. There is no need to oil your fan. The motor has permanently lubricated bearings.