ASSEMBLY INSTRUCTION FOR

JEMSON GRAND DINING TABLE

Hardware List				
A		Hexa Bolt	8x40mm	08
B		Washer	8x25mm	24
C		Spanner	13 NO	01
D		Allen Bolt	8x16mm	16
E		Allen Key	5mm	01
F	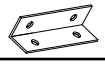	L-Patti		04

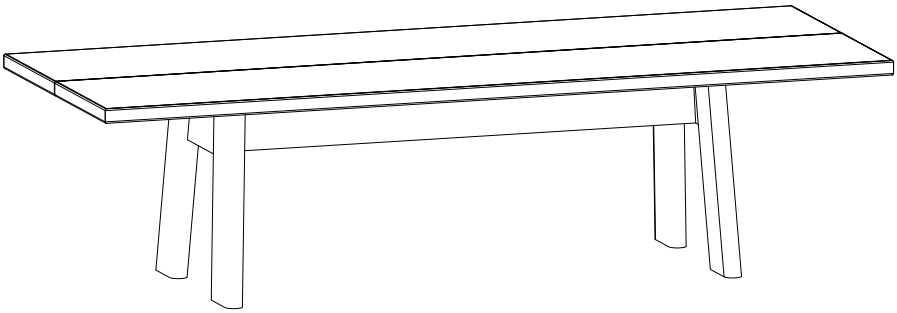

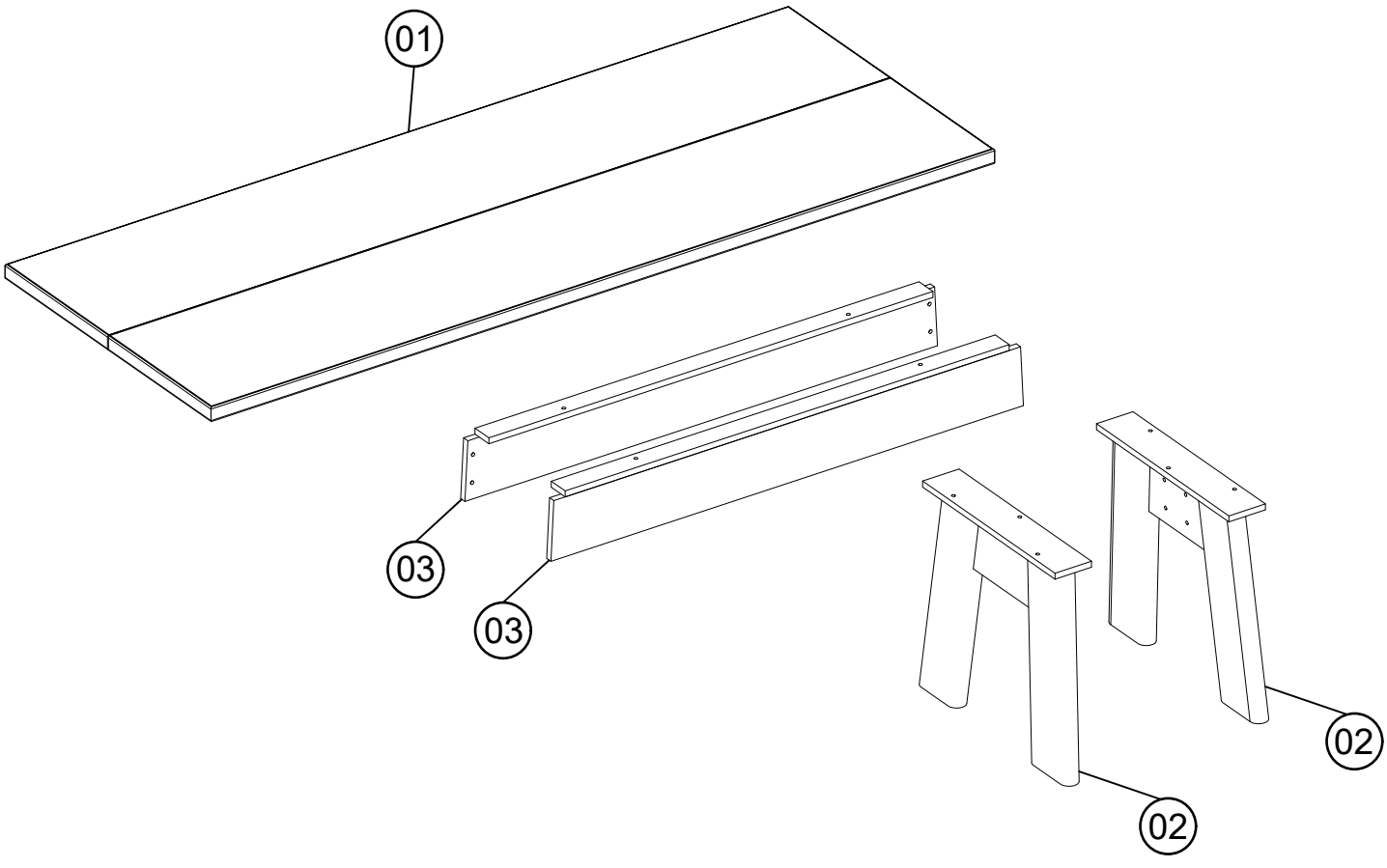

Made In India

Step 1

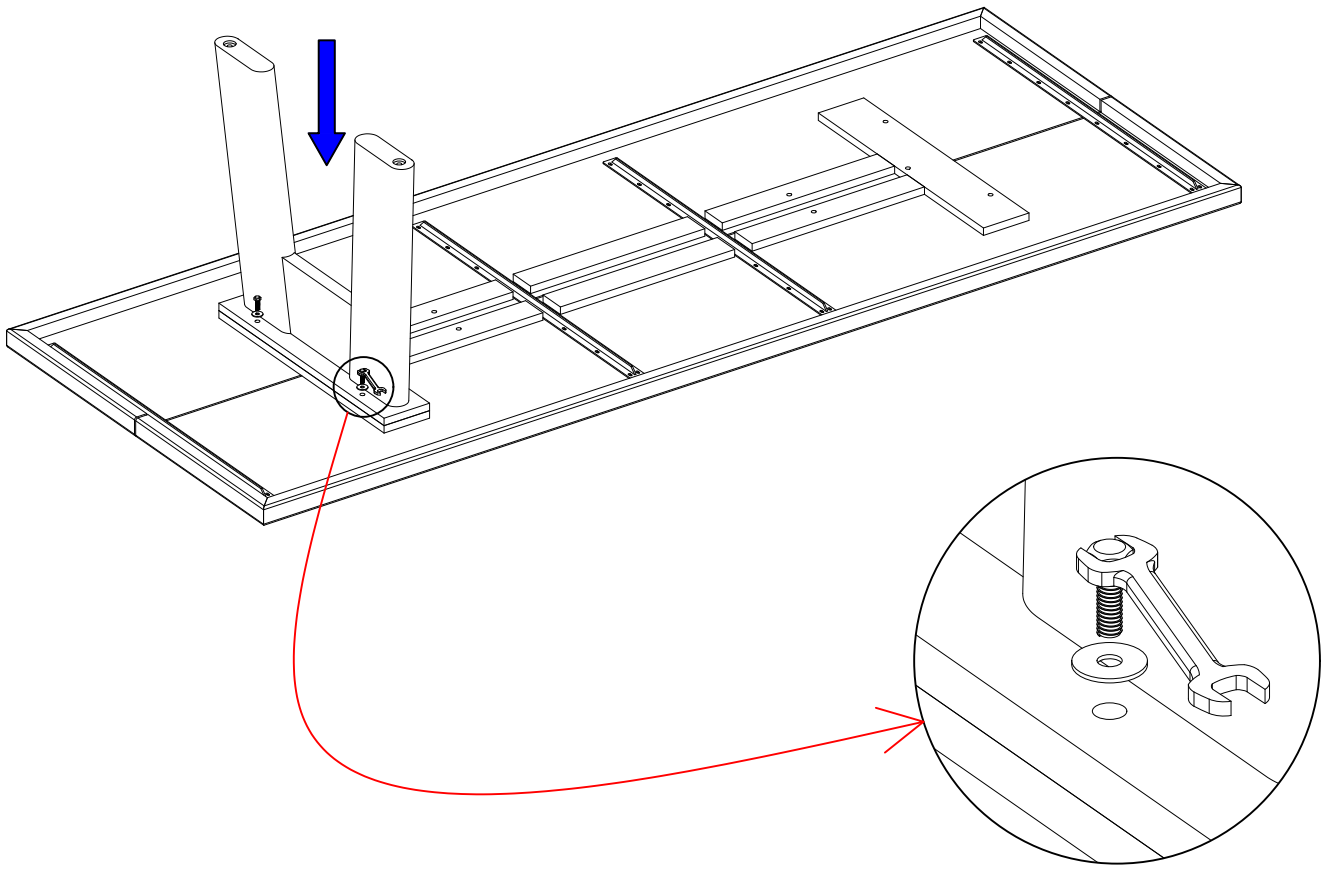

Step 2

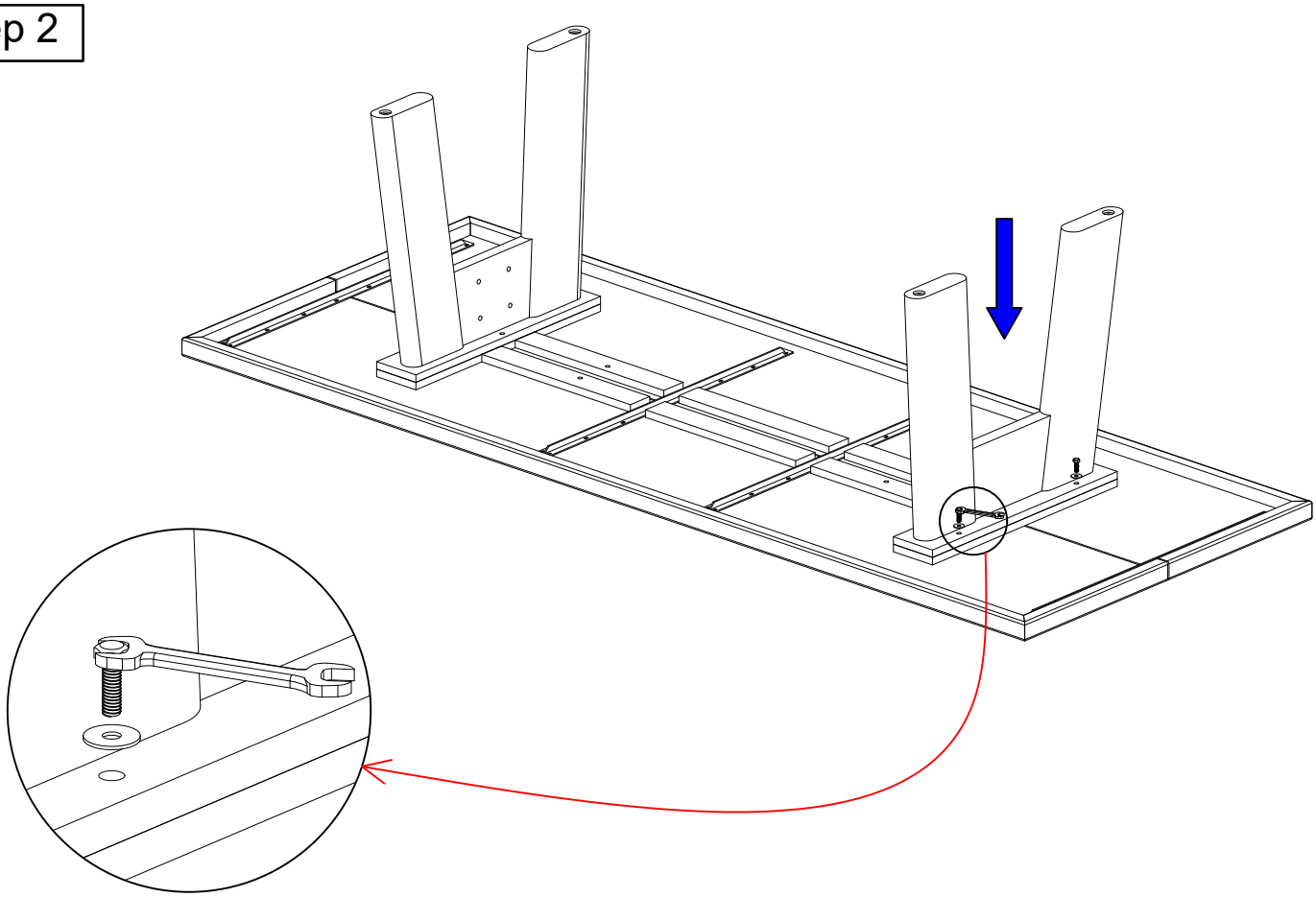

Step 3

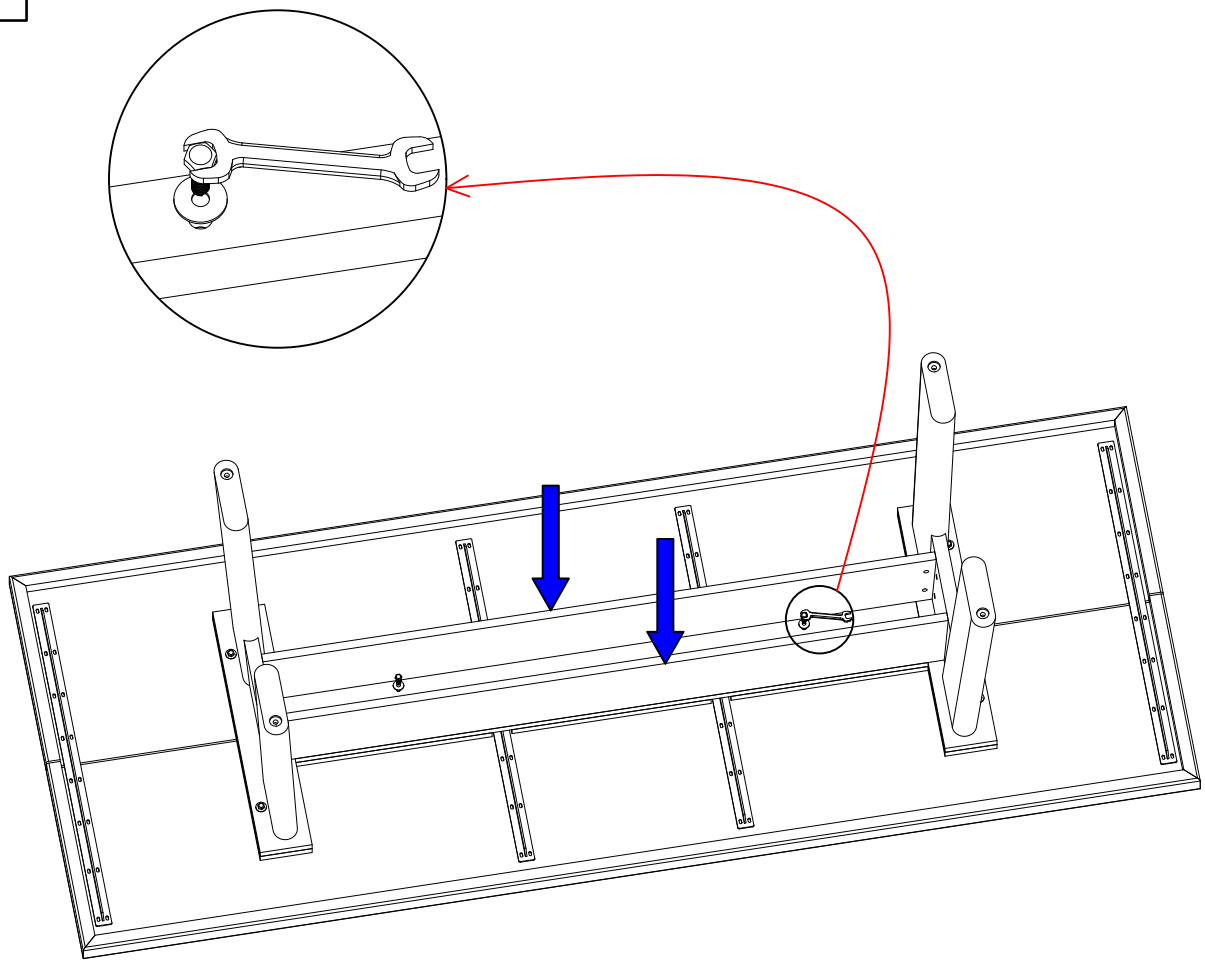

Step 4

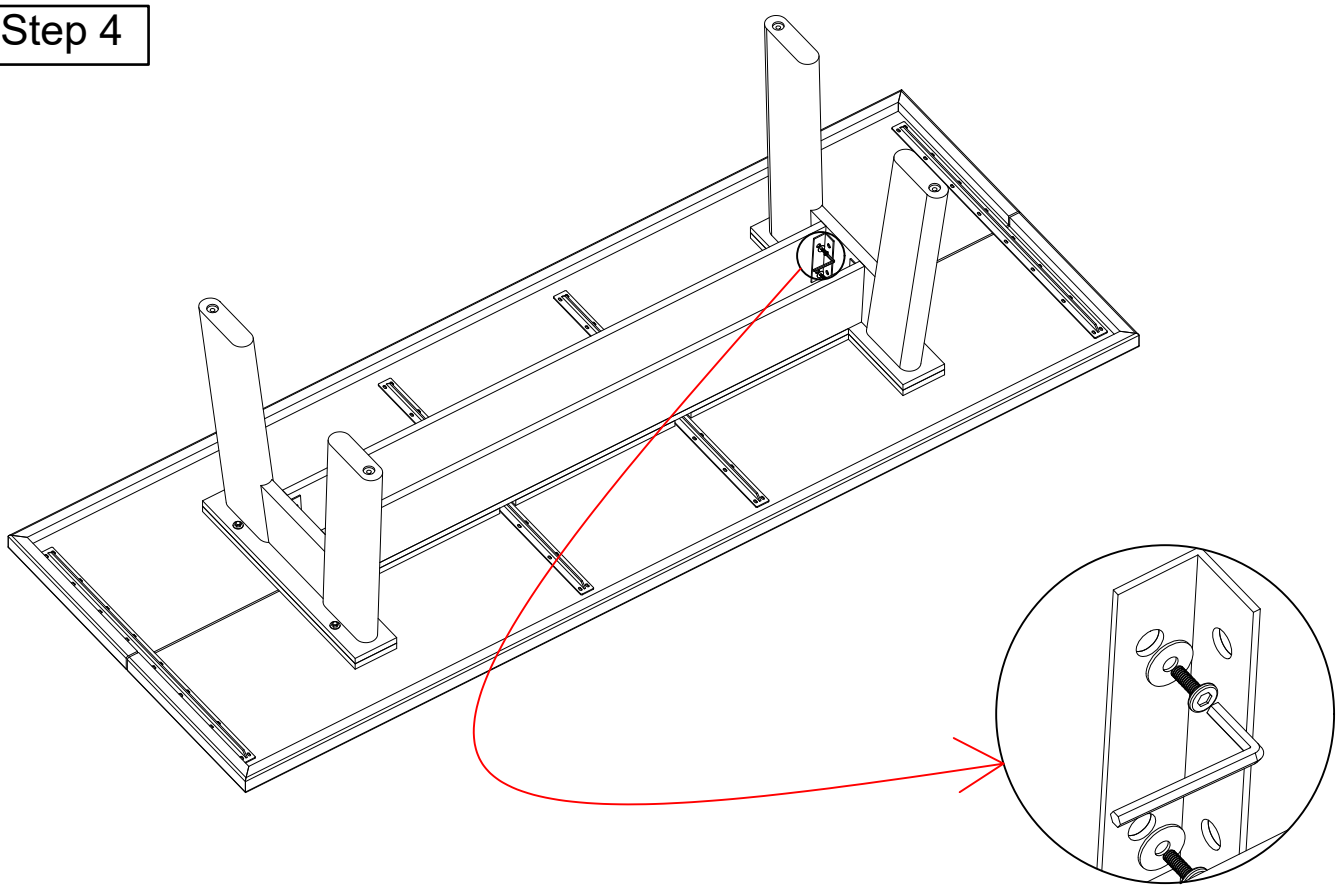

Step 5

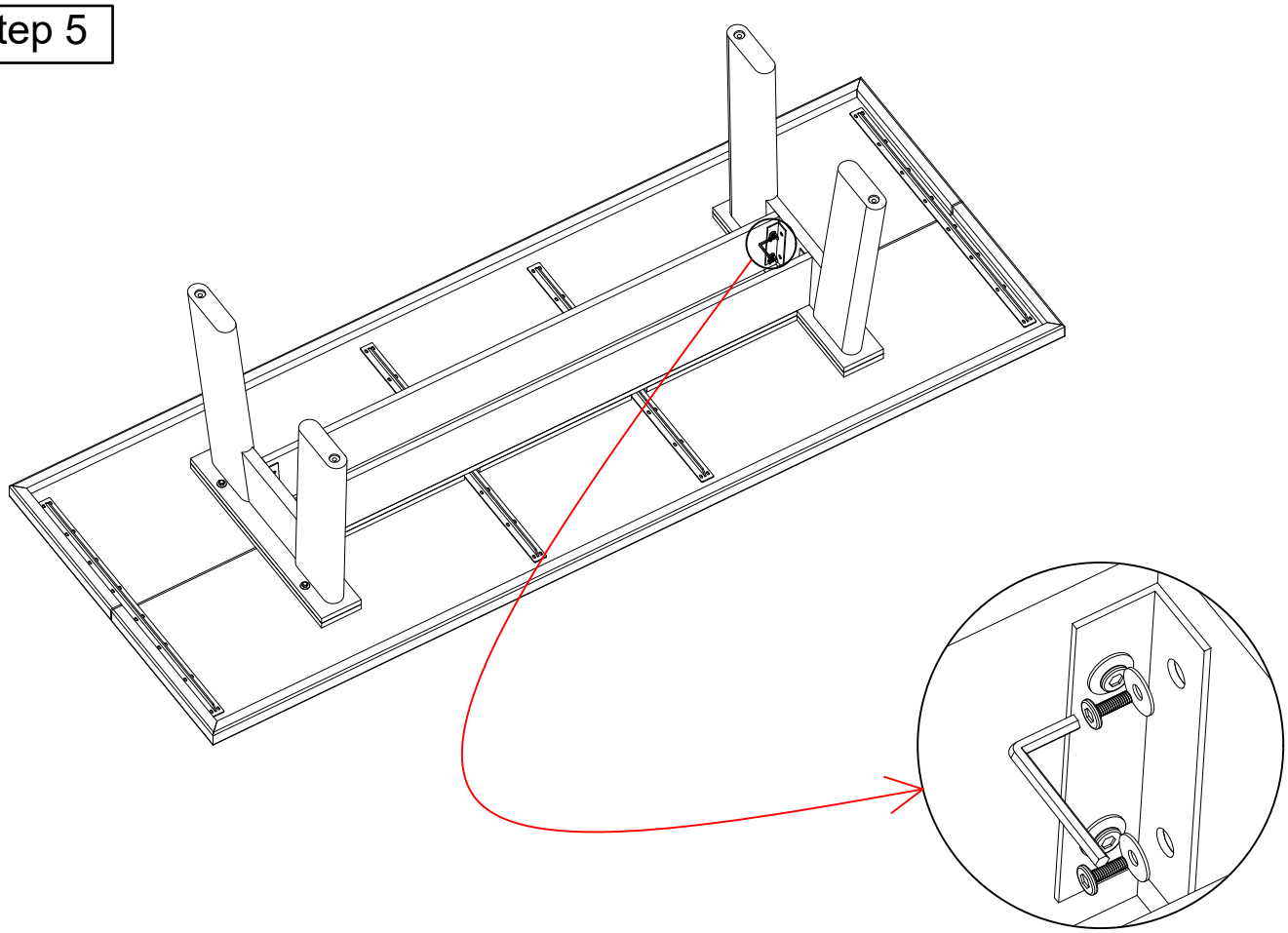

Step 6

