Sideboard

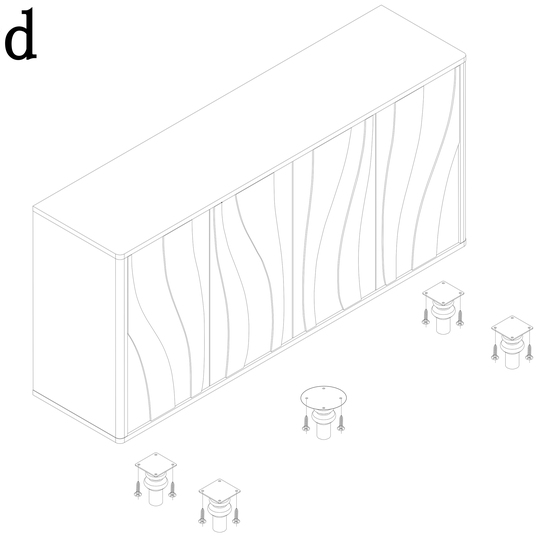

1 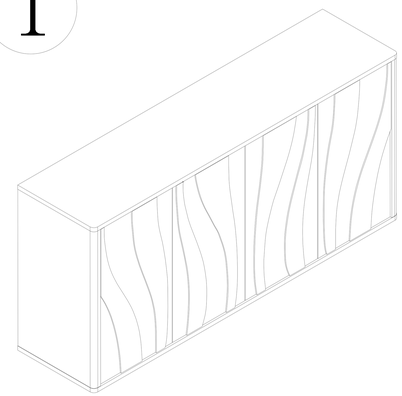 Pre-Assembled Sideboard	2 Legs x 4	3 Support Leg x1
C Screwdriver x 1 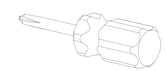	A Selftapping Screws Ø3.5*20=20	B Foot Spike Ø6*20=1

Step 1: Please tighten up the screws as picture shows

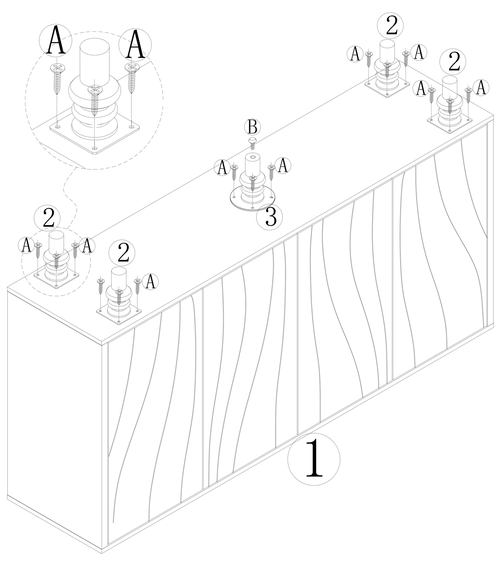
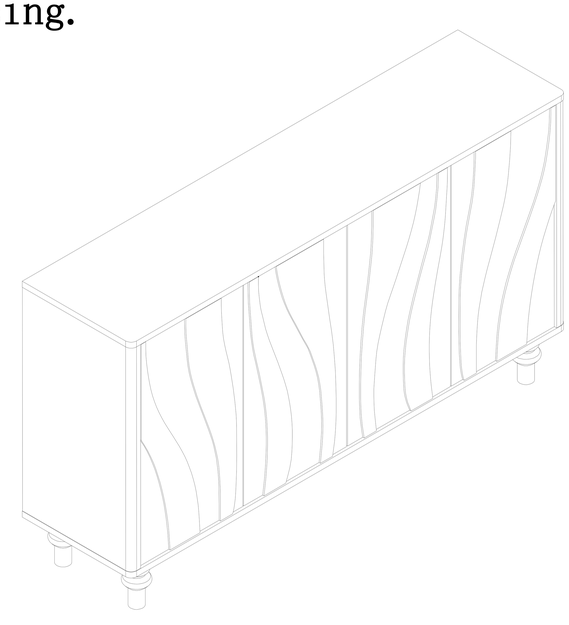
Please make sure all the screws are tighten up before using.