Coffee Pod Holder Instructions

Accessories List

A	B	C	D	E	F	G
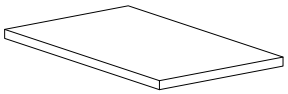	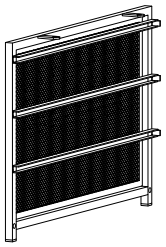	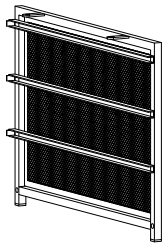	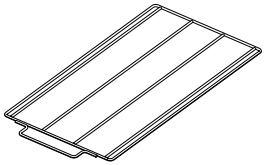			
X1	X1	X1	X3	X6	X4	X4

H	I	J
		
X2	X1	X4

STEP 1

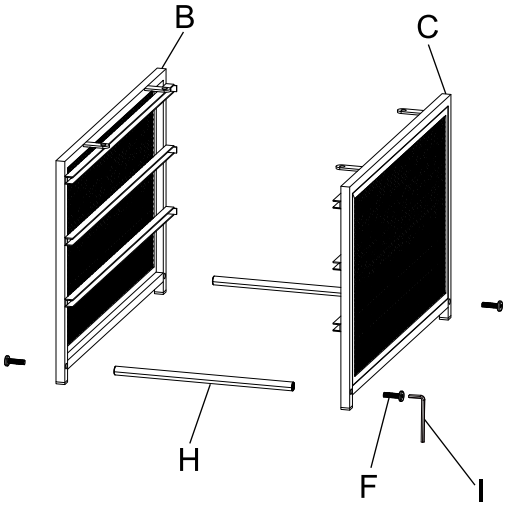

STEP 2

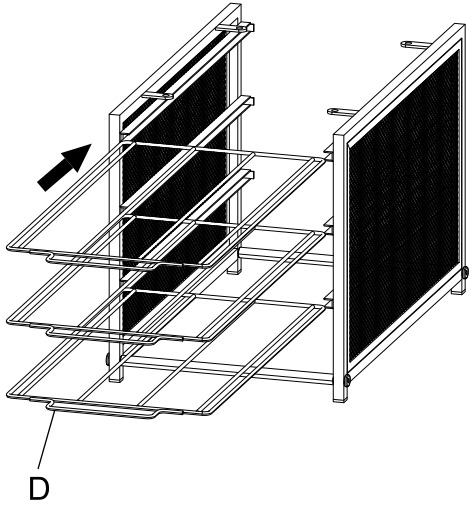

STEP 3

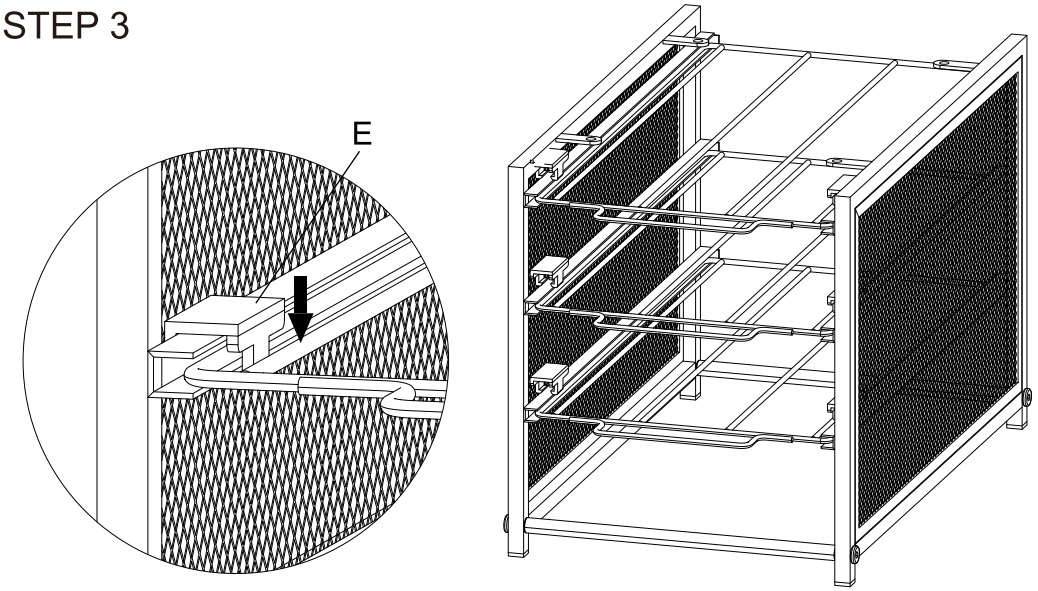

STEP 4

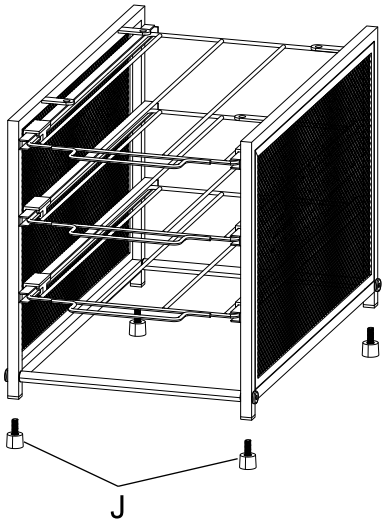

STEP 5

Flip the coffee pod holder over and pull the iron frame out

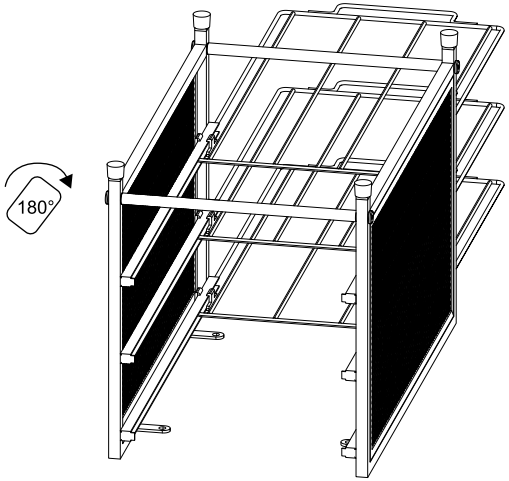

STEP 6

