

① light fixture 1pcs

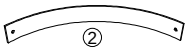

② curve metal profile 6pcs

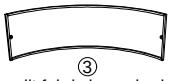

③ split fabric lampshade 3pcs

④ hanging tube 1pcs

⑤ grub screw 2pcs

⑥ hex key 1pcs

⑦ short screw 6pcs

⑧ end cap 12pcs

⑨ long screw 12pcs

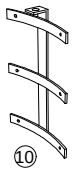

⑩ metal frame 3pcs

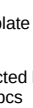

⑪ lock nut and teeth lock washer 1pcs

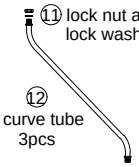

⑫ curve tube 3pcs

⑬ plastic washer 1pcs

⑭ end cap 1pcs

⑮ hanging ring 1pcs

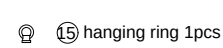

⑯ cover plate 1pcs



⑰ connected box 1pcs

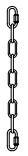

⑱ chain 1pcs

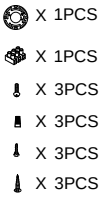

X 1PCS
X 1PCS
X 3PCS
X 3PCS
X 3PCS
X 3PCS

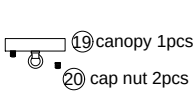

⑲ canopy 1pcs
⑳ cap nut 2pcs

㉓ cylinder tube 6pcs

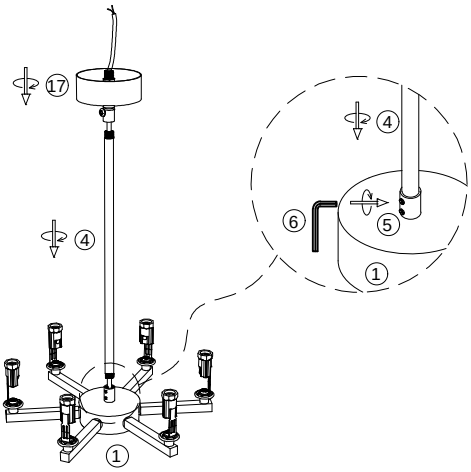

1.Let the wire go through the hanging tube ④ and box ⑰, rotate to install all parts together, fasten the tube ④ with grub screw ⑤ by rotate hex key ⑥.

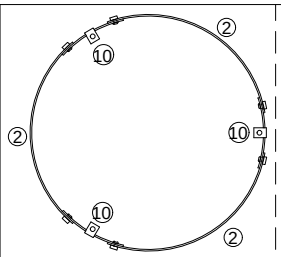

Profile ② should be install at the side hole of metal frame ⑩.

Don't tighten the screw and end cap at this step.

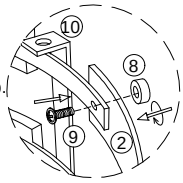

how to install the profile ② to the frame ⑩.

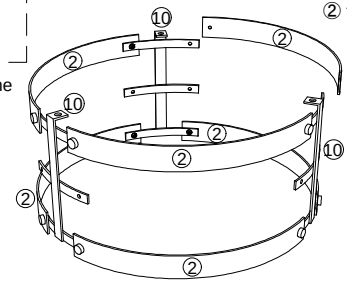

⑨ long screw

2.Install the profile ② to the metal frame ⑩ with long screw ⑨ and end cap ⑧, please don't tighten the screw ⑨ at this step.

don't tighten the screw ⑥ until all screws are in the hole.

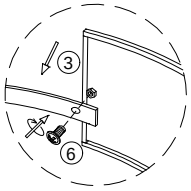

how to install the fabric to the metal frame.

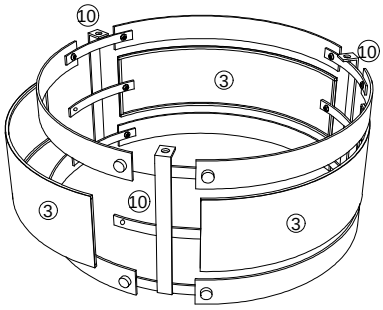

⑦ short screw

3.Install the fabric lampshade to the metal frame with short screw ⑥, please don't tighten the screw ⑥ until all lampshades are ready to the frame, rotate to fasten all screws ⑥ and screw ⑨ at last.

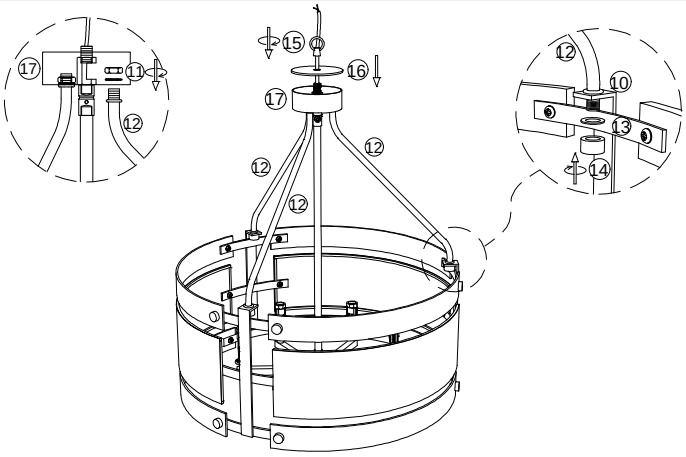

4.Install the curve tube ⑫ to the lampshade with plastic washer ⑬ and end cap ⑭, install the lampshade to the fixture with lock nut and teeth lock washer ⑪.
5.Let the wire go through the cover plate ⑯ and hanging ring ⑮, rotate ring ⑮ to fasten the plate ⑯ to the fixture.

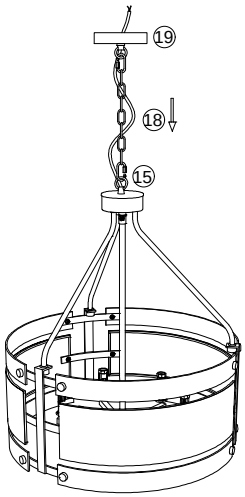

6.Hang the fixture to the canopy ⑲ with chain ⑱, let the wire go through the chain ⑱ and canopy ⑲.

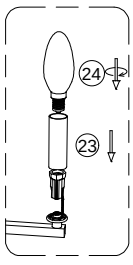

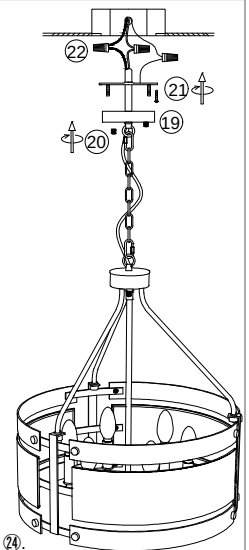

7.Install the bracket to the ceiling junction box with screw ㉑.
8.Connect the wire to your home line with cap connector ㉒.
9.Install the fixture to the bracket with cap nut ⑳.
10.Put the cyliner tube ㉓ on top of bulb holder and install the bulb ㉔.

Please read carefully before installation!!!
Note : Please make sure that the electricity is powered off during installation !
Only a professional electrician should install this kind of product !