A	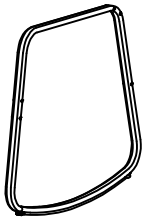	4
B	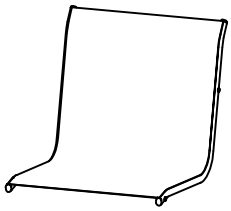	2
C		2
D	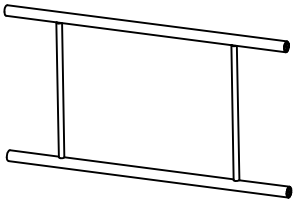	2
E		2
F		4
M	 M4*12	8
P	 M6*45	20
Q	 M6	20
S		12
U	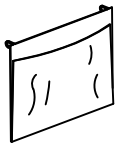	2

Step 1

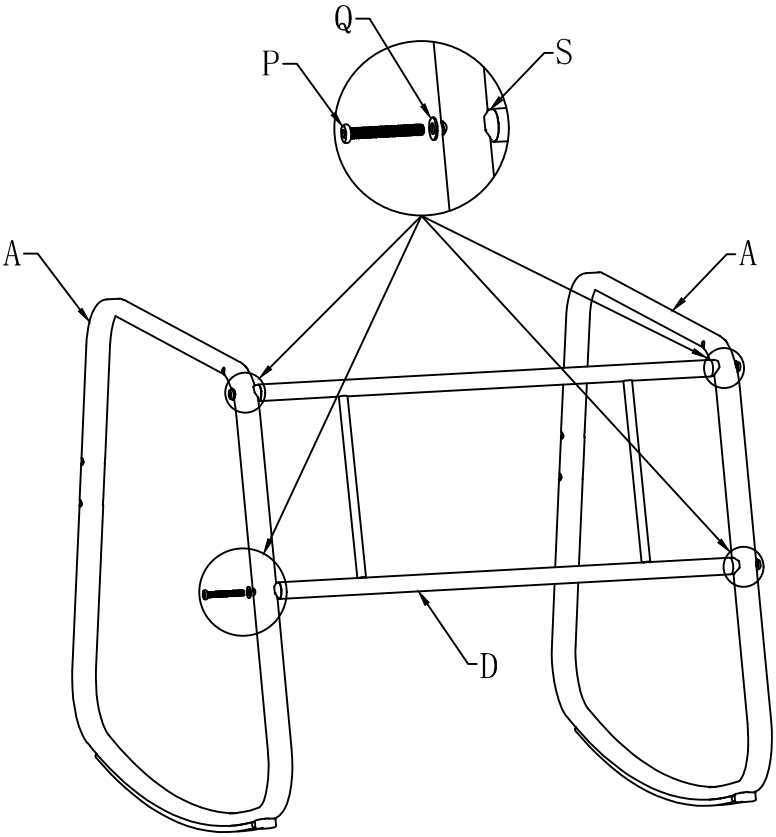

Step 2

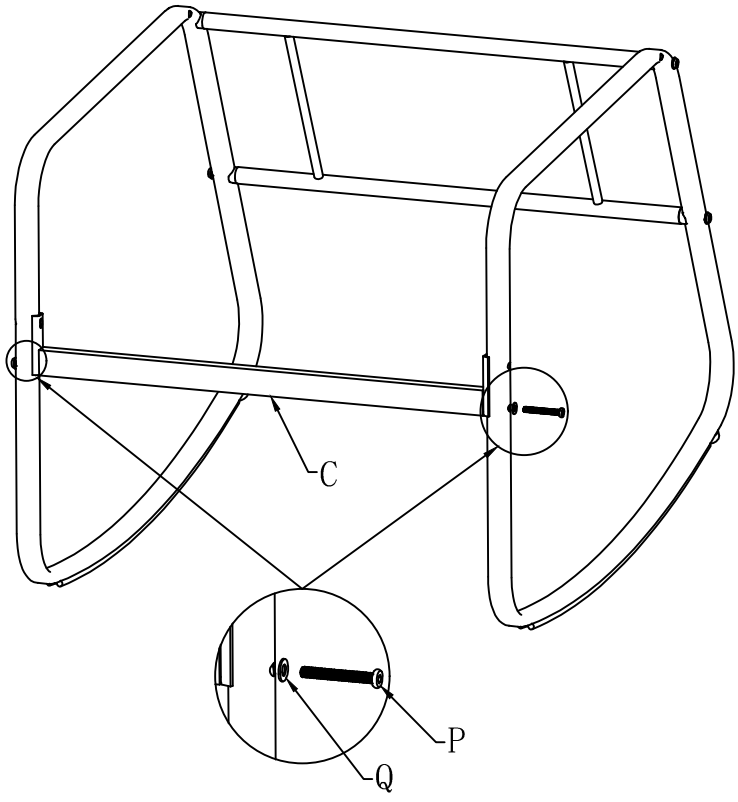

Step 3

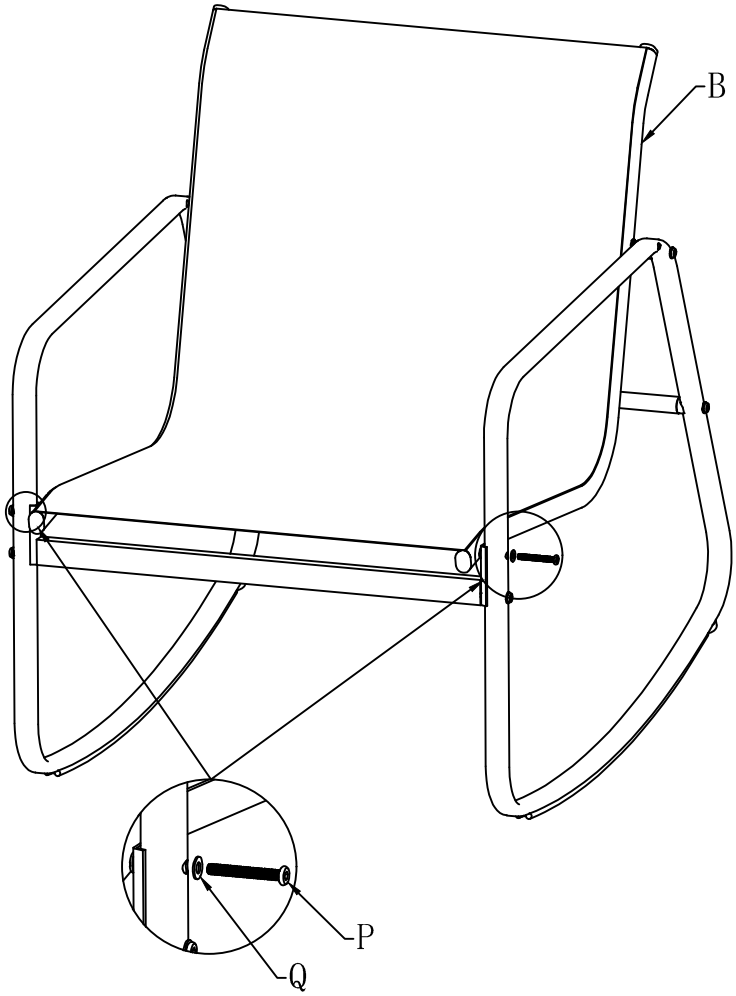

Step 4

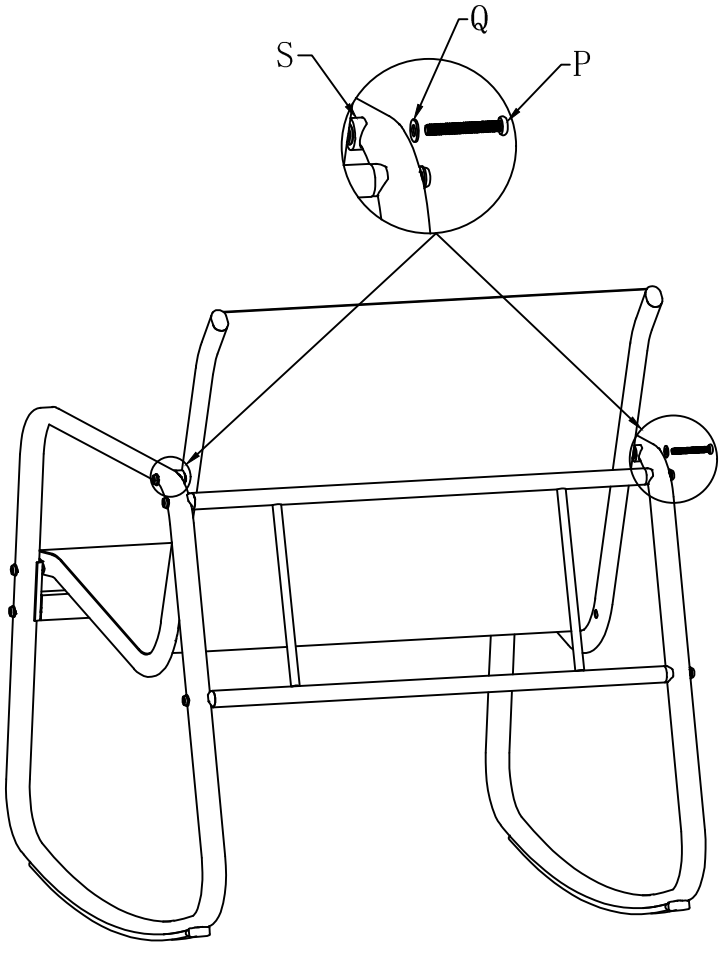

Step 5

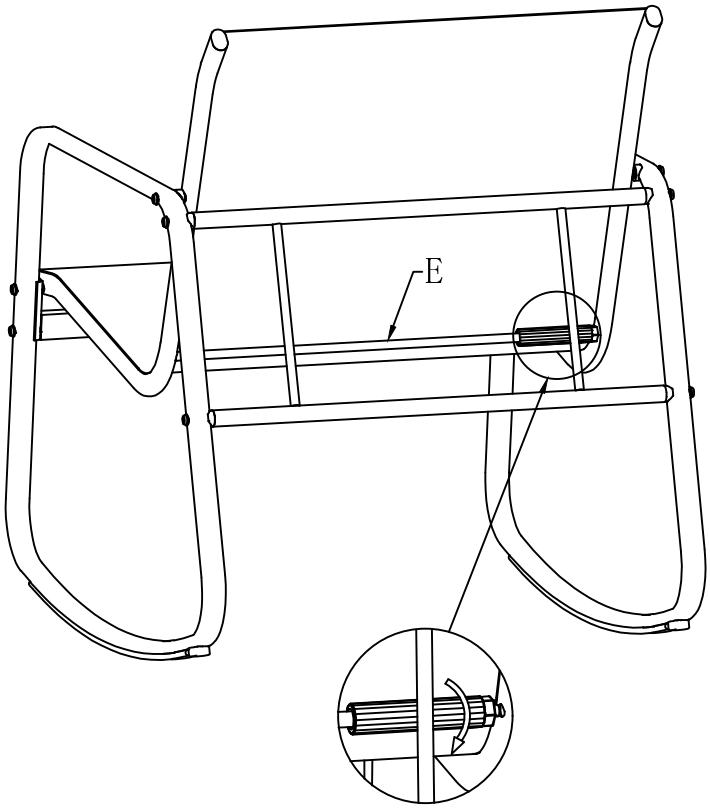

Step 6

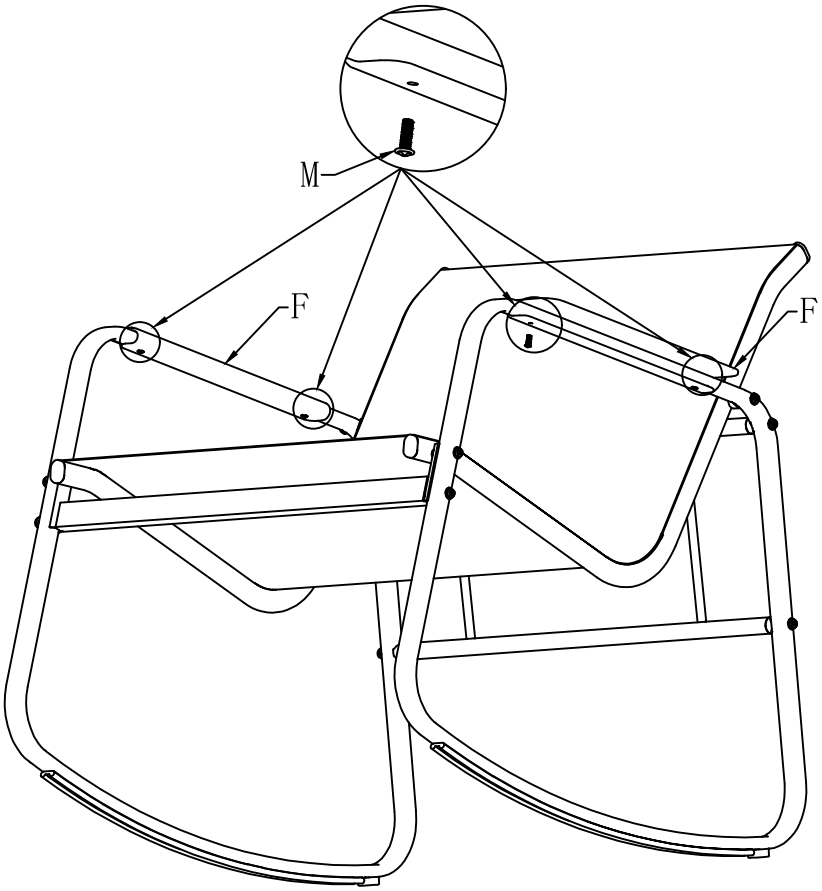

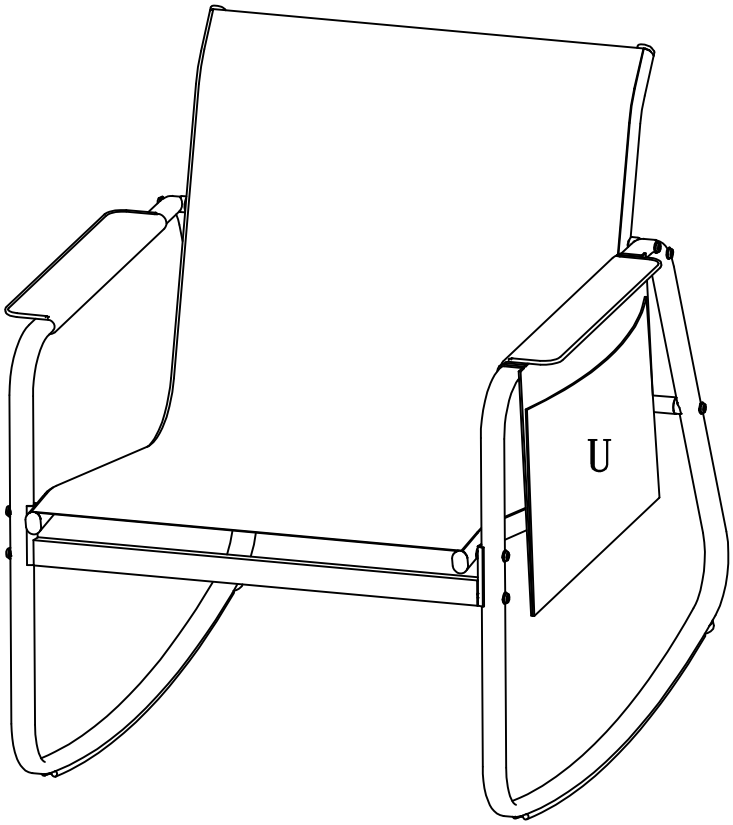
U

G	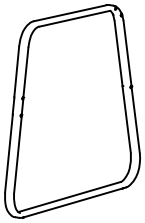	2
H	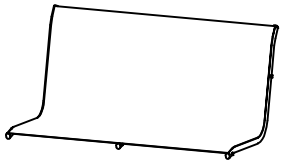	1
I		1
J	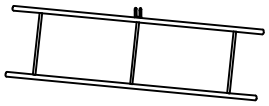	1
E		2
F		2
M	 M4*12	4
O	 M6*32	2
P	 M6*45	10
Q	 M6	14
R	 M6	2
S		6
T		4
U	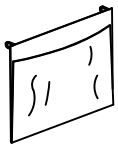	1

Step 1

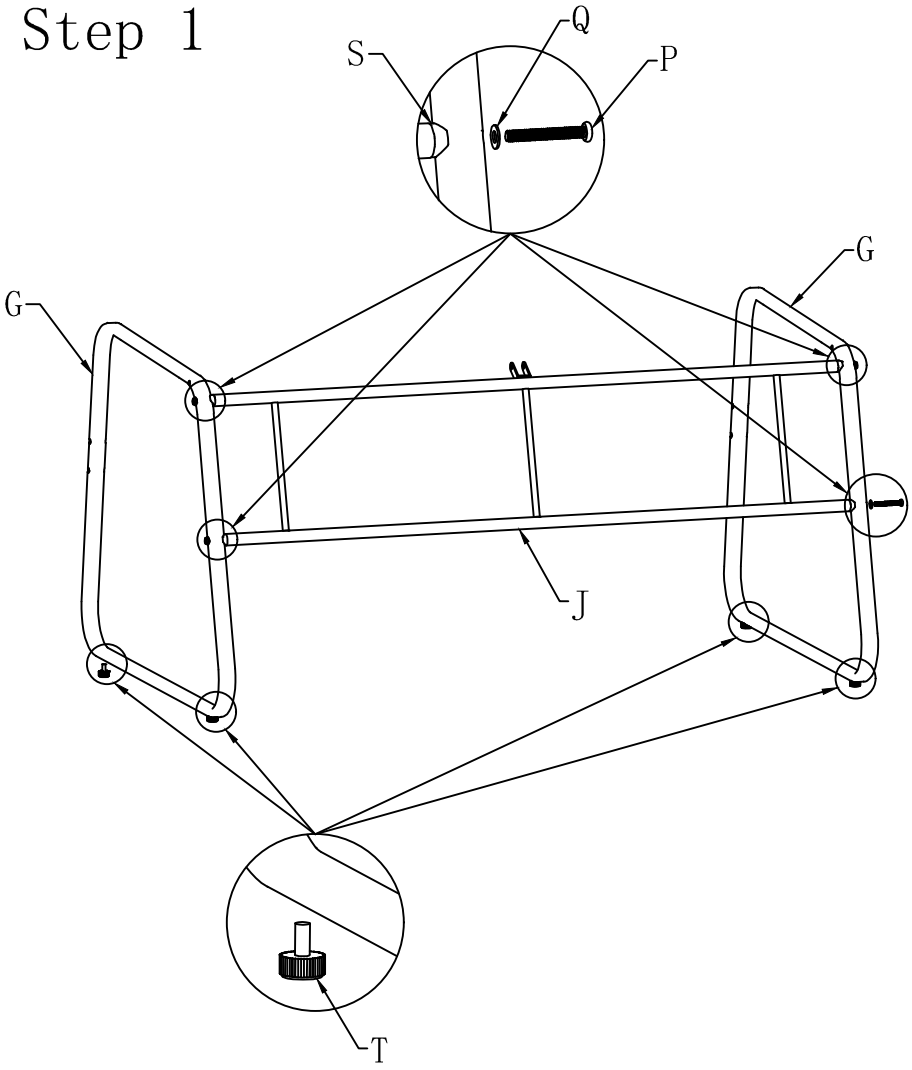

Step 2

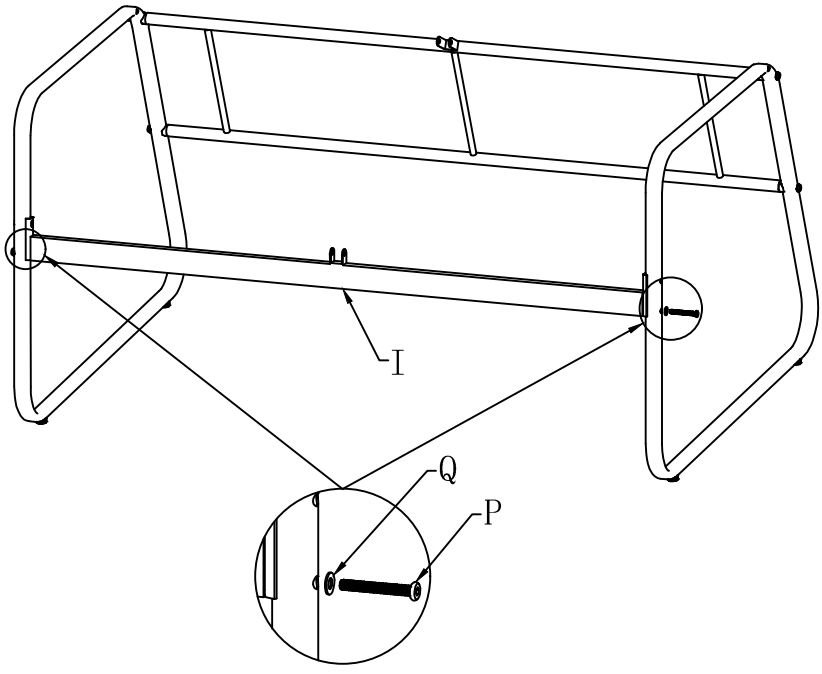

Step 3

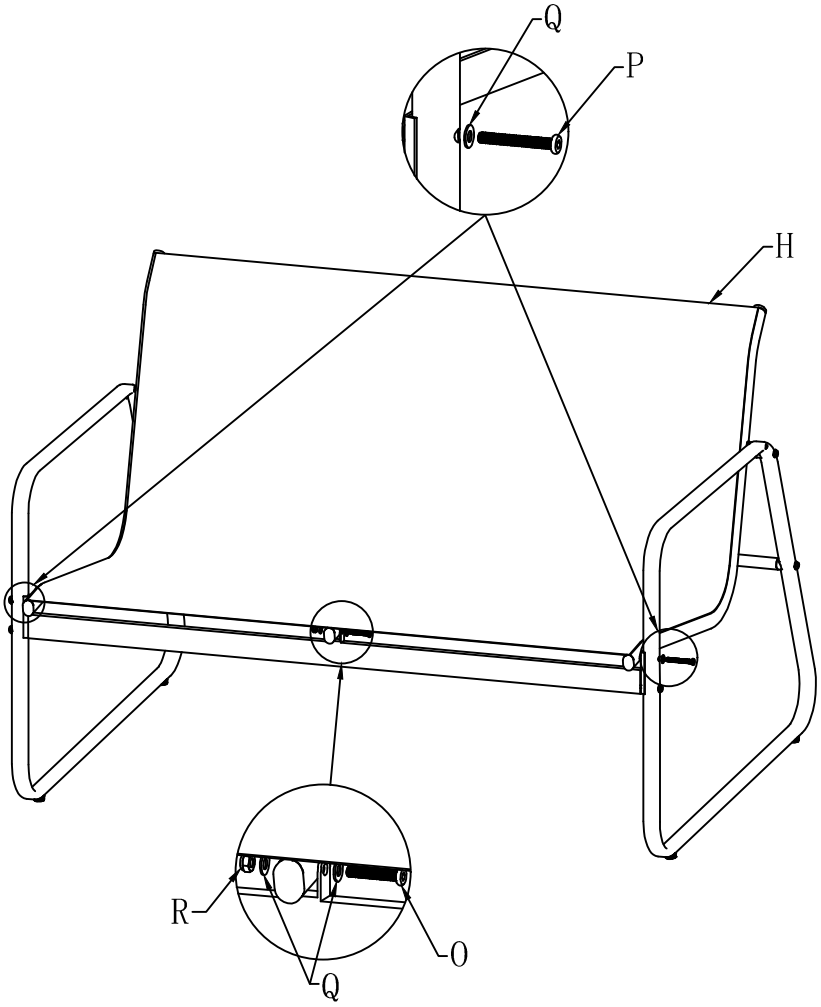

Step 4

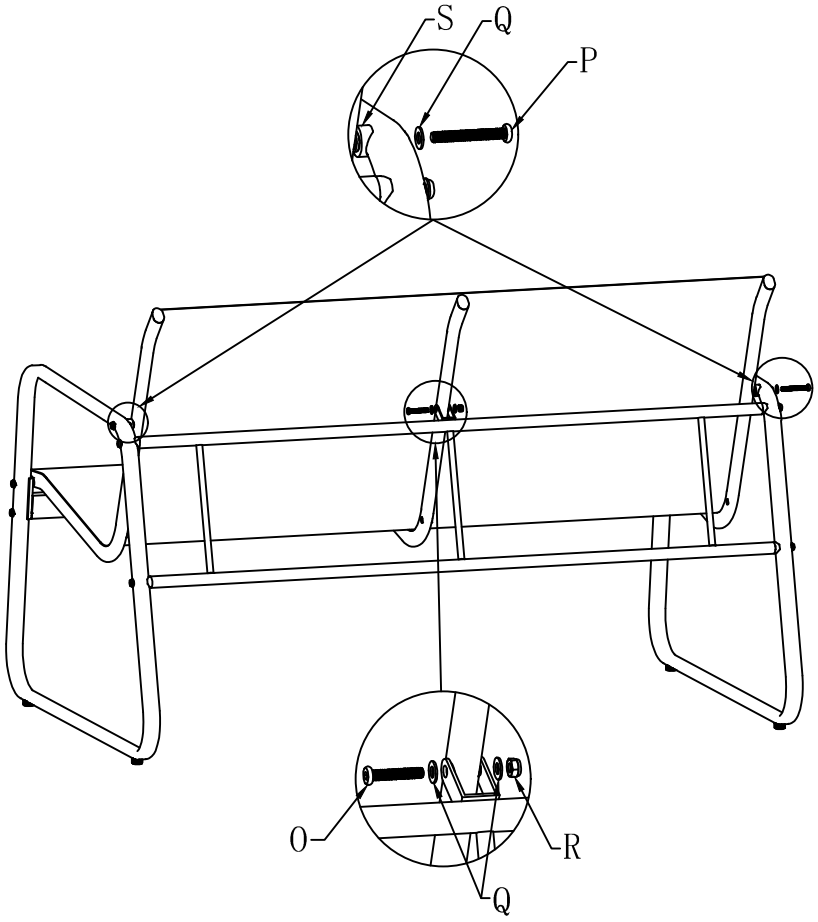

Step 5

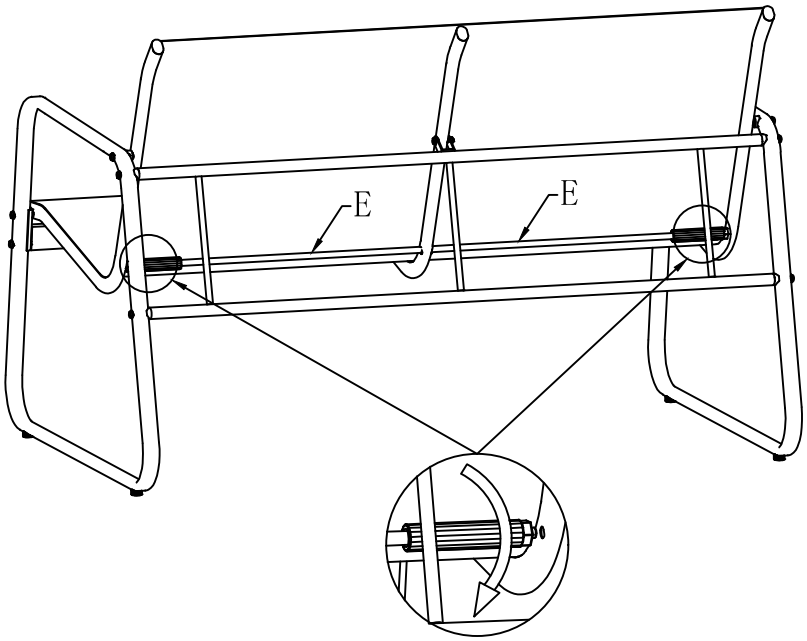

Step 6

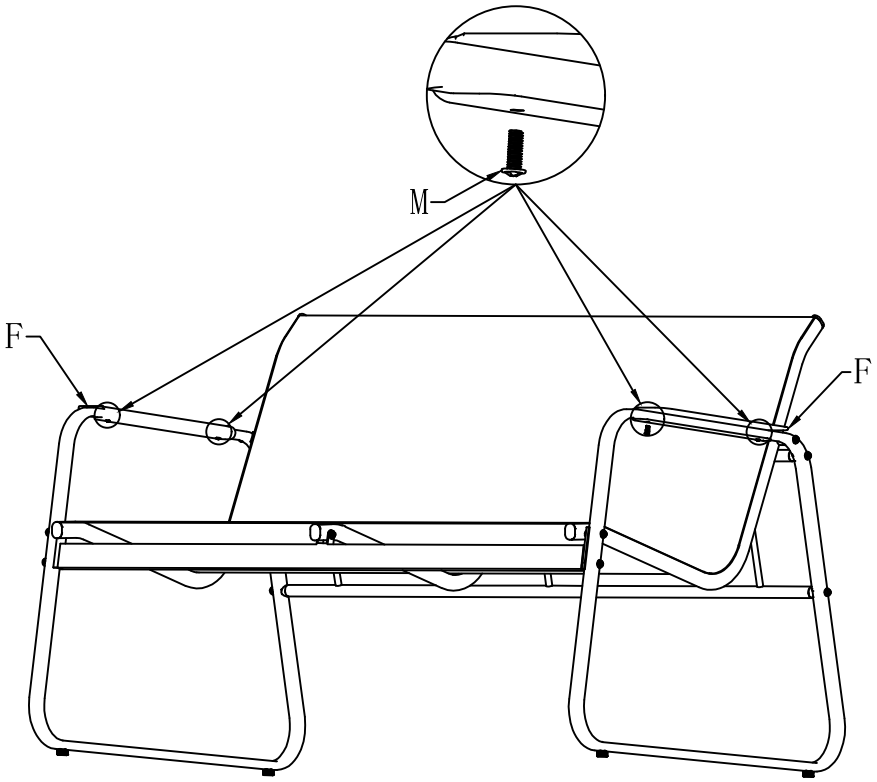

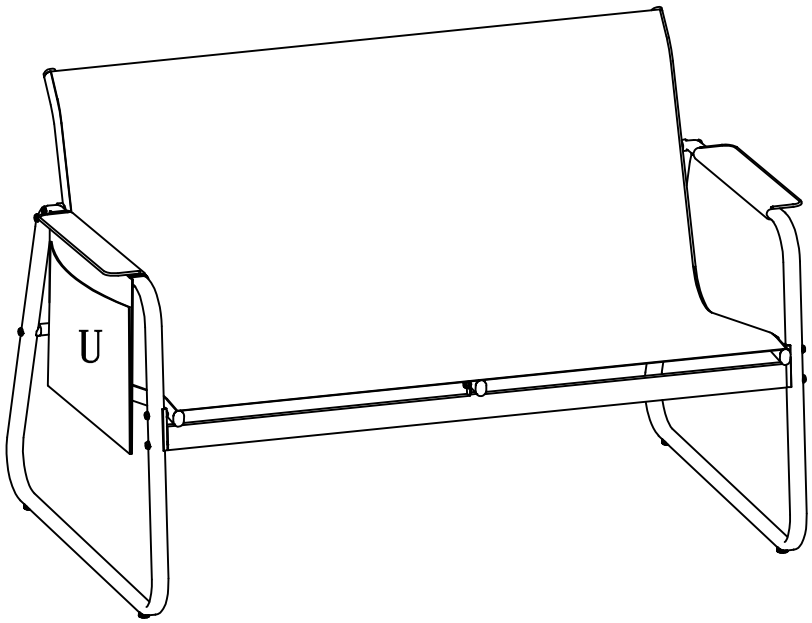
U

K	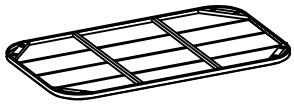	1
L	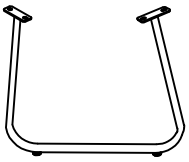	2
N	 M6*12	8
Q	 M6	8
V	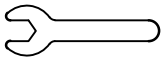	1
W		1

Step 1

