ASSEMBLY INSTRUCTION

Thank you for purchasing this quality product. Be sure to check all packing material carefully for small parts which may have come loose inside the carton during shipment. Separate, identify and count all parts and hardware. Compare with the parts list to be sure all parts are present.

IMPORTANT : PLEASE READ INSTRUCTION BEFORE STARTING THE ASSEMBLY.

"DO NOT TIGHTEN SCREWS UNTIL COMPLETELY ASSEMBLED"

"DO NOT OVERTIGHT ANY HARDWARE"

WARNING : SMALL PARTS AND HARDWARE NOT FOR CHILDREN UNDER 3 YEARS. ADULT ASSEMBLY REQUIRED.

TABLE OF CONTENTS

HARDWARES LIST	PAGE 2 - 3
PARTS LIST	PAGE 3 - 4
PARTS' LOCATION	PAGE 5
ASSEMBLY STEPS	PAGE 6 - 18
ASSEMBLY COMPLETED	PAGE 19

ASSEMBLY TOOLS REQUIRED

1. Screwdriver (not provide)

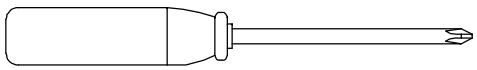

2. Hammer (not provide)

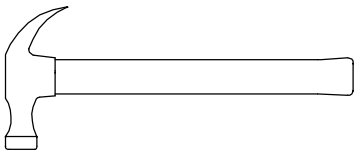

Skip the power trip this time.

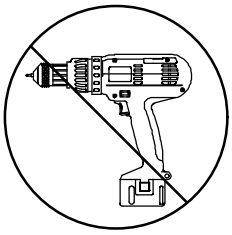

HARDWARES LIST

ITEM	DESCRIPTION	DRAWING	QTY
A	MINIFIX CAM LOCK		32 PCS
B	MINIFIX CAM BOLT	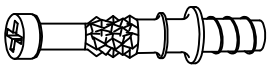	32 PCS
C	WOOD DOWEL (M8 x 25MM)		16 PCS
D	WOOD DOWEL (M6 x 25MM)	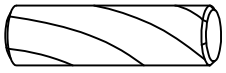	16 PCS
E	TRUSS M-SCREW (20MM)	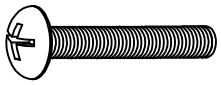	2 PCS
F	HANDLE (i)	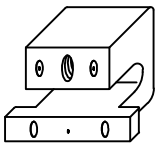	2 PCS
G	HANDLE (ii)	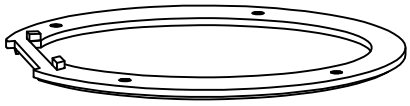	2 PCS
H	6/8" NAIL	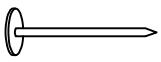	16 PCS
I	PLASTIC STRIP (H SHAPE)		1 PC

HARDWARES LIST

ITEM	DESCRIPTION	DRAWING	QTY
J	LEFT DRAWER SLIDE	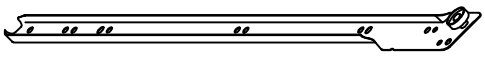	2 PCS
K	RIGHT DRAWER SLIDE	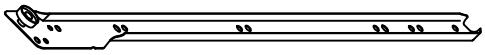	2 PCS
L	CSK SCREW M3 x 10mm		16 PCS

PARTS LIST

ITEM	DESCRIPTION	DRAWING	QTY
N1	TOP PANEL	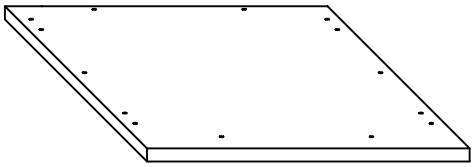	1 PC
N2	LEFT PANEL	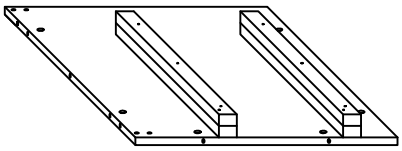	1 PC
N3	RIGHT PANEL	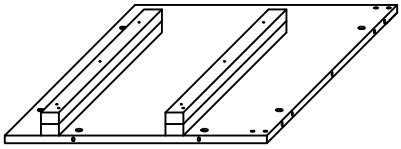	1 PC
N4	TOP SUPPORT RAIL	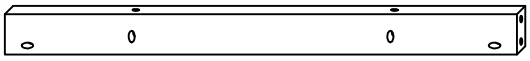	2 PCS
N5	SIDE FRAME	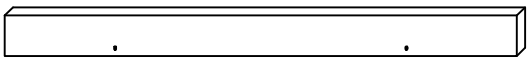	2 PCS

PARTS LIST

ITEM	DESCRIPTION	DRAWING	QTY
N6	BACK PANEL		2 PCS
N7	DRAWER HEAD	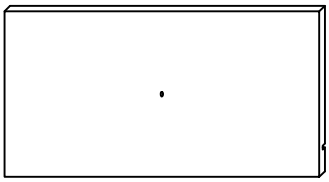	2 PCS
N8	DRAWER BACK PANEL	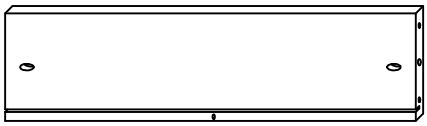	2 PCS
N9	DRAWER BOTTOM PANEL	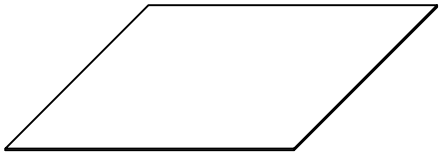	2 PCS
N10	BOTTOM PANEL	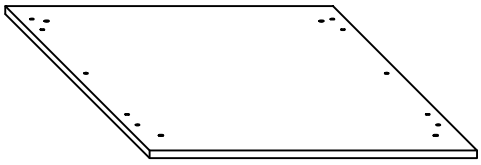	1 PC
19	DRAWER LEFT PANEL	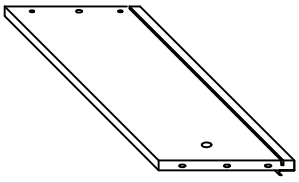	2 PCS
20	DRAWER RIGHT PANEL	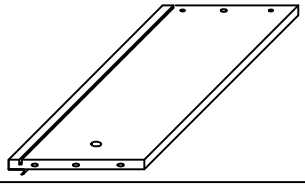	2 PCS
21	DRAWER BOTTOM SUPPORT RAIL	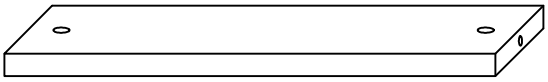	2 PCS
22	SUPPORT LEG		4 PCS

PARTS ' LOCATION

NIGHTSTAND x 1 PC

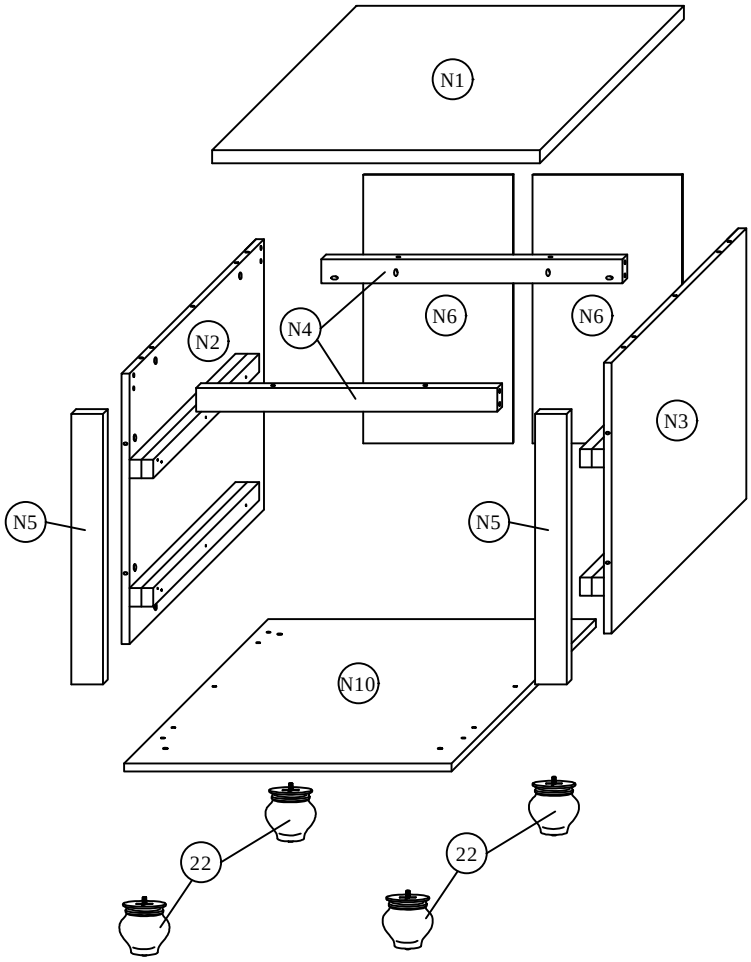

DRAWER x 2 PCS

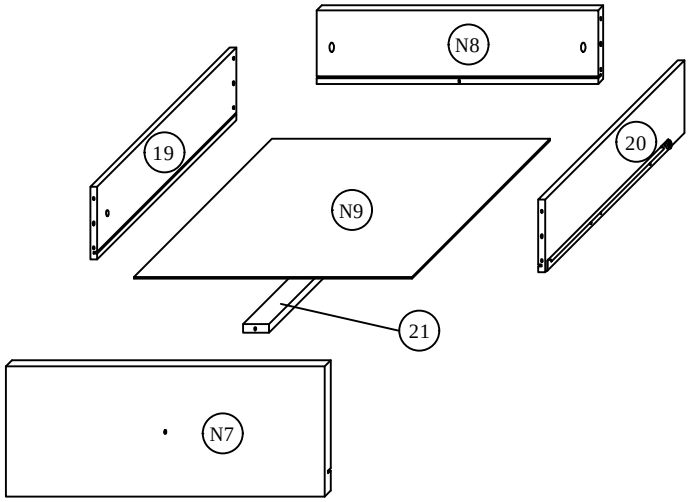

ASSEMBLY STEPS

STEP 1

Insert 4 pieces (A) and 2 pieces (C) to the (N4) as shown.This step needs to be **done twice**.

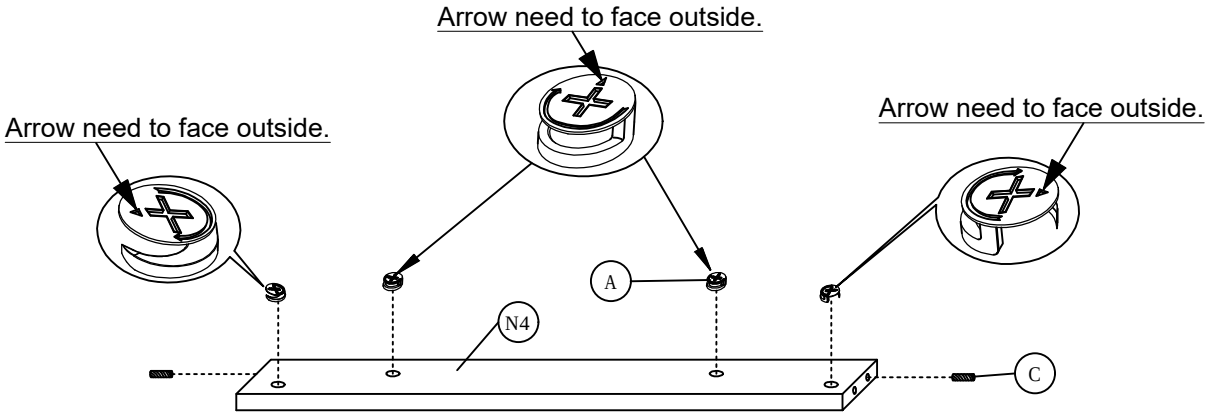

Assembled looks

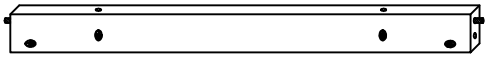

STEP 2

Insert 2 pieces (B) to the (N5) as shown.This step needs to be **done twice**.

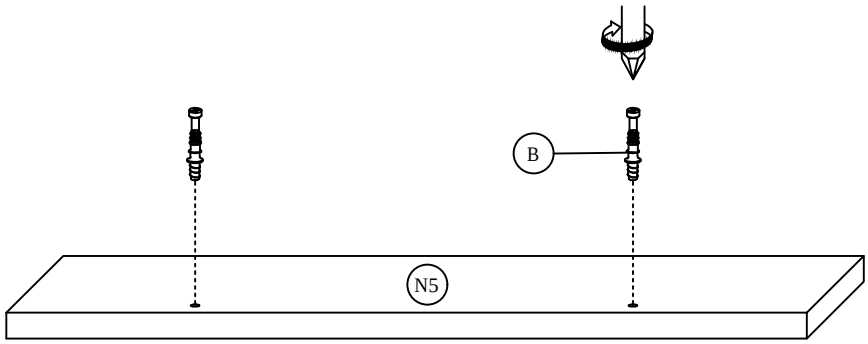

Assembled looks

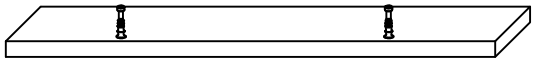

STEP 3

Fix the 2 pieces (J) to the (N2) by using 8 pieces (L).Then insert 6 pieces (A) and 2 pieces (B). Combine (N5) to (N2) then tighten the 2 pieces (A)-(pre insert in previous step) as shown.

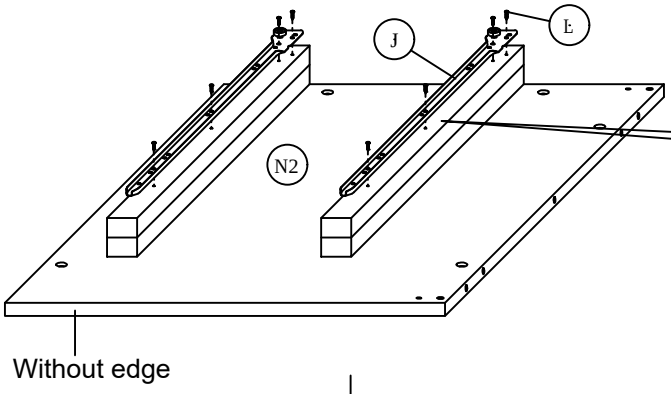

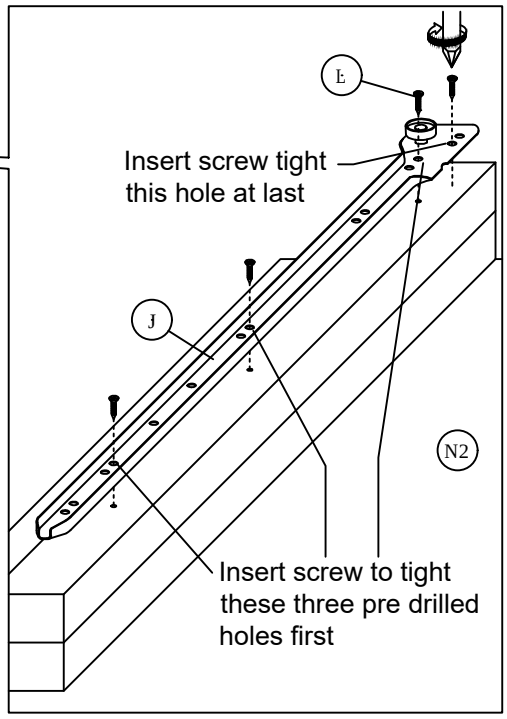

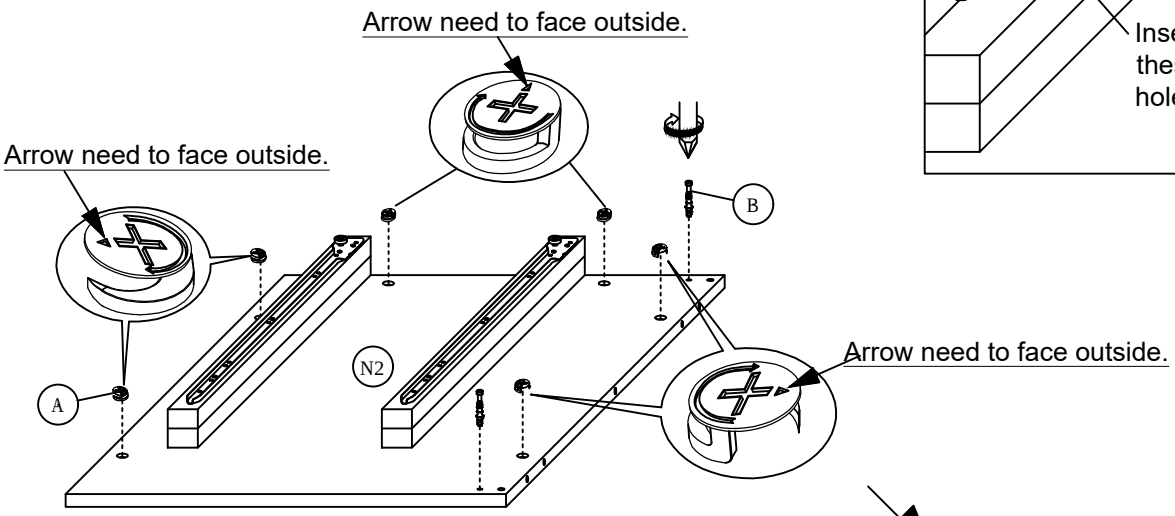

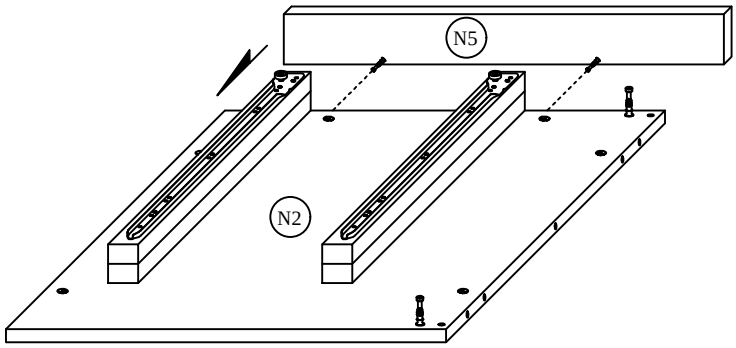

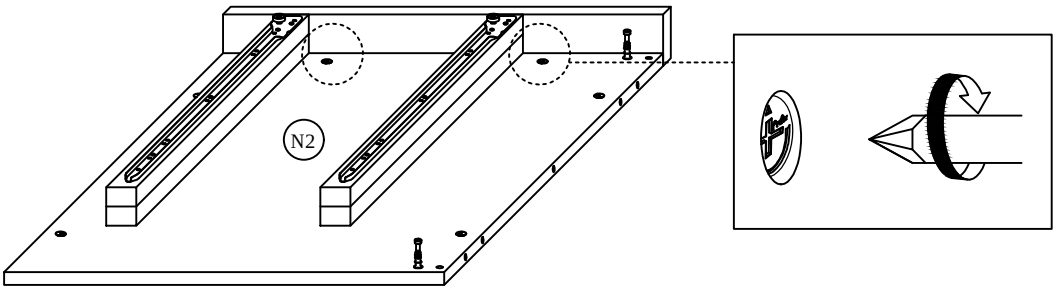

STEP 4

Fix the 2 pieces (K) to the (N3) by using 8 pieces (L).Then insert 6 pieces (A) and 2 pieces (B). Combine (N5) to (N3) then tighten the 2 pieces (A)-(pre insert in step 2) as shown.

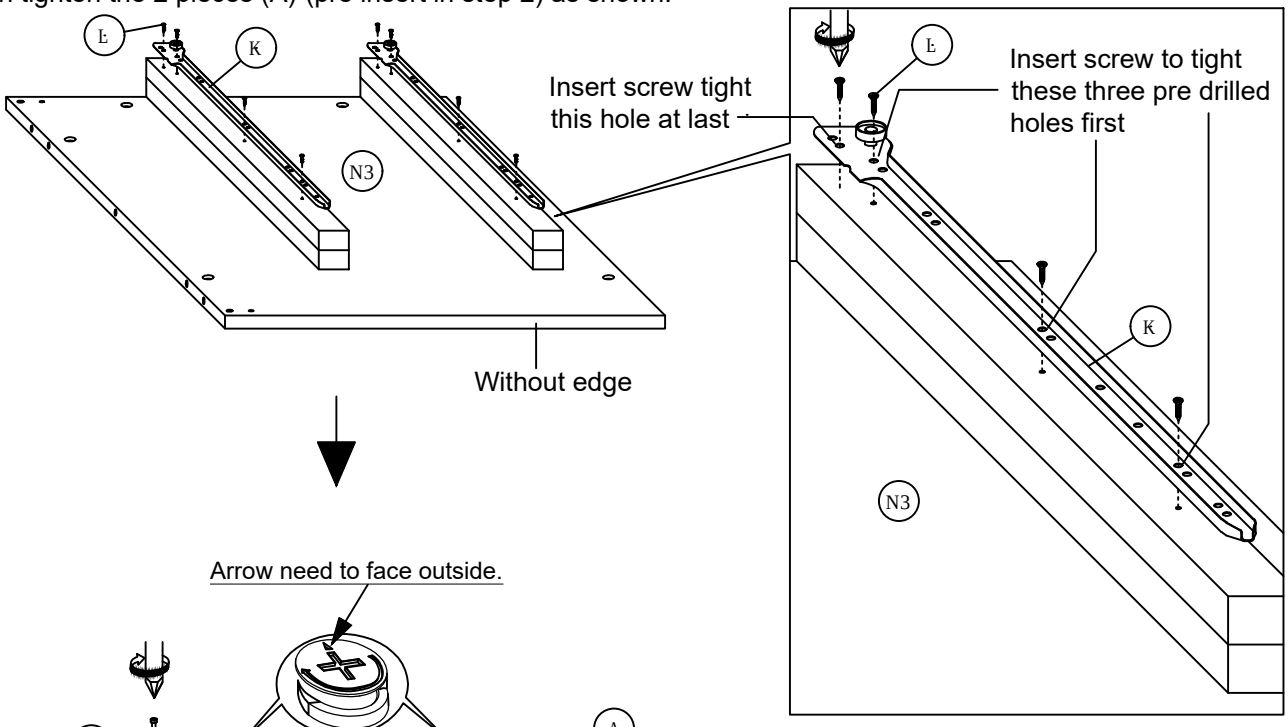

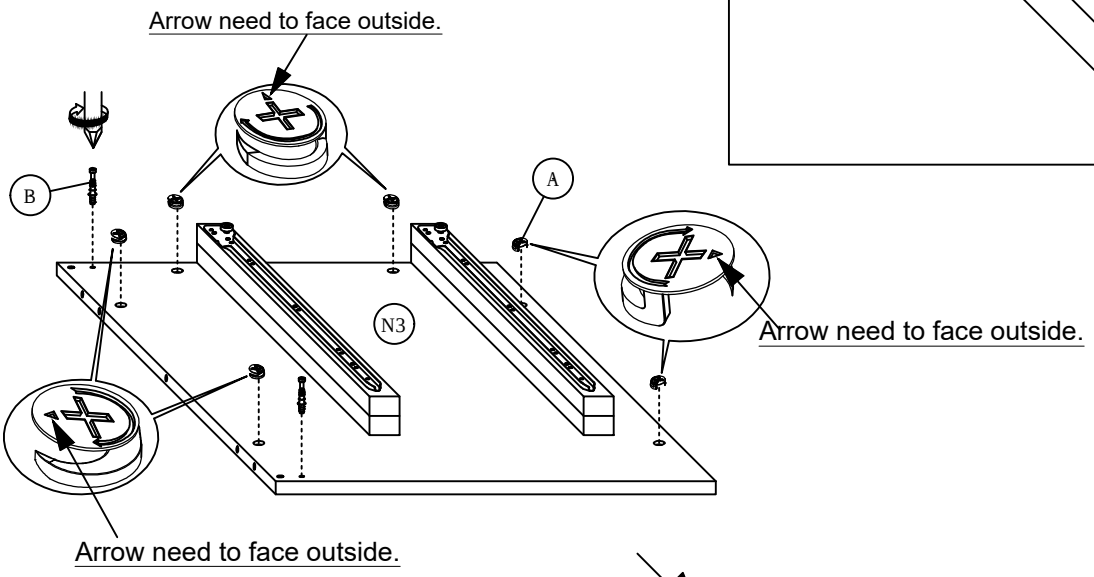

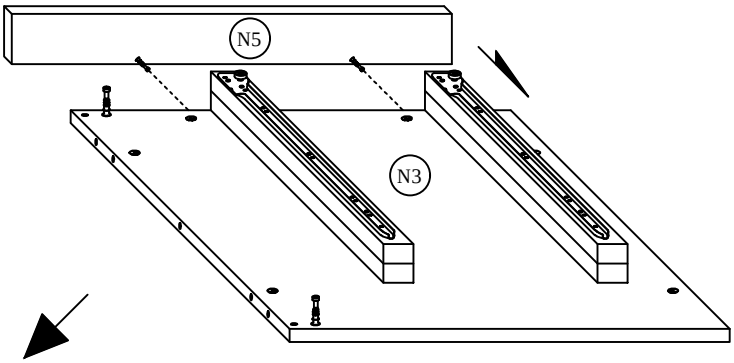

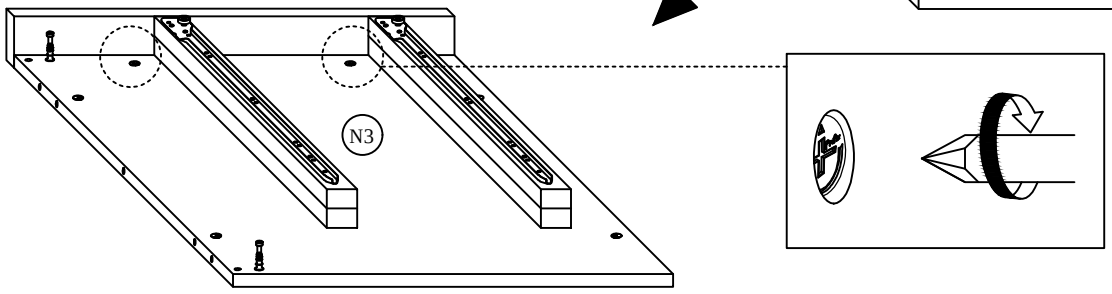

STEP 5

Insert 4 pieces (B) and 6 pieces (C) to the (N10) as shown.

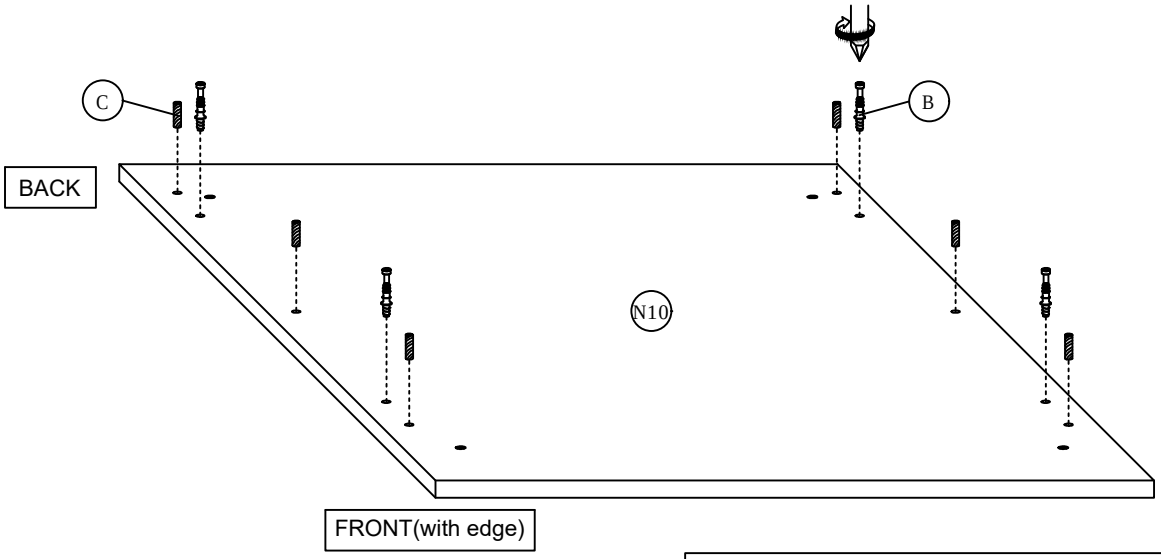

Assembled looks

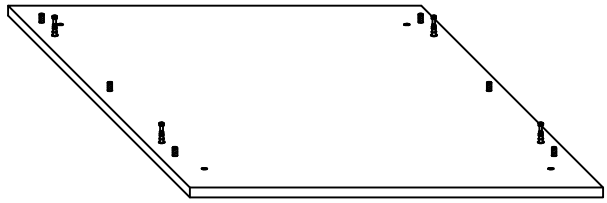

STEP 6

Insert 8 pieces (B) and 6 pieces (C) to the (N1) as shown.

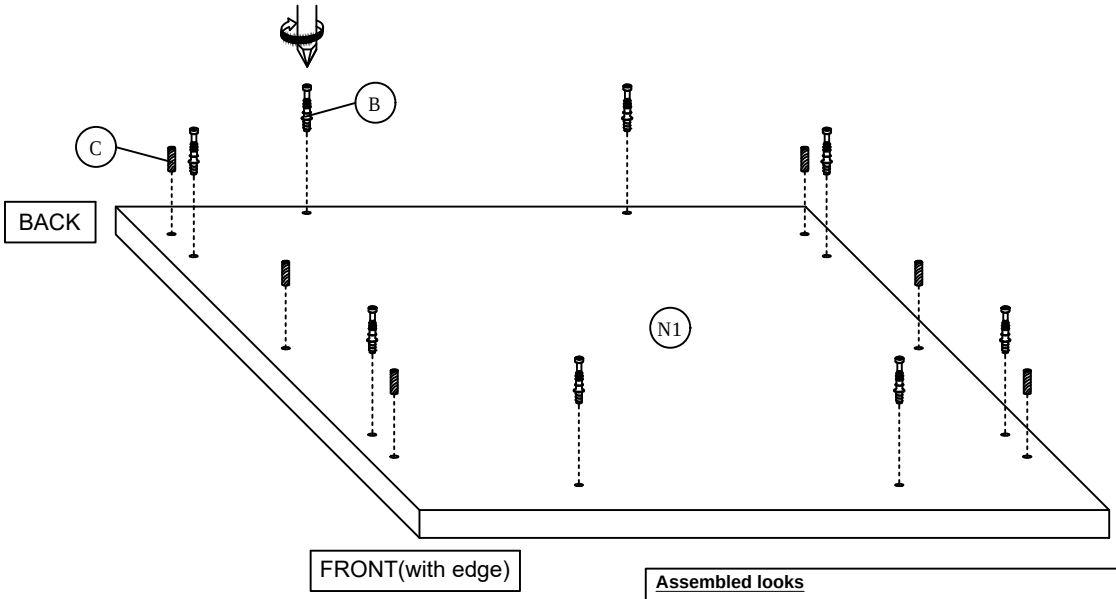

Assembled looks

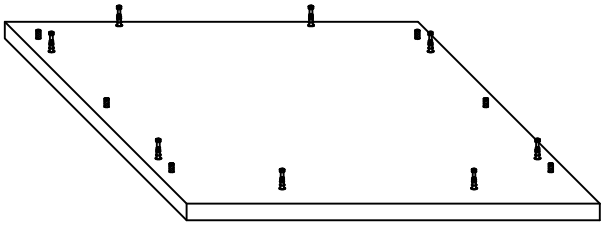

STEP 7

Combine (N4),(N2) then tighten the 2 pieces (A)-(pre insert in step 1) as shown.

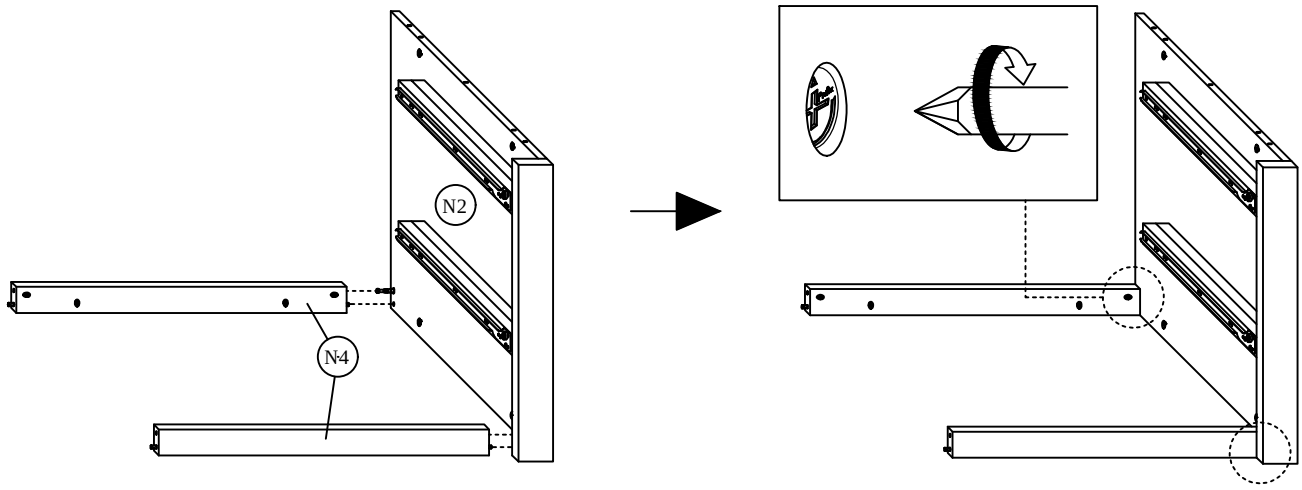

STEP 8

Combine (N3) to (N4) then tighten the another 2 pieces (A)-(pre insert in step 1) as shown.

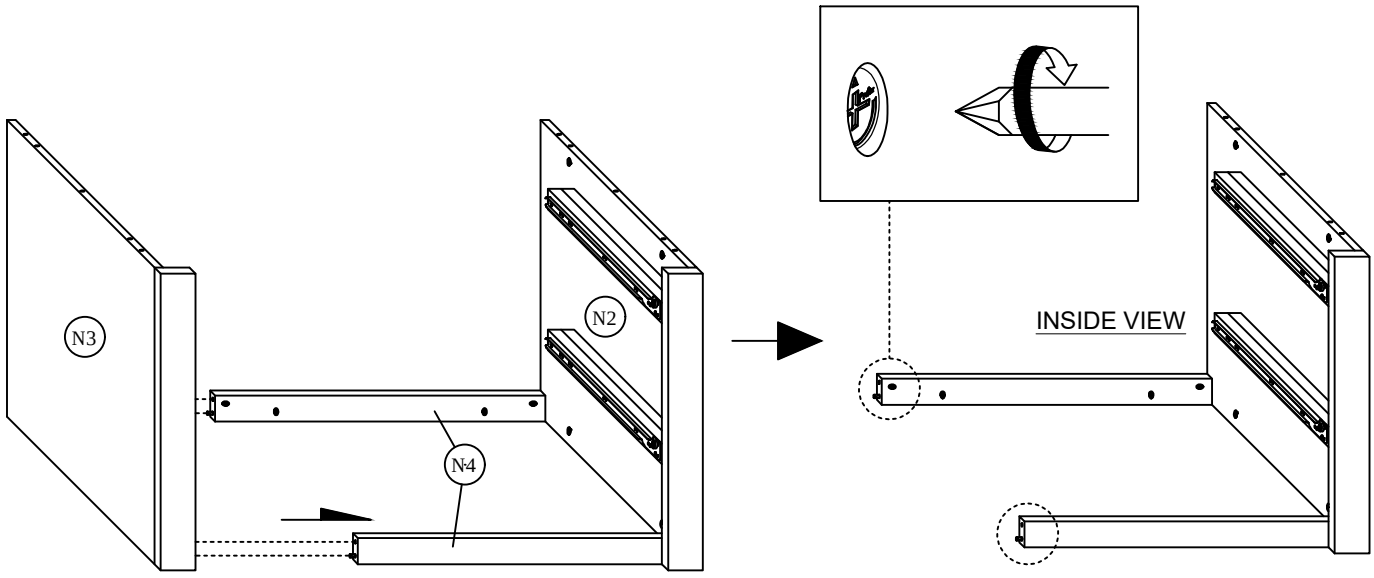

STEP 9

Combine (N10) to (N2),(N3) then tighten the 4 pieces (A)-(pre insert in step 3 and 4) as shown.

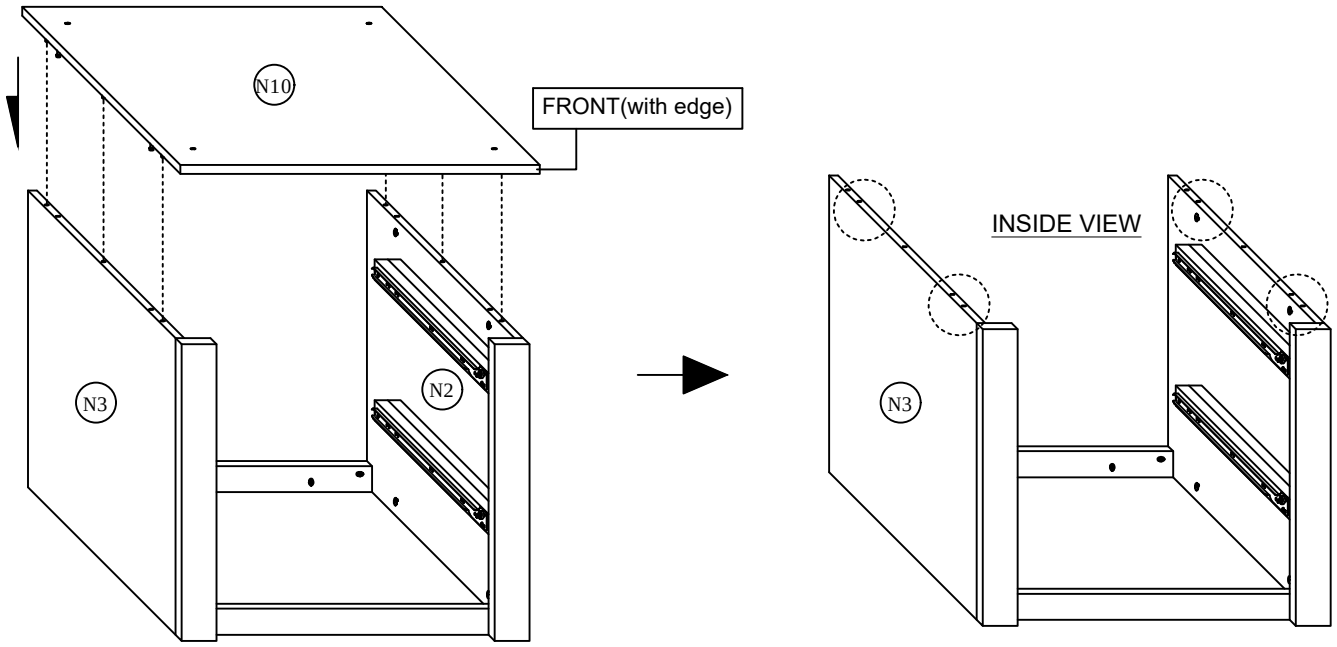

STEP 10

Turn (22) clockwise to combine it to the (N10) as shown.

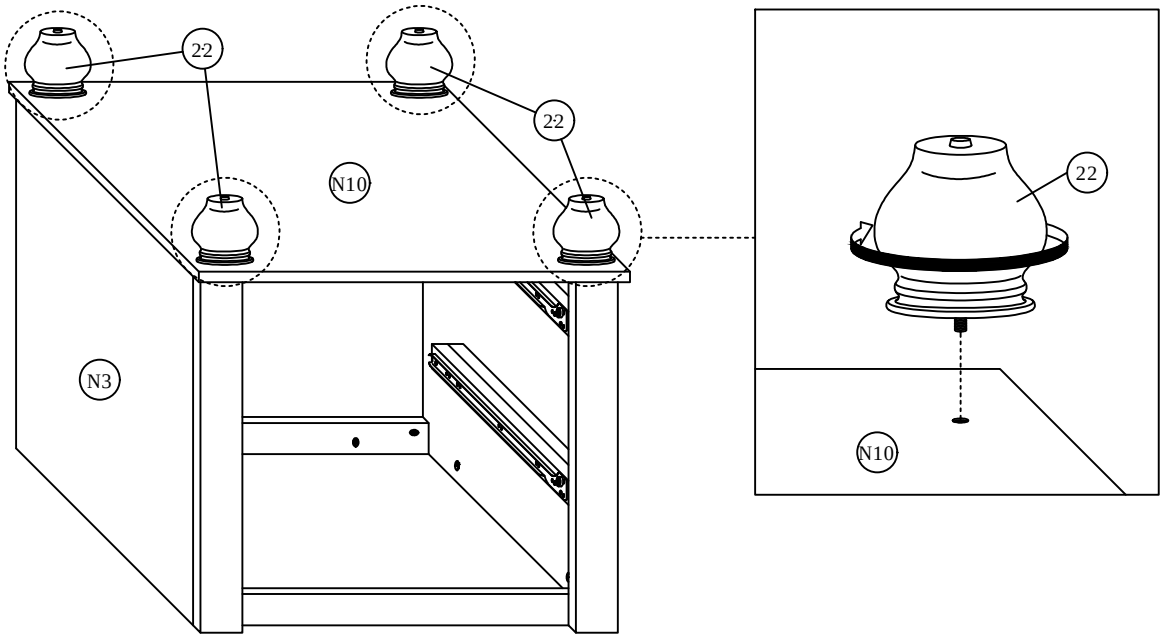

STEP 11

Combine (N1) to the frame then tighten the remaining 8 pieces (A)-(pre insert in step 1,3 and 4) as shown.

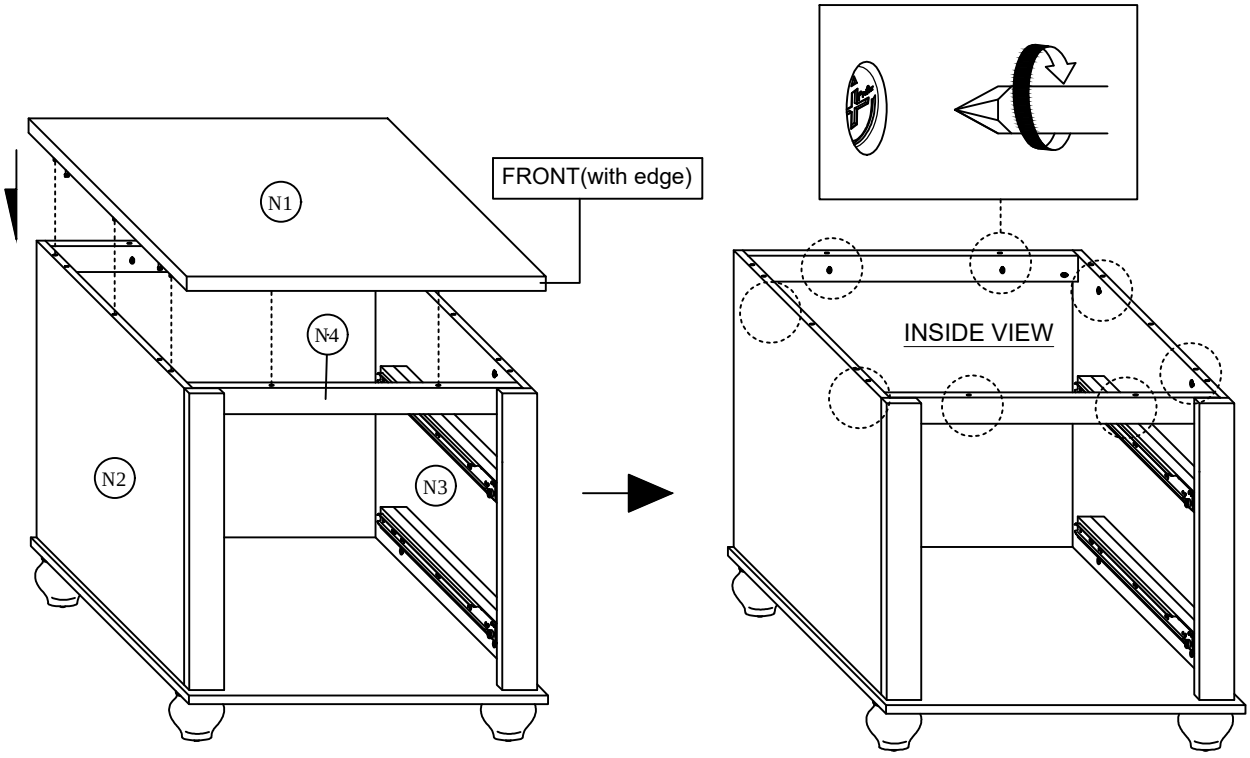

STEP 12

Put the (N6) to the gap of (I) as shown.Direction of the side with colored paper must be the same.

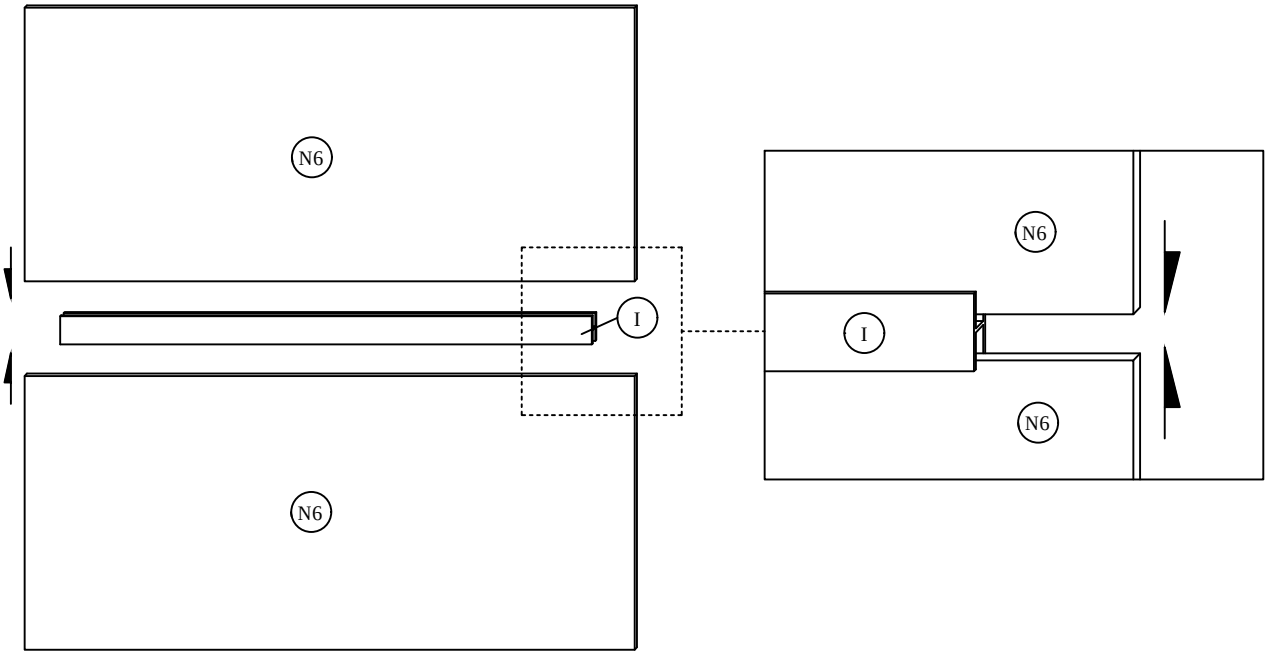

STEP 13

Insert the 16 pieces (H) to fix the (N6) as shown. Colored paper face to outside.
To prevent blocking (N1) and (N10), make sure the (I) at the middle of (N6) , do not over high or lower.

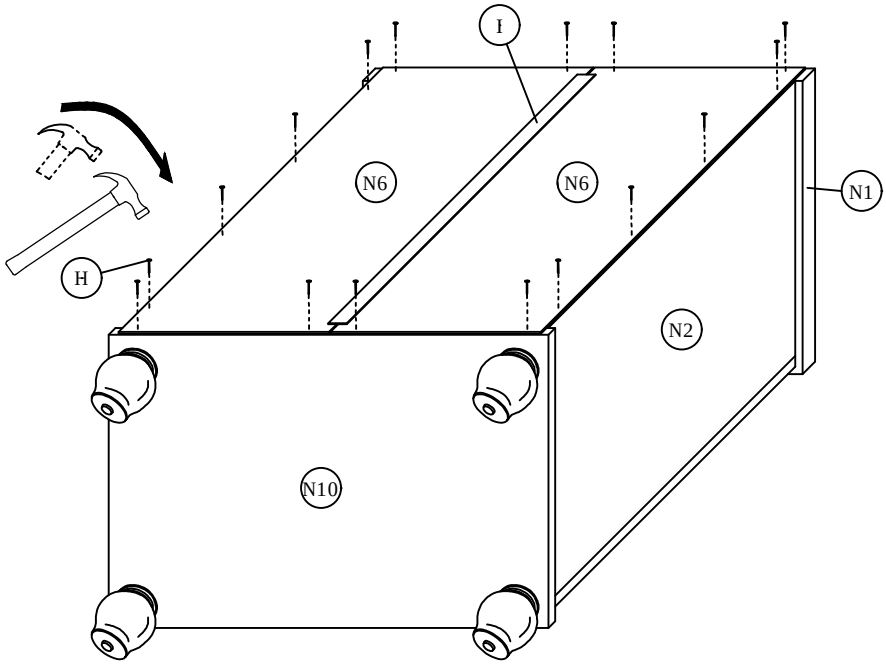

STEP 14

Insert 3 pieces (B) to the (N7) as shown.This step needs to be **done twice**.

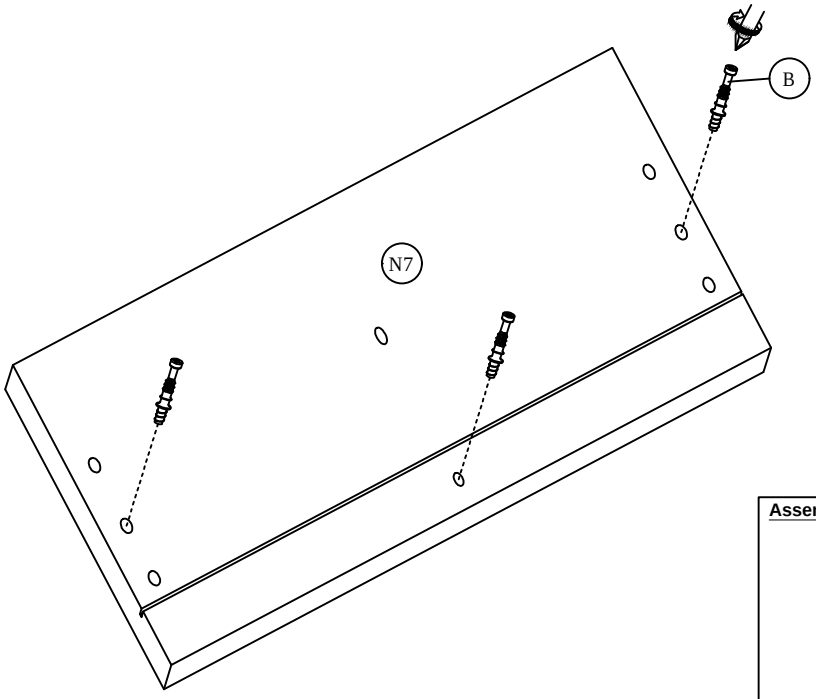

Assembled looks

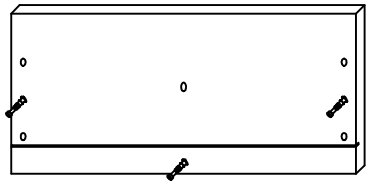

STEP 15

Insert 1 piece (A),(B) and 2 pieces (D) to (19) as shown.This step needs to be **done twice**.

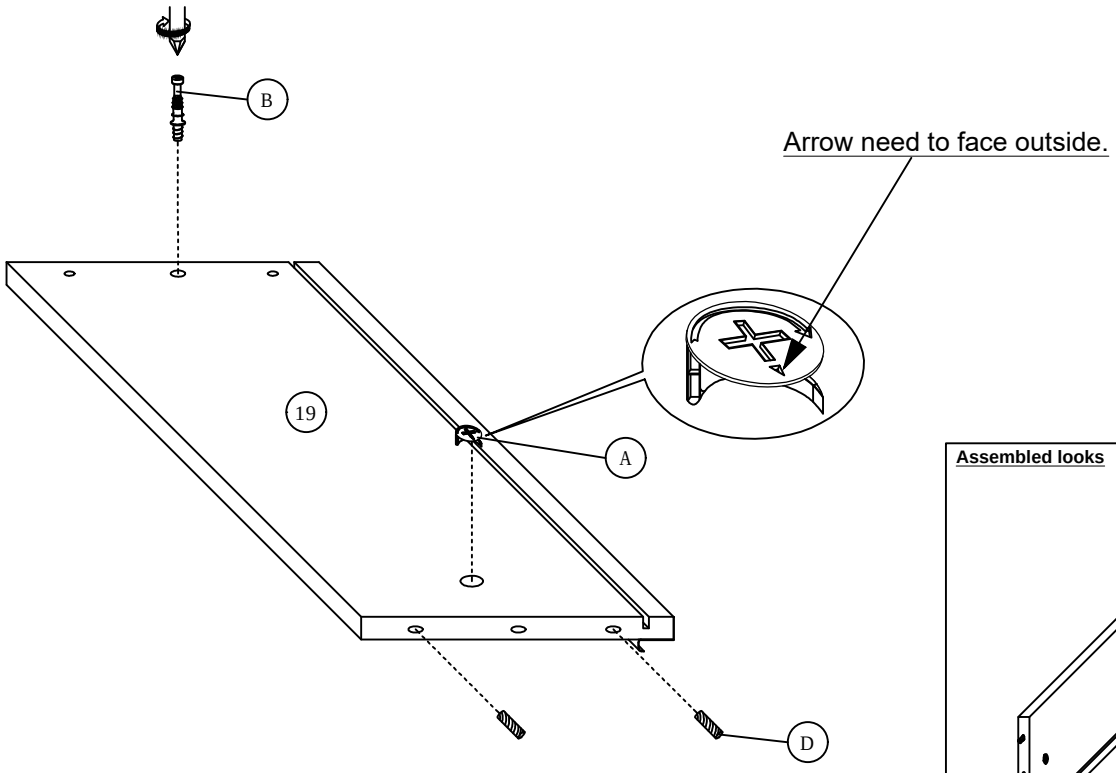

Assembled looks

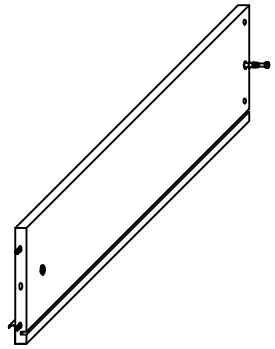

STEP 16

Insert 1 piece (A),(B) and 2 pieces (D) to (20) as shown.This step needs to be **done twice**.

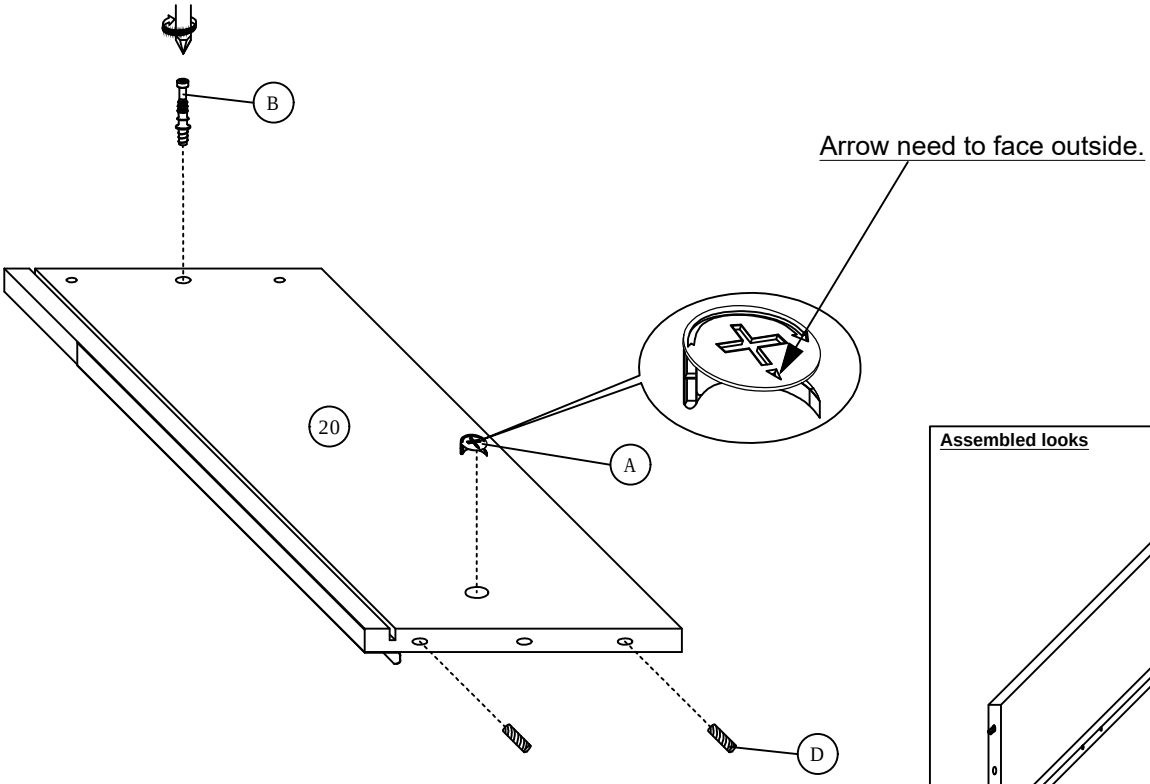

Assembled looks

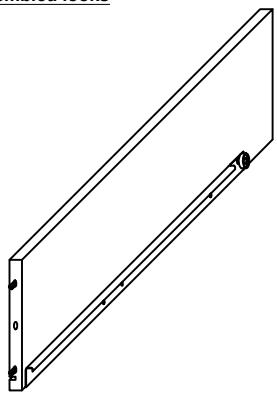

STEP 17

Insert 2 pieces (A) , 1 piece (B) and 4 pieces (D) to (N8) as shown.This step needs to be **done twice**.

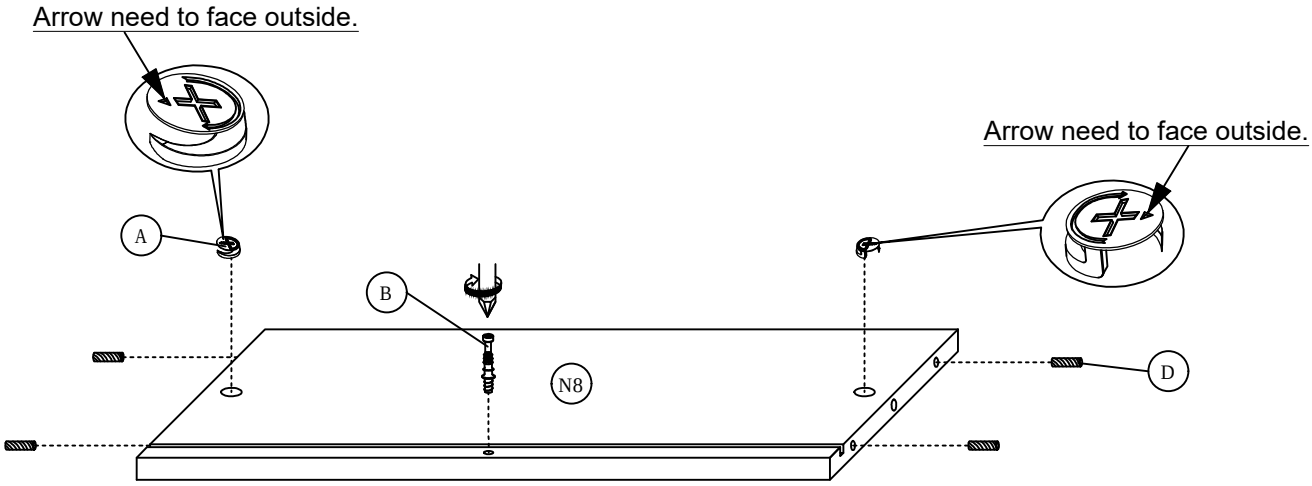

Assembled looks

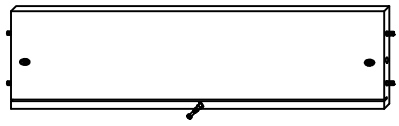

STEP 18

Insert 2 pieces (A) to (21) as shown.This step needs to be **done twice**.

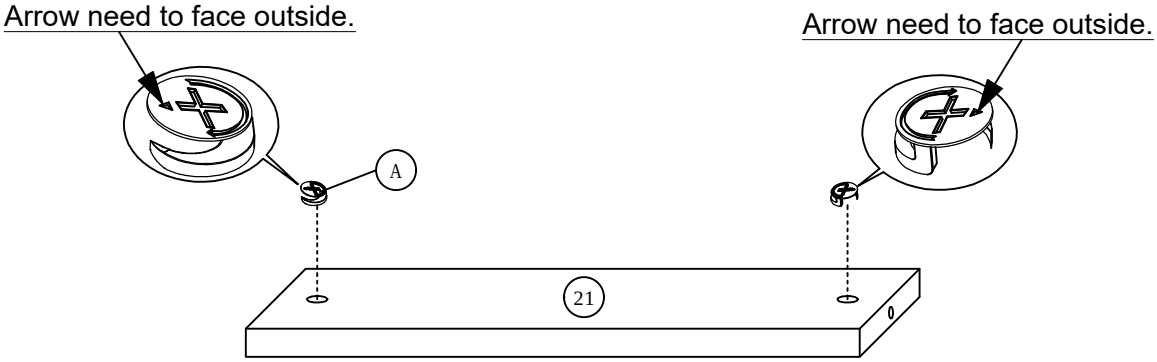

Assembled looks

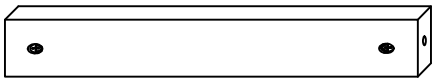

STEP 19

Combine the (19) and (20) to the (N8) . Then tighten the 2 pieces (A)-(pre-insert in step 17) as shown.This step needs to be **done twice**.

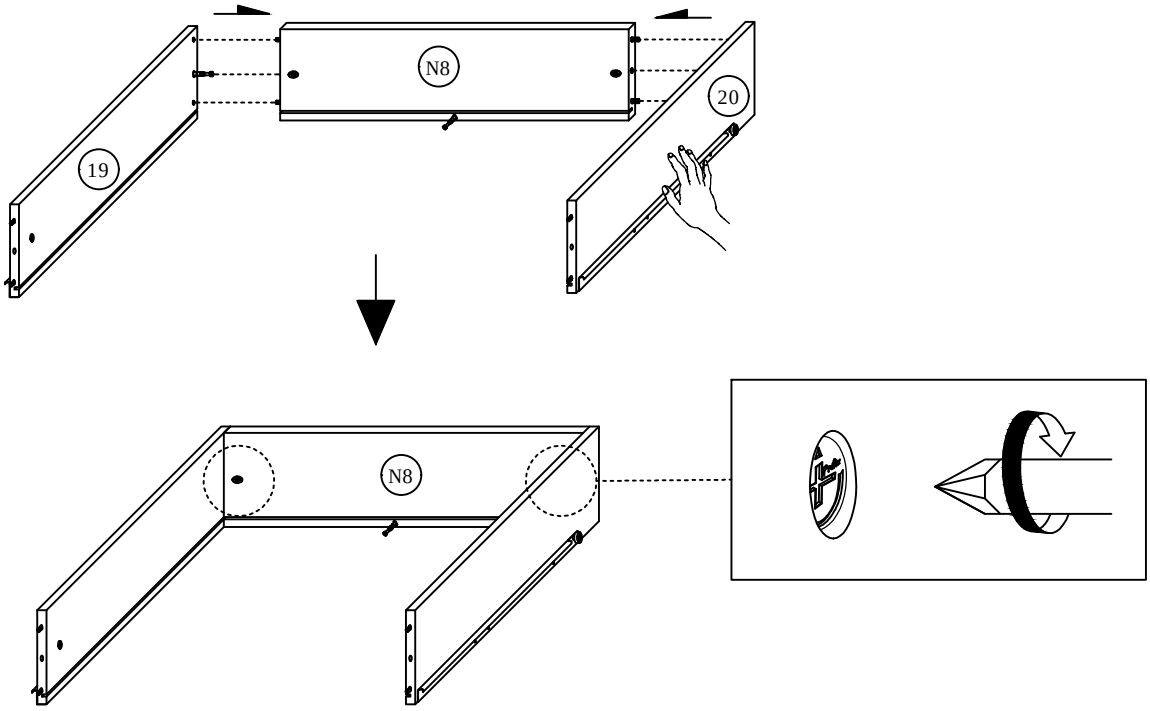

STEP 20

Put the (N9) into the gap of (19),(20) and (N8) as shown.This step needs to be **done twice**.

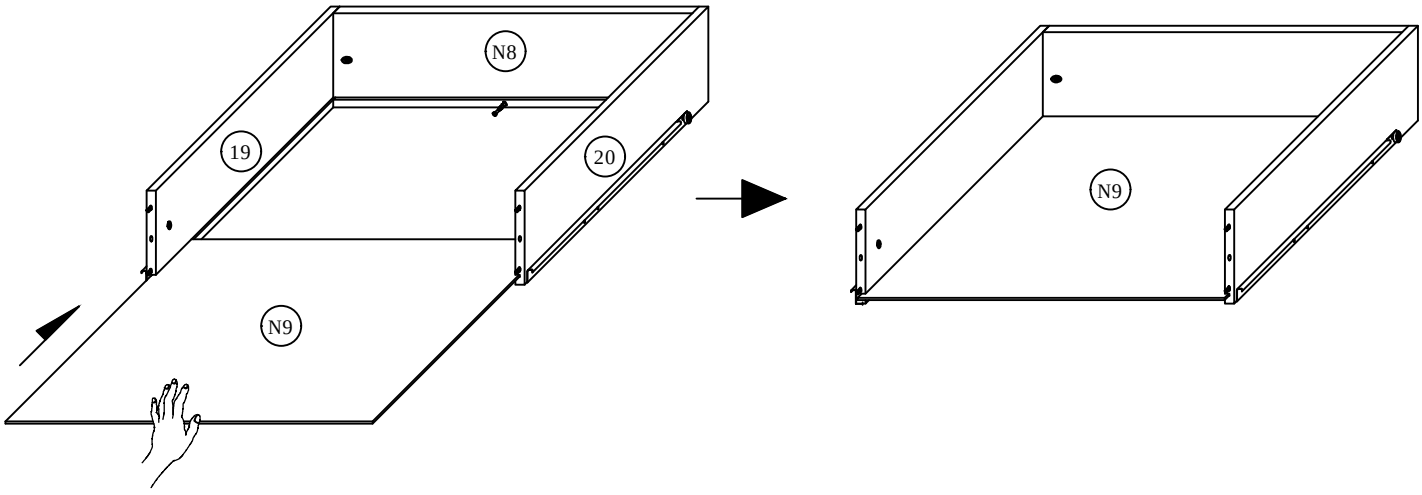

STEP 21

Combine the (21) to the (N8) then tighten the 1 piece (A)-(pre-insert in step 18) as shown.This step needs to be **done twice.**

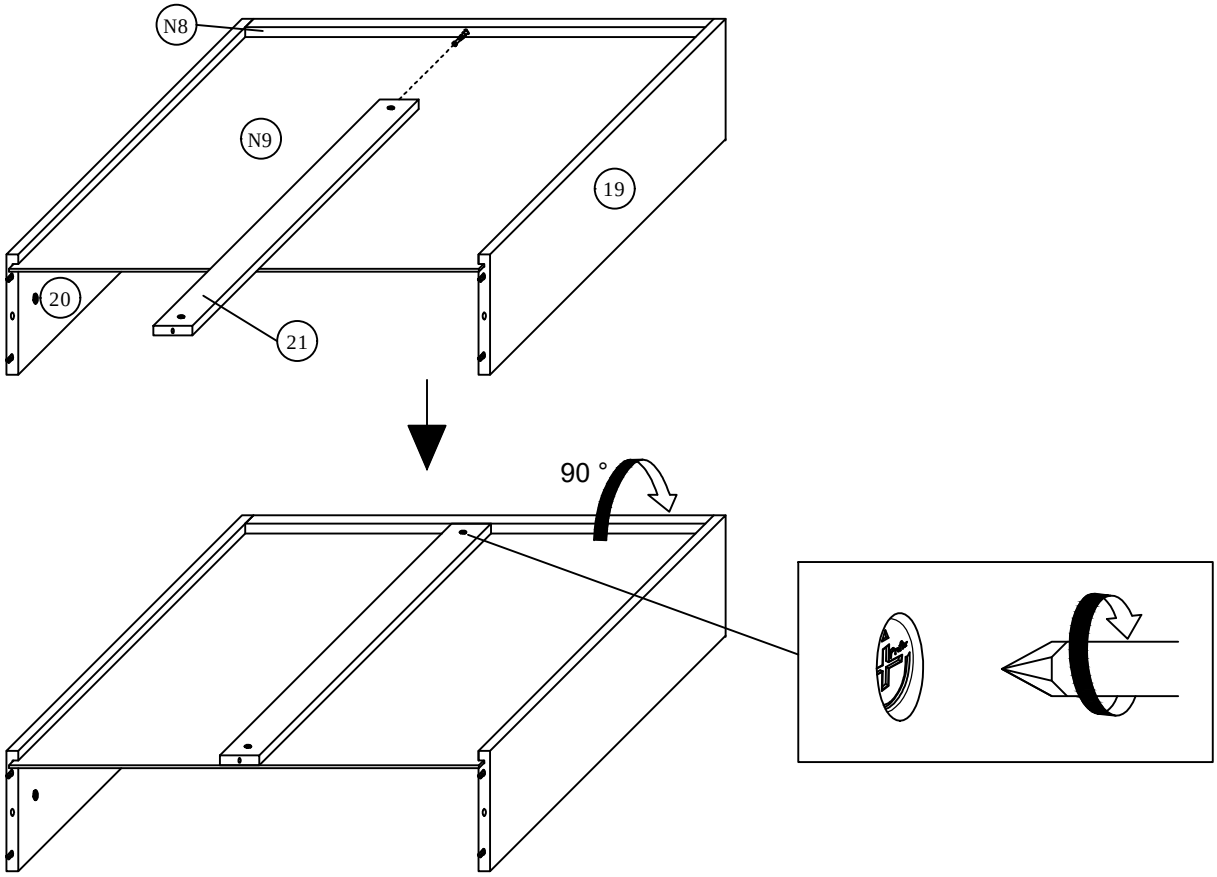

STEP 22

Combine the (N7) to the drawer frame. Then tighten the 3 pieces (A)-(pre-insert in step 15,16 and 18) as shown.This step needs to be **done twice**.

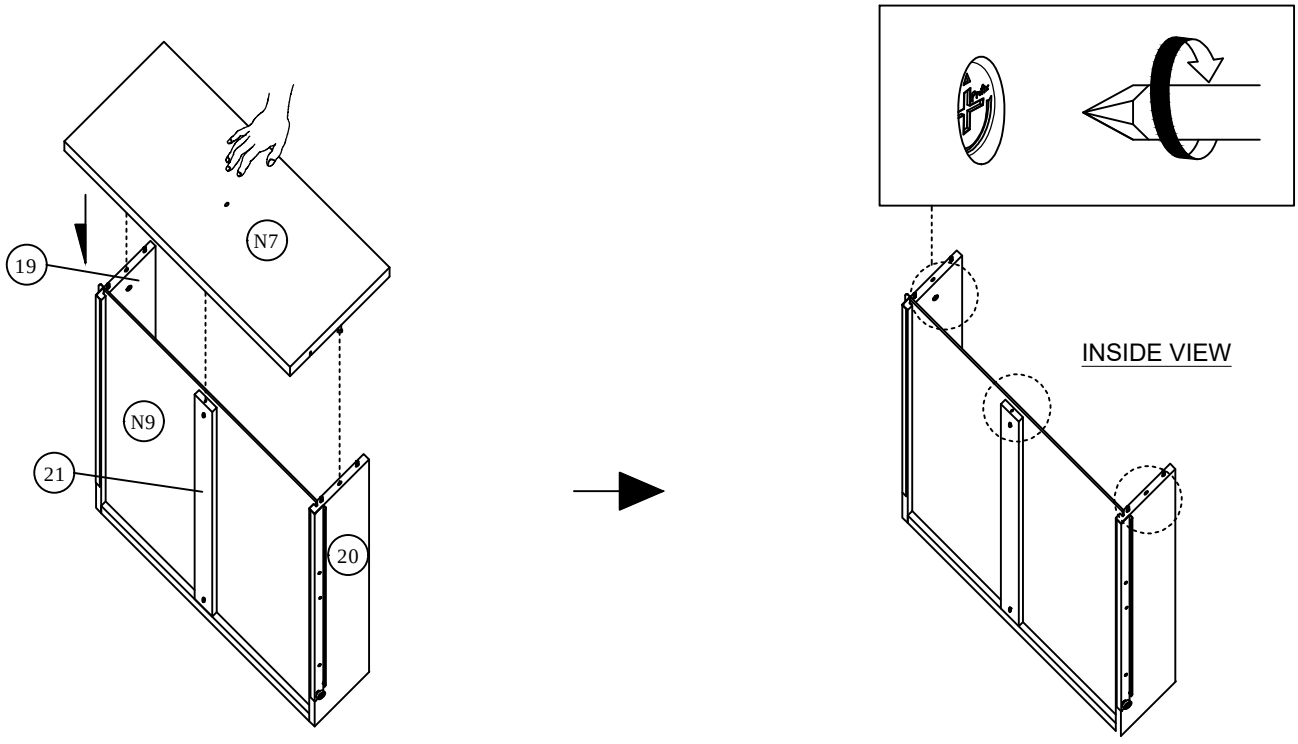

STEP 23

Combine (F),(G) then insert 1 piece (E) to fix as shown (Hole of (F) at upper side).This step needs to be **done twice.**

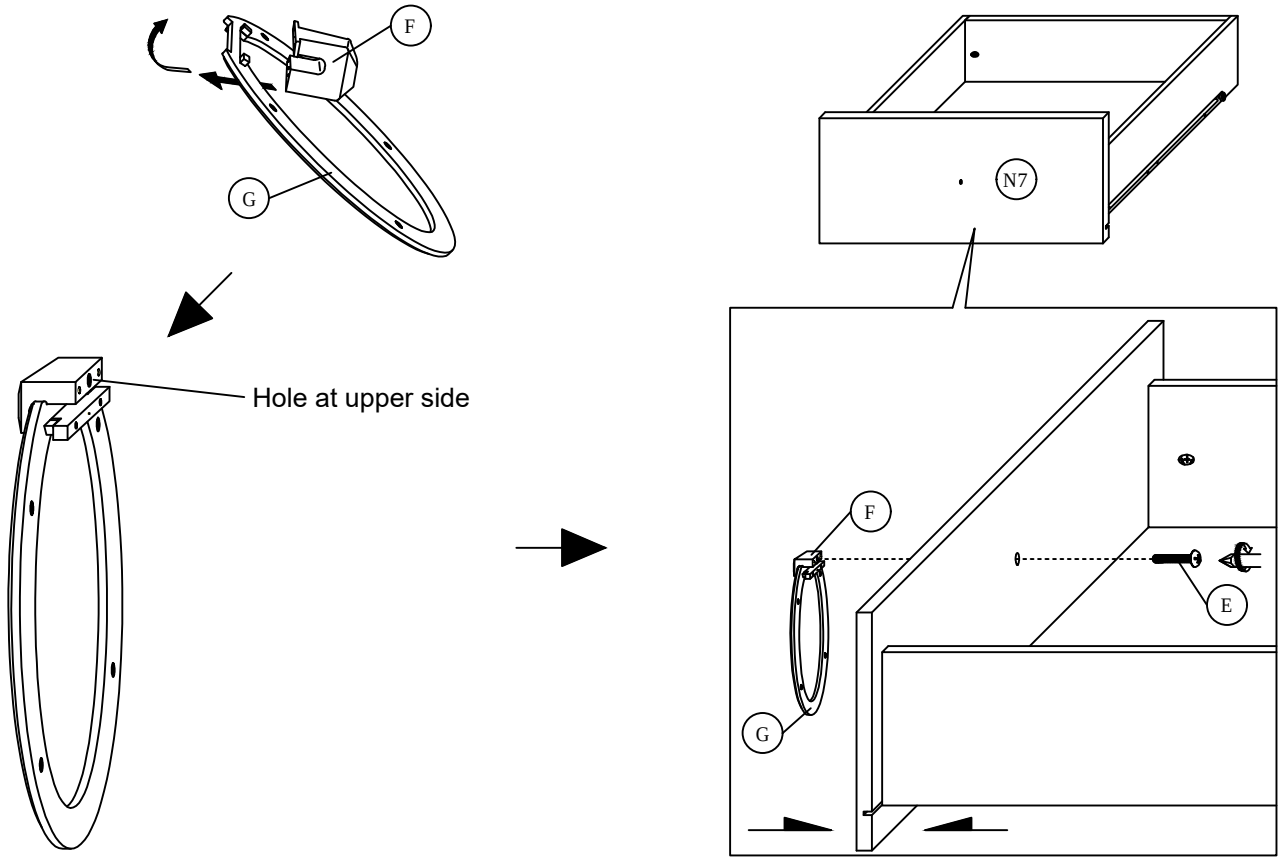

STEP 24

Align the position then push the 2 pieces drawer to inside exactly by your hand as shown.

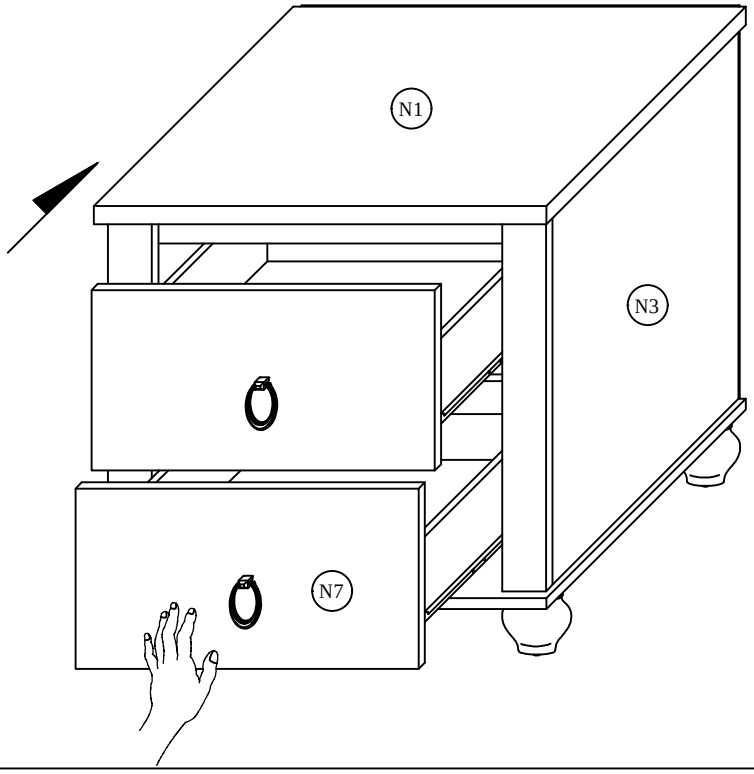

STEP 25

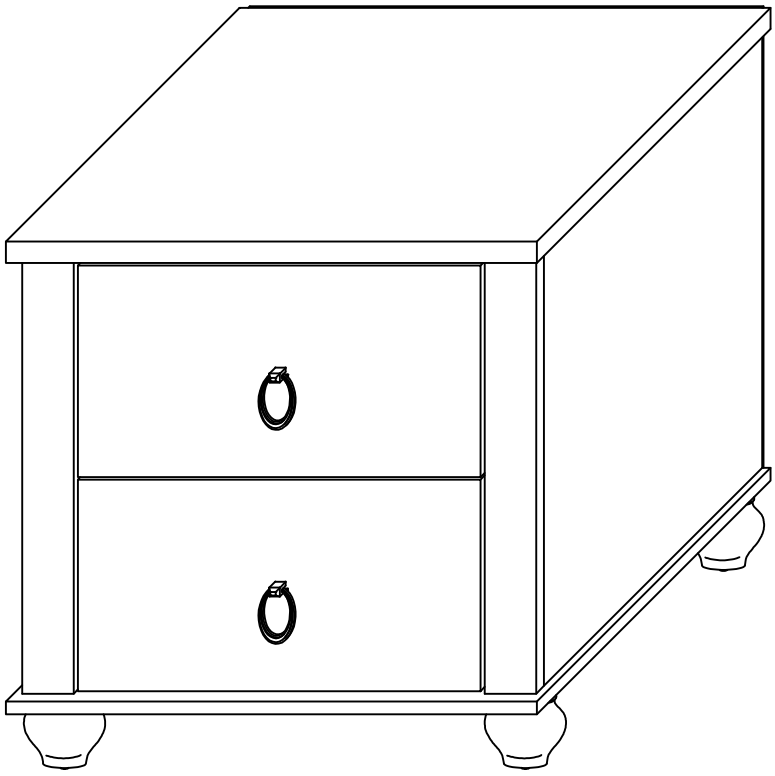

ASSEMBLY COMPLETED