WATER CREATION

MODEL: ABERDEEN72

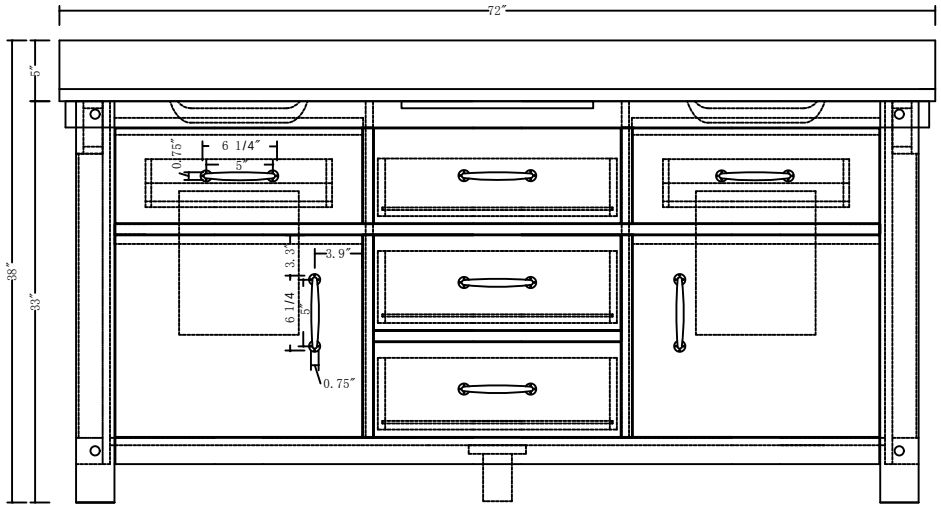

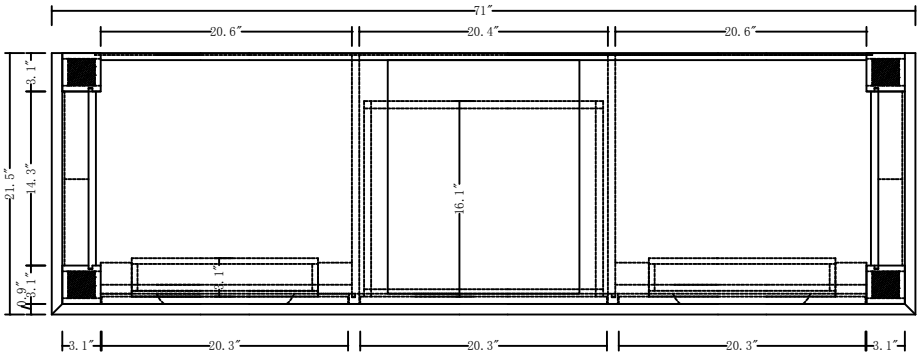

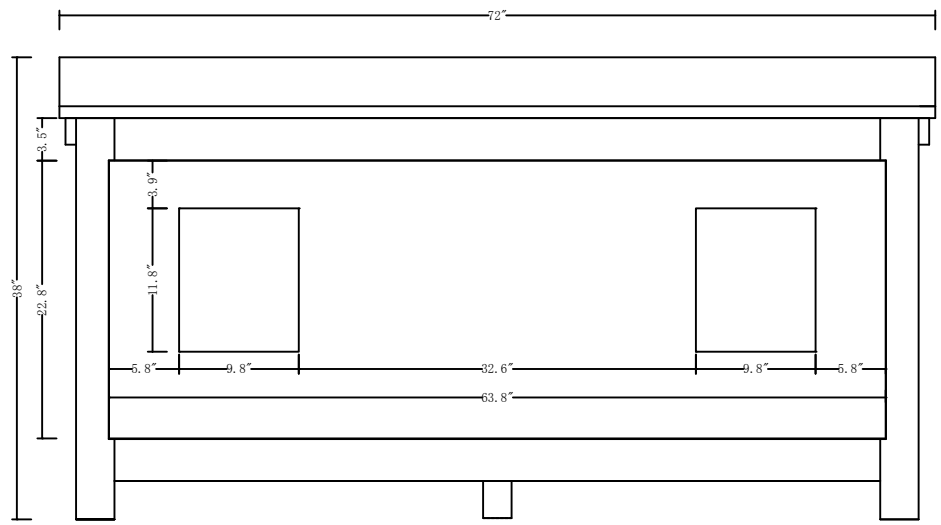

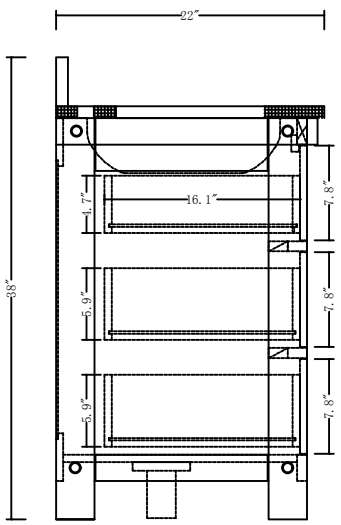

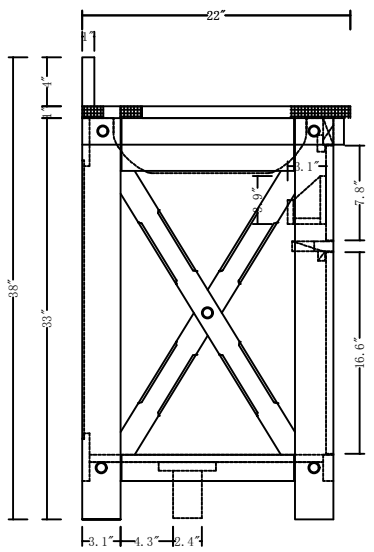

WATER CREATION

MODEL: ABERDEEN72

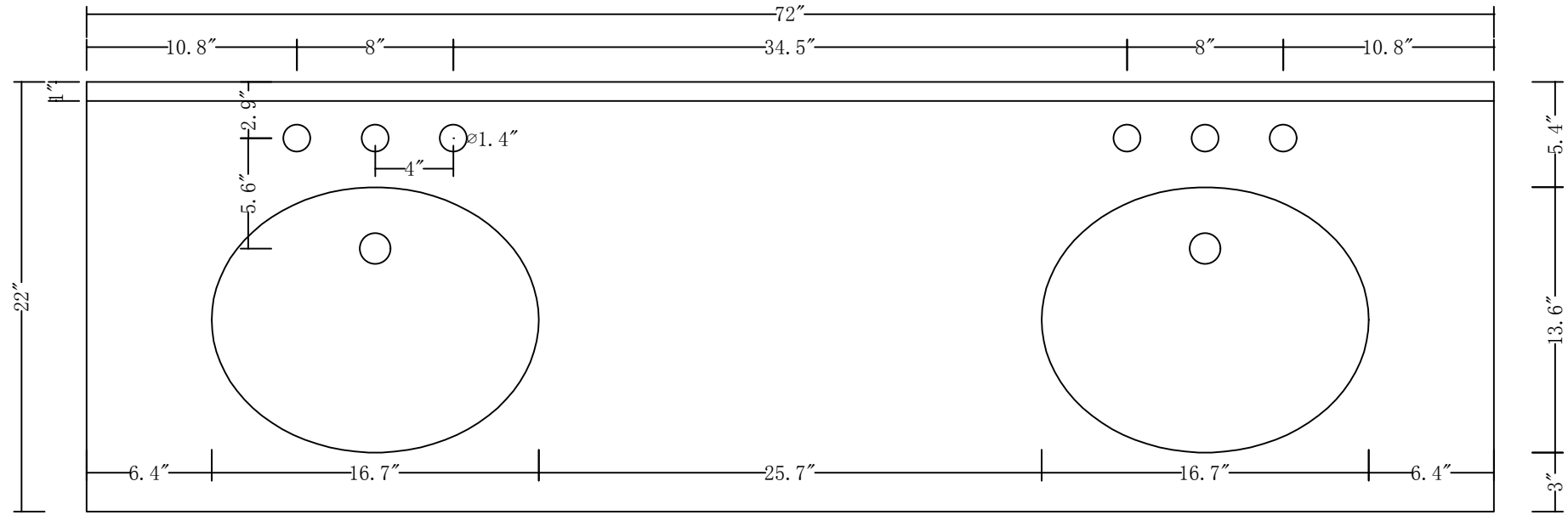

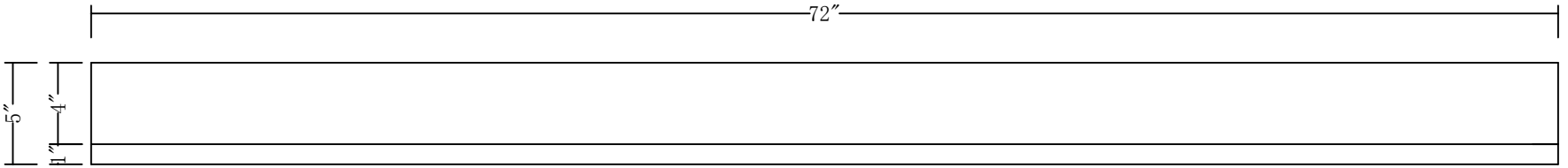

WATER CREATION

MODEL: ABERDEEN72

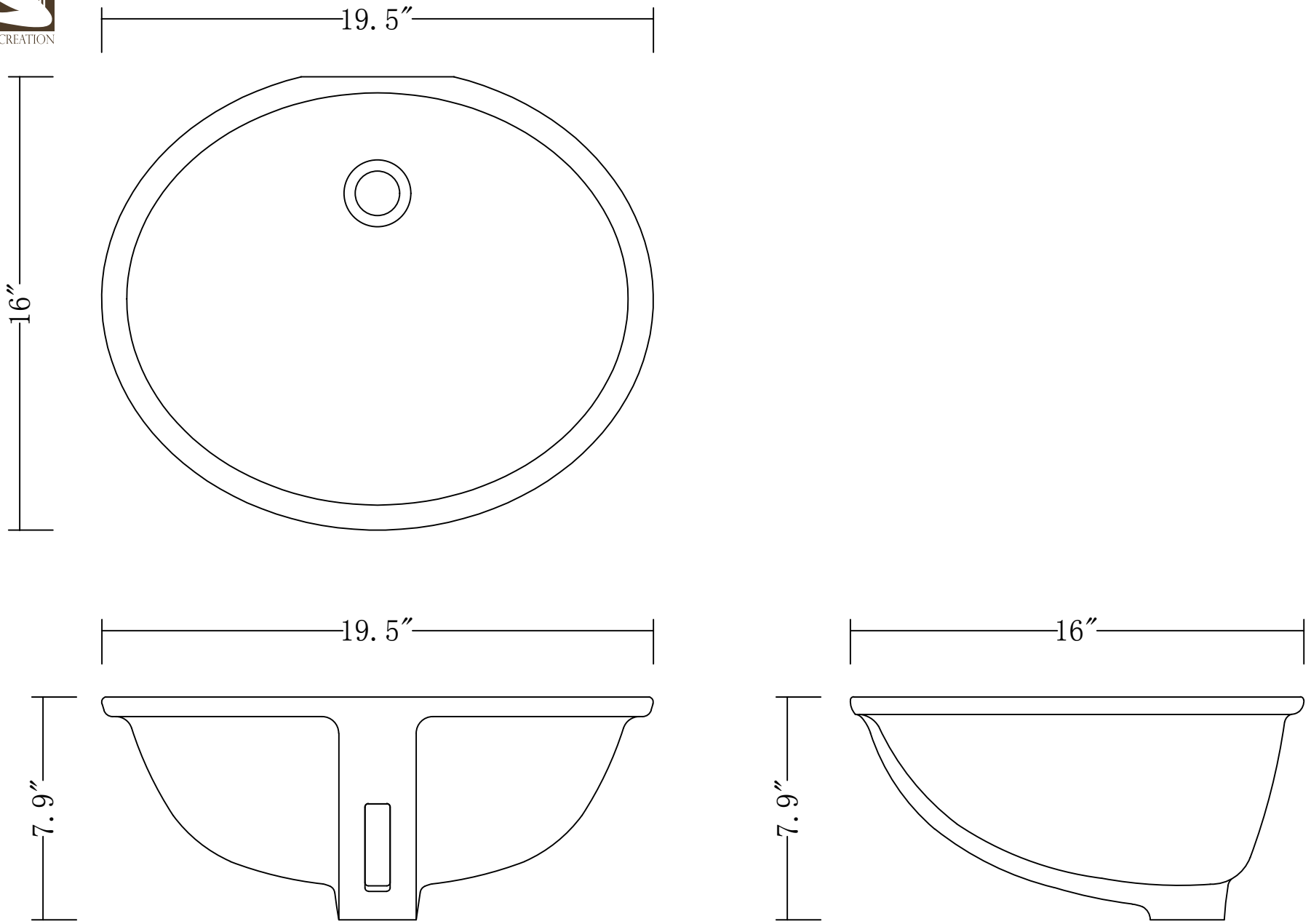

WATER CREATION

MODEL: PAISLEY-M-2436

