Assembly Instructions

Caution : You must read this before you proceed

Care & Maintenance

- Not for commercial use. For residential use only.
- Furniture may scratch floors. We recommend using furniture pads to protect your floors.
- Do not put hot items directly on furniture surface.
- Do not clean furniture with harsh cleansers or polish.
- Do not place furniture under direct sunlight.
- Do not place furniture near heating or cooling vents.
- Do not write on furniture without a padded barrier to protect the surface.
- Do not place furniture outside . For indoor use only.
- Stains may be removed with mild soap solution and damp cloth.
- Children should not climb or jump on the furniture.
- Dust and pick-up spills using a clean, non-colored, lint-free cloth.

Please see the bed section to find the hardware and bed leg.

Sets often ship in multiple boxes and may arrive a day or two apart.

QUEEN BED
N770P500419-N770P500420

! WARNING !

STRANGGULATION HAZARD
NEVER place bed near windows where cords from blinds or drapes may strangle achild.
NEVER suspend strings over bed.
NEVER place items with astring, cord, or ribbon, such as hood strings or pacifercords, around a child's neck. These items may catch on bed parts.
ALWAYS follow assembly instructions.
Not intended for children under the age of six. INFANTS HAVE DIED FROMBECOMING ENTRAPPED IN BEDs. Openings in and between bed parts can entrapthe neck and head of a small child.
NEVER use bed for child under the age of six.
The mattress must be appropriately sized for the bed. If the mattress is undersizeddangerous gaps can exits and a person can become entrapped or entangled in the frame and suffocate

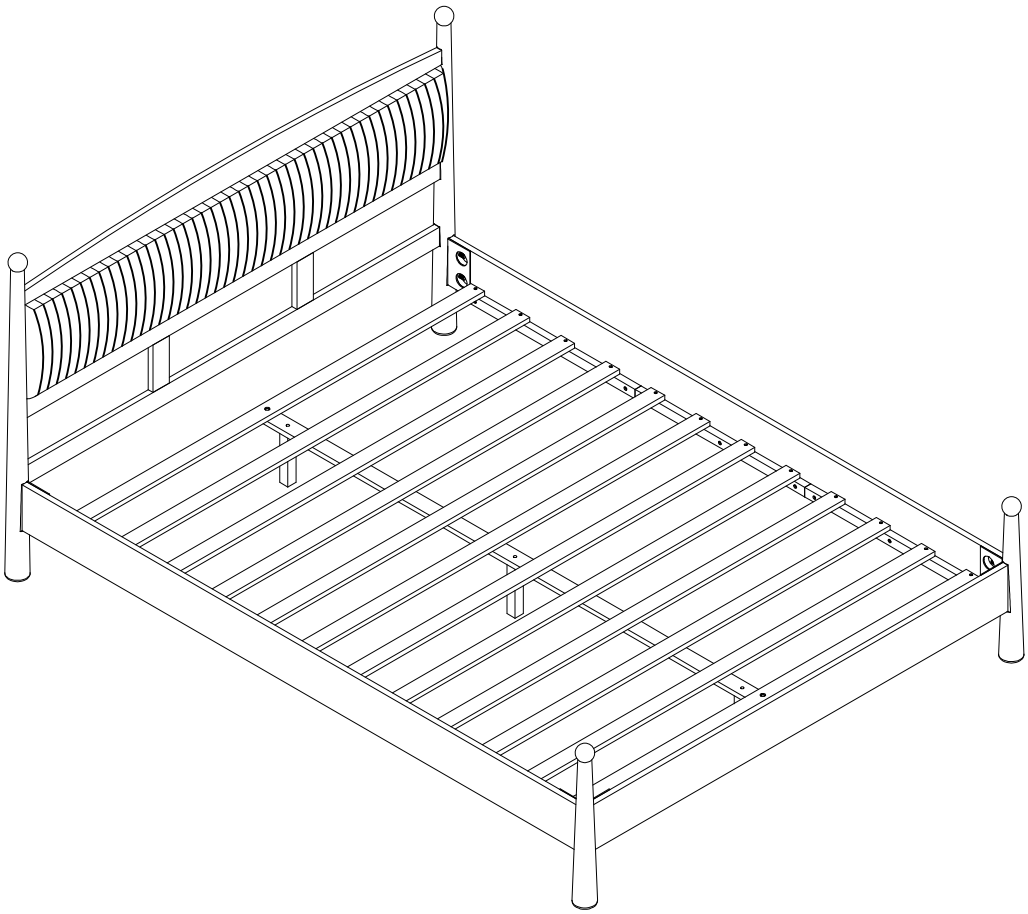

CAUTION: This Queen Bed is NOT a TOY.
Keep your child / children at bay in the process of assembly.
For turning the Queen Bed and to prevent damage to the Queen Bed.
02 persons may be needed to execute this action.

PARTS LIST: N770P500419

1	Leg - left (Headboard)	1PC	2	Leg - right (Headboard)	1PC
3	Leg - left (Footboard)	1PC	4	Leg - right (Footboard)	1PC
7	Lower bar	1PC	8	Vertical bar	2PCS
9	Side rails	2PCS	10	Middle support bar	1PC
11	Middle leg	3PCS			

PARTS LIST: N770P500420

5	Top bar	1PC	6	Middle bar	1PC
12	Footboard	1PC	13	Cushion	1PC
14	Outer slats	2PCS	15	Slats	10PCS

Hardware (Each of the above hardware Including exxtra 1 pc)

Label	Picture	Description	Q.ty
A		Bolts Ø1/4 x 25mm	2 + 1
B		Double-threaded bolts Ø5/16" x 80mm	18 + 1
C		Semicircular washer 28 x 15 x 7 mm	18 + 1
D		Hexagonal nut Ø5/16"	18 + 1
E		Wood screws M4 x 25	24 + 1
F		Wood dowel Ø8 x 30	4 + 1
G		Wrench	1
H		Allen Wrench	1
I		Bolts Ø1/4 x 80mm	4+1
J		Round head screws M4 x 15	15+1
K		Bolts Ø1/4 x 35mm	3 + 1

HARDWARE LIST: N770P500419

Assembly Preparation

Before Begining Assembly

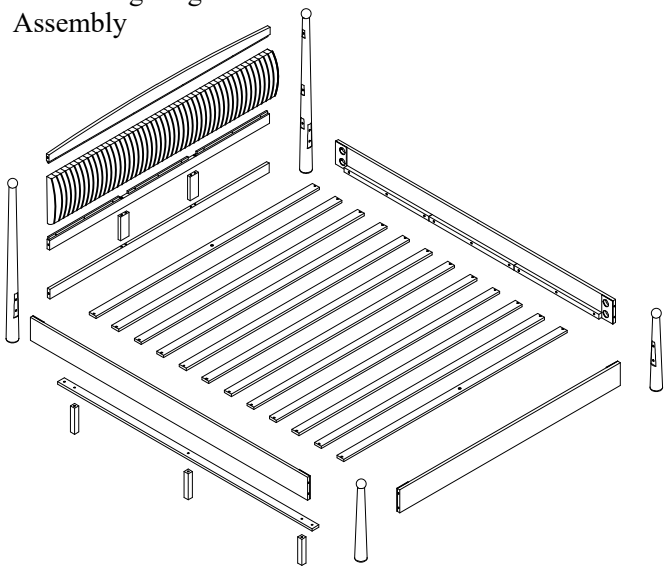

*2 + 1

*1

*18 + 1

*1

*18 + 1

*4 + 1

*18 + 1

*15 + 1

*24 + 1

*3 + 1

*4 + 1

ASSEMBLY TOOLS REQUIRED (NOT INCLUDED)

- Read instructions, cover to cover-
- Have 2 adults on hand for assembly-
- Do not assemble on flooring or carpet-
- Assemble on a clean non-marring surface (packing foam)-
- Save all packaging until finished-

Overview

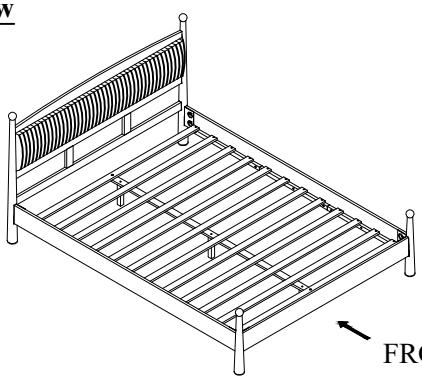

FRONT FACING

This bed has multiple parts and may require up to some 1 hour to assemble.
To give you an overview of the bed parts, the above picture is to help you put the various parts into perspective .
Please read through the instructions here below to familiarise the parts and steps before assembly.

STEP 1

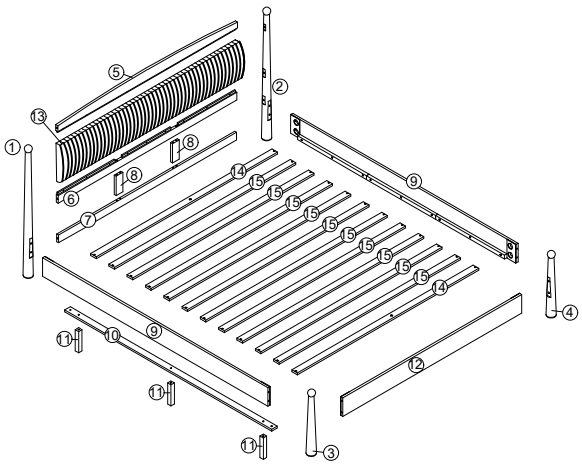

Unpack and place all part on a clean, non-marring surrface.

STEP 2

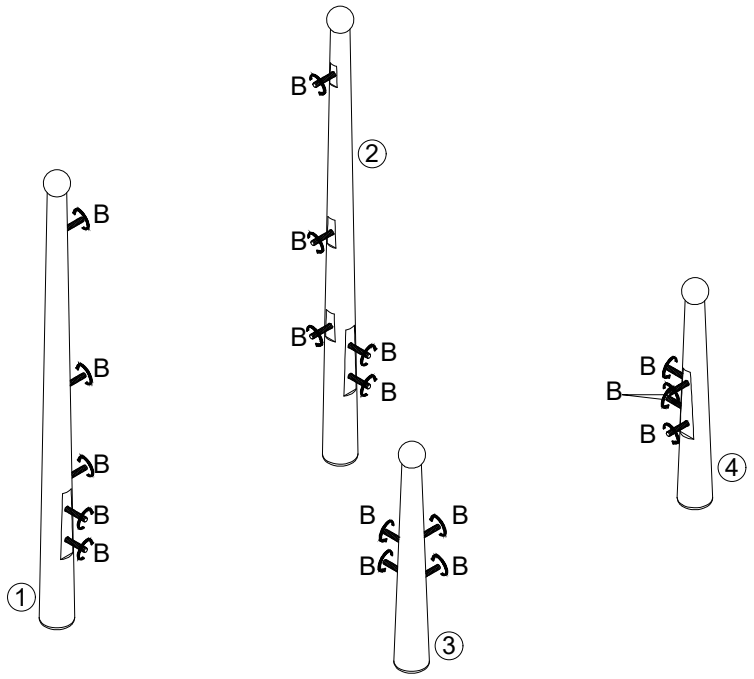

Attach 10 pcs Double-threaded bolts Ⓑ onto the Leg - left (Headboard)① and Leg - right (Headboard)② and 4 pcs Double-threaded bolts Ⓑ onto the Leg - left (Footboard)③ & Leg - right (Footboard)④.

STEP 3

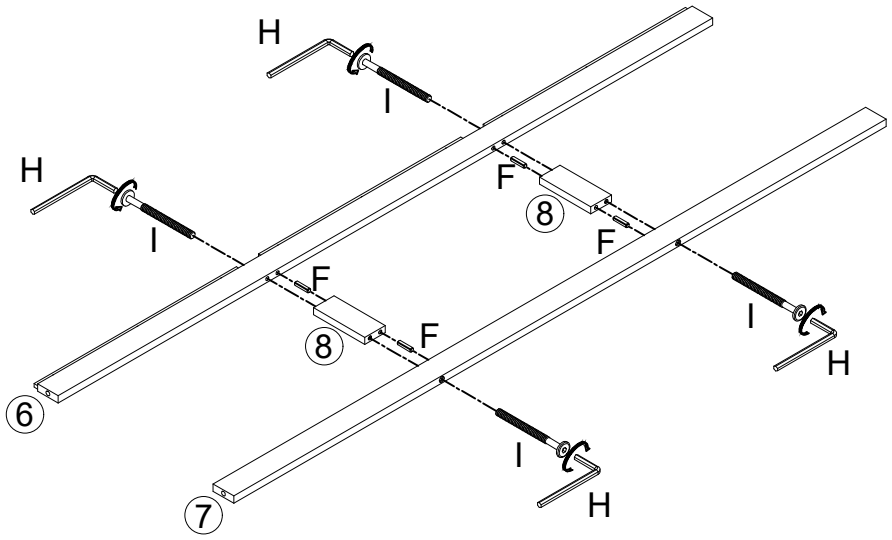

Attach Middle bar⑥ and Lower bar⑦ to Vertical bar⑧ using 4 pcs Wood dowel Ⓕ, 4 pcs Bolts Ⓘ and Allen Wrench Ⓗ. Then tighten the bolts.

STEP 4

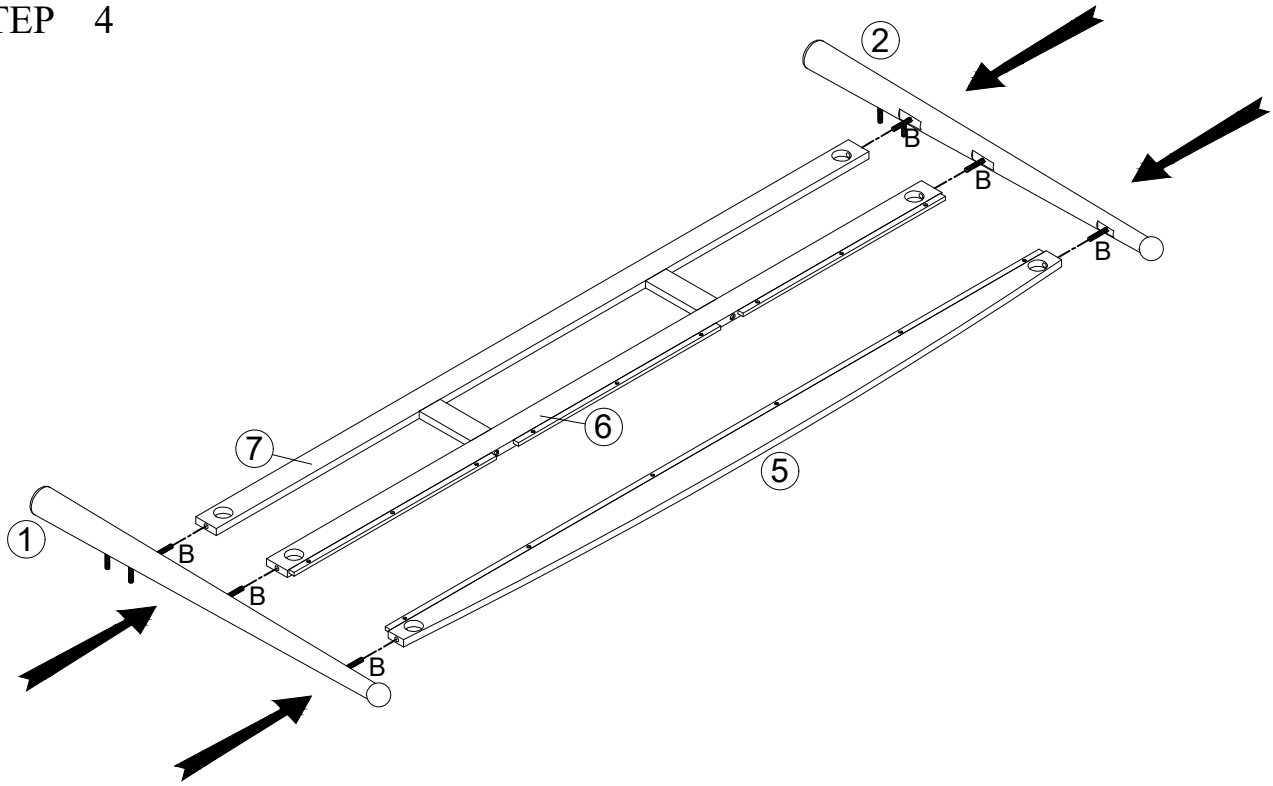

Gently thread the Double-threaded bolts Ⓑ of the Leg - left (Headboard) ① and Leg - right (Headboard) ② into the Top bar ⑤ & Lower bar ⑦ and Middle bar ⑥.

STEP 5

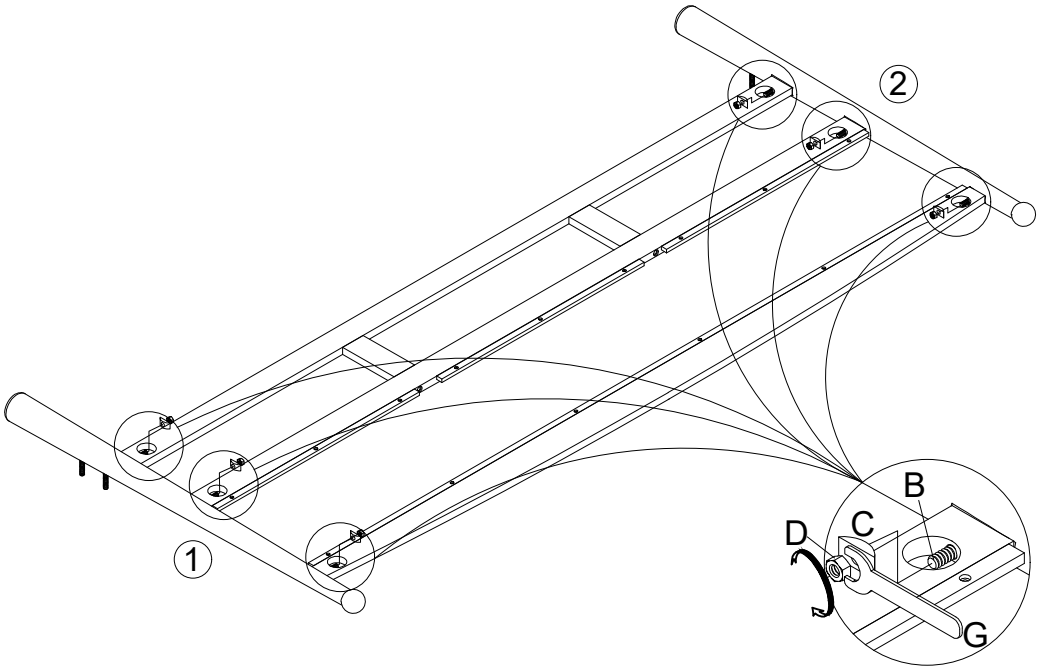

Using 6 pcs Semicircular washer Ⓒ & 6 pcs Hexagonal nut Ⓓ and Wrench Ⓖ to attach to the Double-threaded bolts Ⓑ of the Leg - left (Headboard) ① and Leg - right (Headboard) ②.

STEP 6

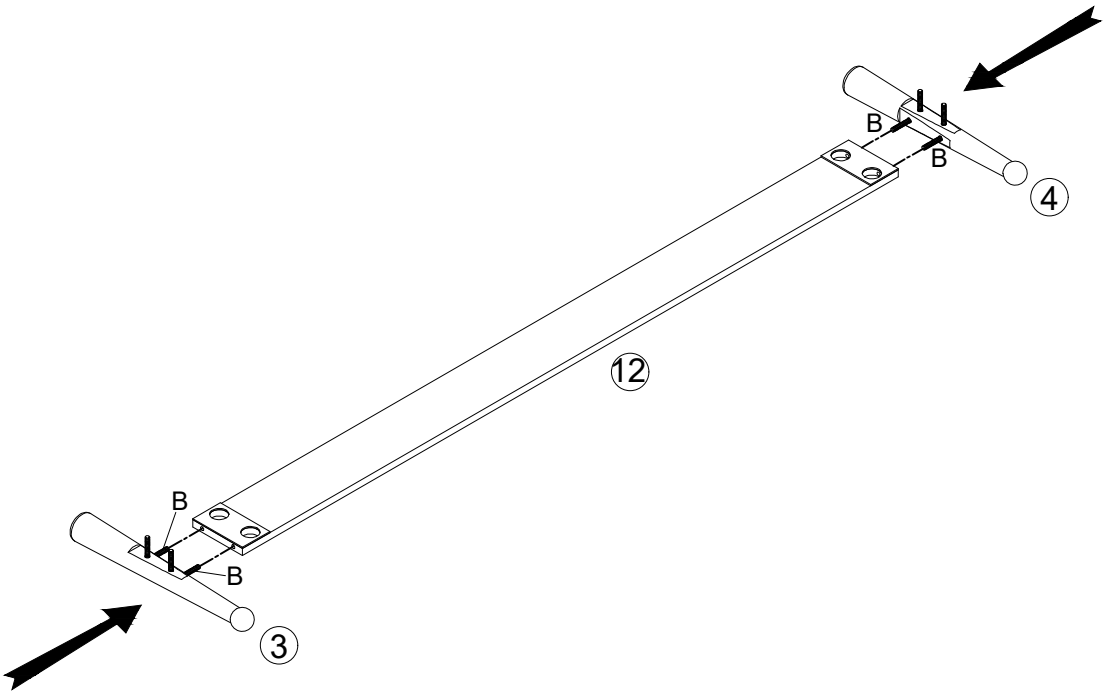

Gently thread the Double-threaded bolts Ⓑ of the Leg - left (Footboard) ③ & Leg - right (Footboard) ④ into Footboard ⑫ .

STEP 7

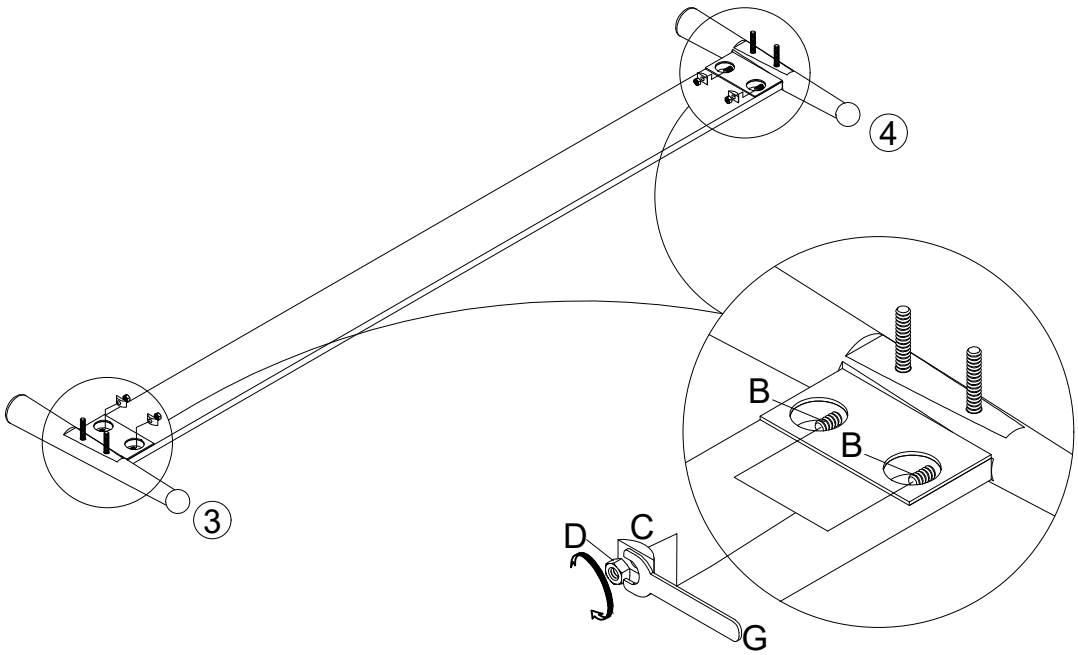

Using 4 pcs Semicircular washer Ⓒ & 4 pcs Hexagonal nut Ⓓ and Wrench Ⓖ to attach to the Double-threaded bolts Ⓑ of the Leg - left (Footboard) ③, Leg - right (Footboard) ④.

STEP 8

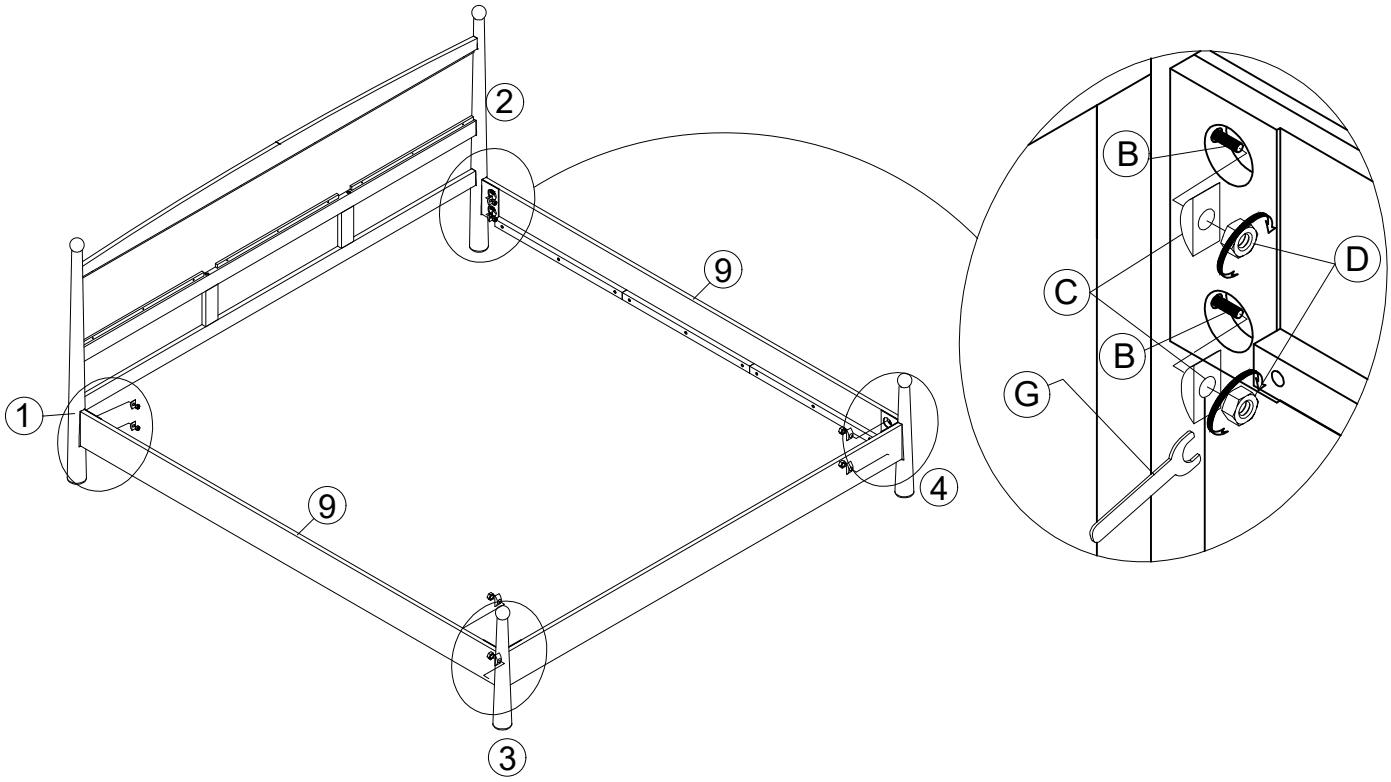

Attach the Side rails⑨to Leg - left (Headboard)①& Leg - right (Headboard)②and Leg - left (Footboard)③ & Leg - right (Footboard)④ using 8 pcs Semicircular washerⒸand 8 pcs Hexagonal nutⒹto attach the Double-threaded boltsⒷ. Use WrenchⒼto tighten.

STEP 9

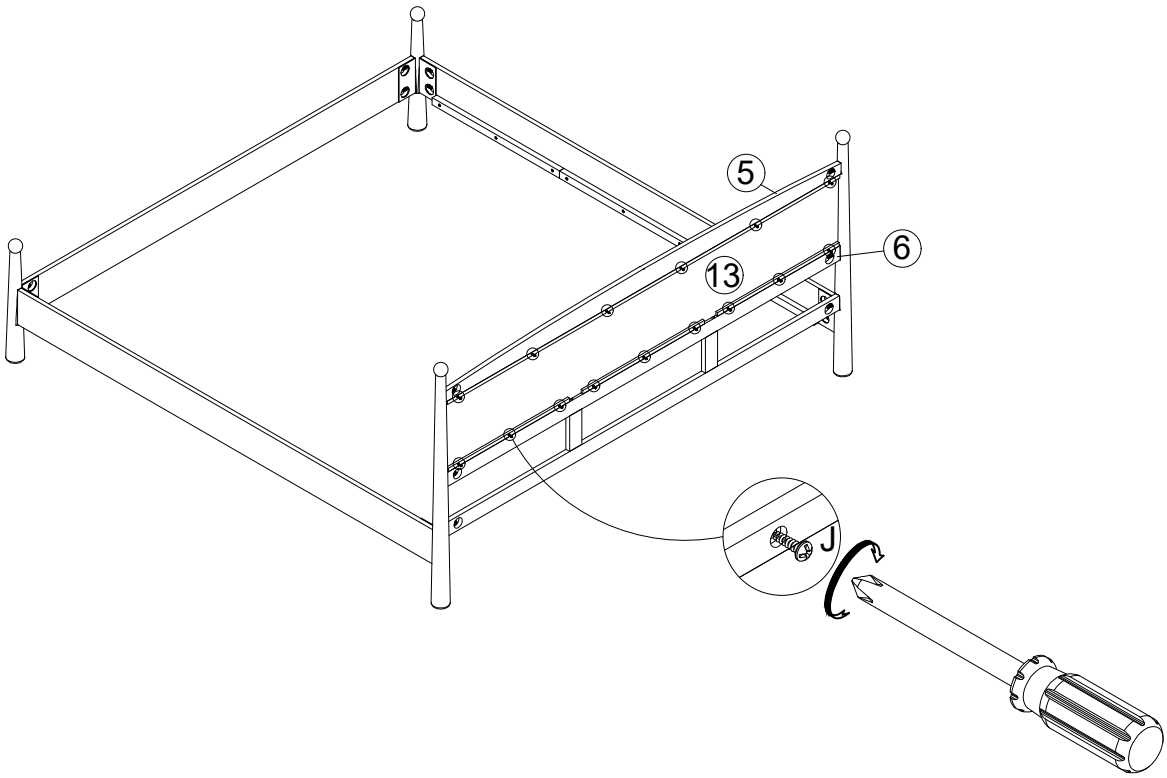

Attach Cushion ⑬ between the Top bar⑤& Middle bar⑥, using 15 pcs Round head screwsⒿto tighten them.

STEP 10

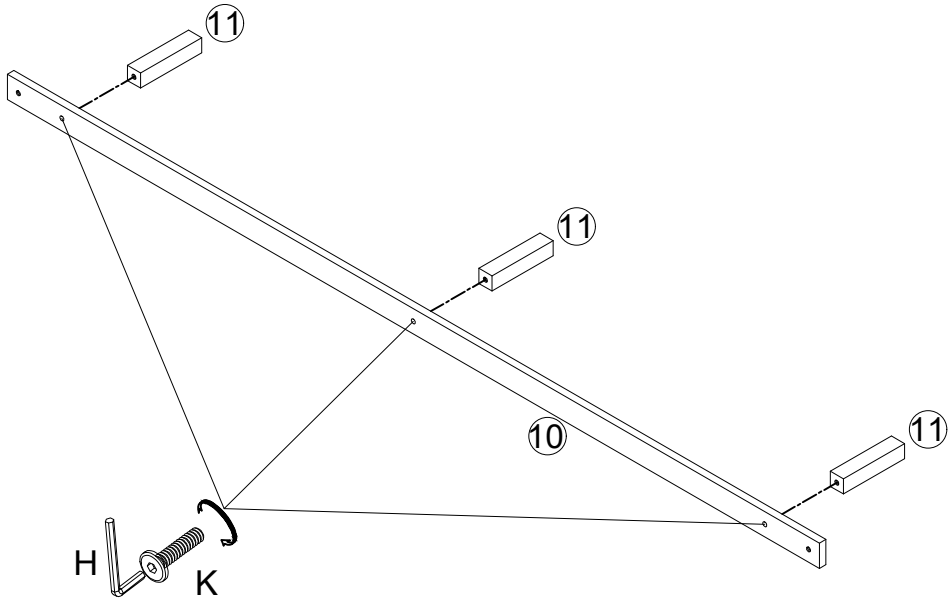

Attach 3 pcs Middle leg ⑪ to the Middle support bar ⑩ using 3 pcs Bolts Ⓚ and Allen Wrench Ⓗ to tighten them securely.

STEP 11

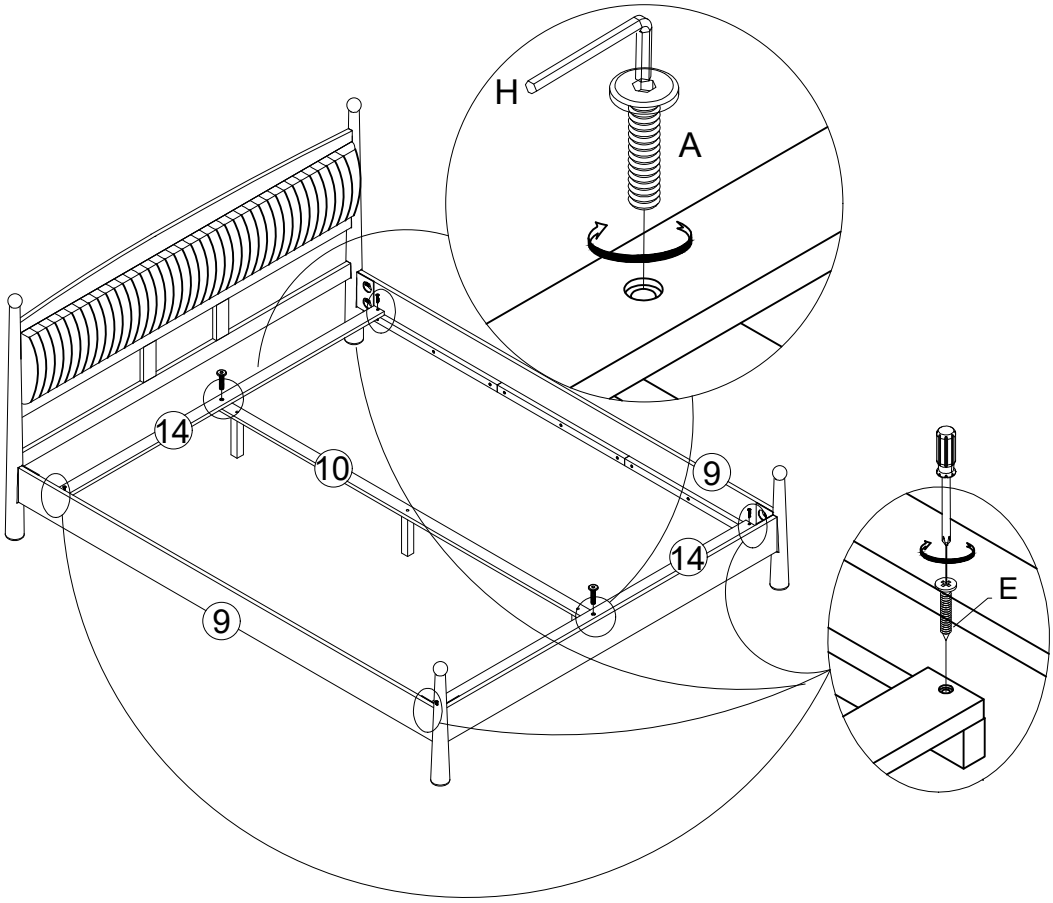

Attach Outer slats ⑭ to the Middle support bar ⑩ using 2 pcs Bolts Ⓐ and Allen Wrench Ⓗ. Then place Outer slats ⑭ on the Side rails ⑨. Use 4 pcs Wood screws Ⓔ to tighten.

STEP 12

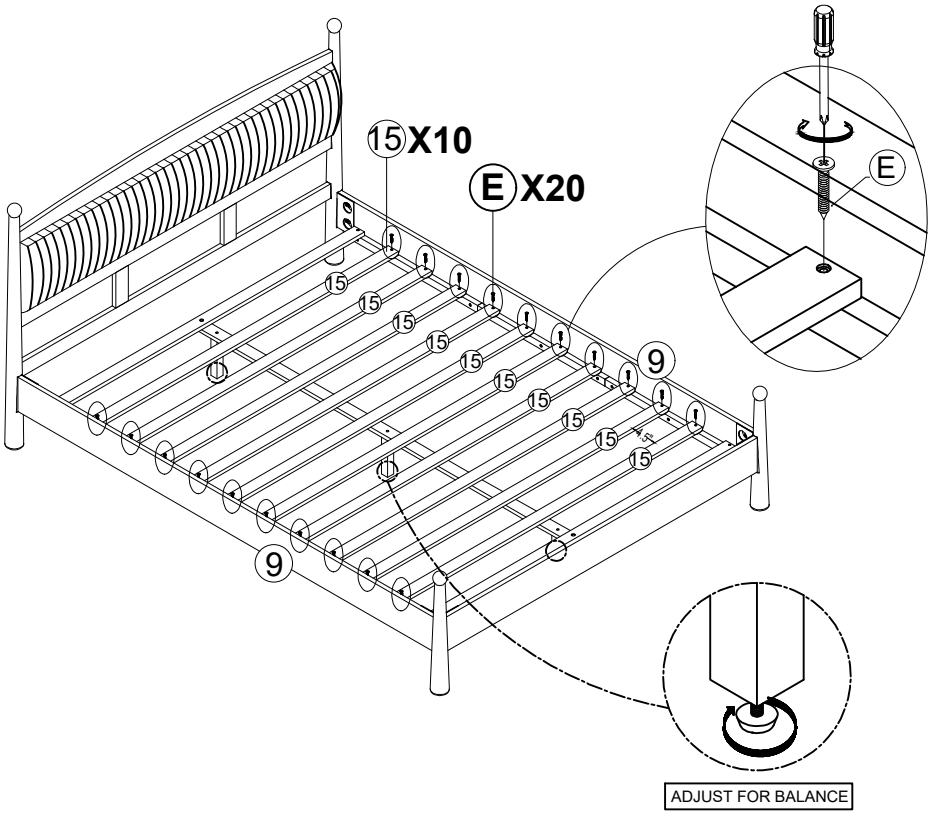

Attach Slats 15 to Side rails 9 in the correct spacing, using 20 pcs Wood screws E to tighten them.

NOTE : that the middle leg can be adjusted to suit the position of your floor.

COMPLETED

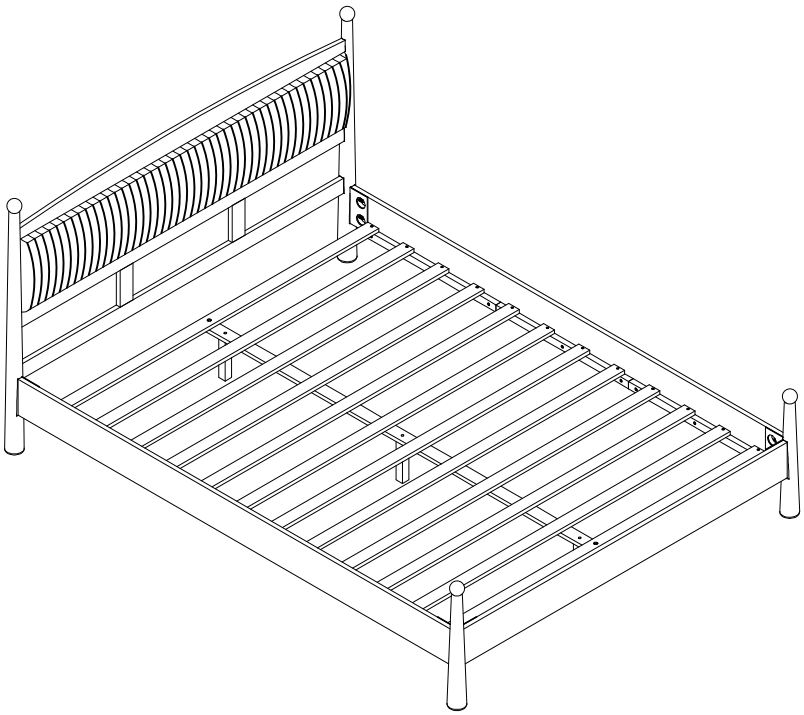

Inspect the Bed an make sure all parts are adequately connected.
Adjust the Levelers to desired height to avoid wobbles.
Your bed is ready for use.

CARE INTRUCTIONS:
Hardware may loosen overtime. Periodically check that all connections are tight.
Wipe with a soft , dry cloth . To protect finish , avoid the use of chemicals and household cleaners.