B-2DSL60-60 (56"-60" width, 60" height)

Shower Enclosure Installation Guide

Polaris Square Double Slider Bathtub Enclosure

Read all Instructions Prior to Installation.
Professional Installation Required.

GLASSWAREHOUSE

Contents

Important Safety Information 4

What is Included in Your Install Kit 6

Installation Tools 7

Pre-Installation Steps 8

Installation Steps 12

Thank You 29

Hardware Care & Maintenance 30

Glass Care & Maintenance 31

Warranty 34

LA BRUNET

WARNING!

Important Safety Information

Read Before Installing

- To reduce risk of injury, this product must be installed by a professional or by an individual experienced in glass installation and familiar with the structural and safety requirements of this type of project.
- Do **NOT** attempt to lift or carry a large glass panel alone. To prevent injury or damage, always use assistance and/or professional-grade suction cups to safely position and secure the glass.
- Always handle tempered glass with extreme care. To reduce risk of breakage, do **NOT** lean, rest, or apply force to installed or uninstalled glass panels.
- Glass Warehouse reserves the right to modify, improve, or redesign any product at any time, without prior notice, to enhance performance or user safety.
- The safety of the installation is the sole responsibility of the installer.
- Some installations require drilling into the threshold or tile. Always consult the manufacturer of your base or tile material before drilling.
- Illustrations and diagrams in this guide are for reference only and are not to scale.

Tempered Glass Safety Warning

Tempered glass can shatter without warning if mishandled, installed incorrectly, or subjected to stress.

Do NOT install or use any glass panel that:

- Has chipped corners, slivered edges, or visible damage.
- Has been dropped or impacted against any hard surface (tile, marble, glass, etc.).

Primary causes of tempered glass breakage include:

- Improper handling, storage, or installation.
- Missing or misaligned hardware, gaskets, or brackets.
- Excessive pressure or impact on glass edges or corners.
- Loose rollers or moving parts, misaligned brackets or hardware, or overtightened fittings.
- Aggressive operation or misuse (slamming, leaning, or hanging on panels).

Even small imperfections or misalignment can cause delayed spontaneous breakage, hours or days later, due to stress concentration on the glass edges.

If damage is suspected, discontinue use immediately and contact Glass Warehouse customer service.

Installation & Preparation

- Carefully inspect all packaging before beginning installation. Verify all parts are present using the product diagram and report any missing or damaged components within 30 days of delivery.
- Glass Warehouse will not replace damaged or missing components after this period or once installation has begun.
- Check that walls are plumb, level, and square before installing. Improper wall angles or uneven thresholds can cause stress on the glass and result in product failure.
- Always install against finished (tiled) walls and thresholds only.
- If installing into a fiberglass enclosure always mount panel-supporting hardware to studs.
- Protect all glass surfaces during installation – never place glass directly on tile or concrete. Keep corner protectors in place until panels are ready to be installed.
- Always wear appropriate personal protective equipment (PPE) – safety glasses, gloves, and non-slip footwear.

Safety & Maintenance

WARNING: To reduce risk of injury or death:

- Read and follow all installation instructions.
- Do **NOT** use non-Glass Warehouse provided component parts for installation.
- Do **NOT** allow children to play with, hang from, or slam the sliding door.
- Do **NOT** lean or push against the glass panels at any time.
- Inspect all glass and hardware regularly for signs of loosening, corrosion, or misalignment. Tighten or replace as necessary.

NOTICE: To reduce risk of damage associated with water leaks:

- Use mild, non-abrasive cleaners only. Avoid acids, bleach, or harsh chemicals.
- Replace any damaged or missing seals immediately to prevent leaks and maintain structural integrity (see contact information below).
- Always allow 36 hours minimum for silicone to cure before using the shower.

WARNING!

Important Safety Information

(Continued)

Risk of Injury or Death

Glass Warehouse assumes no responsibility for injury or property damage resulting from:

- Improper installation or modification of components
- Failure to follow the instructions provided
- Use of damaged or misaligned glass panels
- Neglect or improper maintenance

Install Guide Legend

DANGER	Indicates a hazardous situation that, if not avoided, will result in death or serious injury.
WARNING	Indicates a hazardous situation that, if not avoided, could result in death or serious injury.
CAUTION	Indicates a hazardous situation that, if not avoided, could result in minor or moderate injury.
NOTICE	Indicates practices not related to personal injury.
✓	Indicates recommended practice / correct method.
⊘	Indicates not recommended practice / incorrect method.

**All drawings in this installation manual are for illustrative purposes only and are not drawn to scale.*

Have Questions? Need Some Help?

Contact Us!

Email: inquiries @ GlassWarehouse.us
Phone: (760) 536-3640

Hours of Operation:

Monday - Thursday: 8:00AM - 5:00PM PST
Friday: 8:00AM - 4:00PM PST
Saturday: 8:00AM - 12:30PM PST

About Our Glass

Highest Standard Glass Panels

Our glass panels exceed most manufacturers standard height and thickness, providing extra protection against overspray and splashing and ensuring long-term durability.

Tempered Safety Glass

Manufactured to SGCC standards with ANSI Z97.1, 16 CFR 1201 & CGSB 12.1 certification. This tempering process makes our shower doors extremely resilient and extra strong.

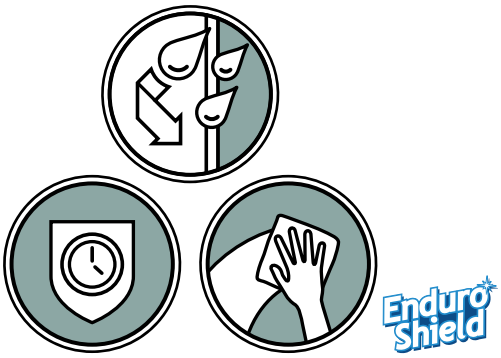

Protective Glass Coating

Glass treated with ENDURO SHIELD®, the revolutionary non-stick treatment that repels soap scum, grime, dirt, and reduces cleaning time by up to 90%.

What is Included in Your Install Kit

Your Order Will Ship in 3 Boxes

Box 1 of 3

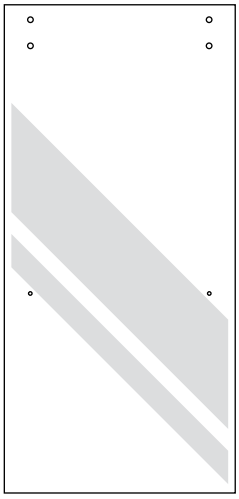

A. Slider Panel (1)
(B-2DSL60-60)

Installation Guide

Box 2 of 3

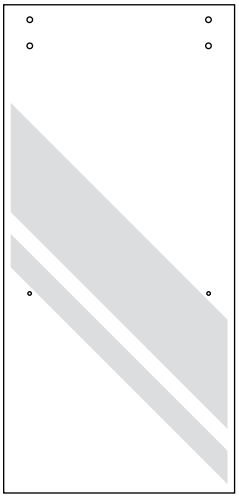

A. Slider Panel (1)
(B-2DSL60-60)

Box 3 of 3

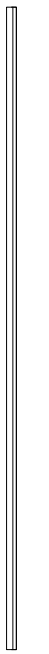

C. Bulb Seal (2)

D. L-Shaped Jamb Seal (2)

E. Bottom Sweeps With dip Rails (2)

F. Shower Rod (1)

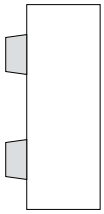

B. Slider Panel Stoppers (2)
On Shower Rod

G. Single Sided Towel Bars (2)

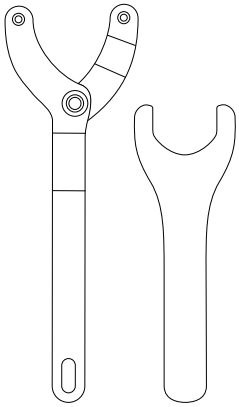

H. Tool Kit

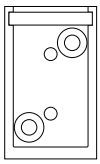

I. Shower Rod Brackets (2)

J. Bottom Bracket (1)

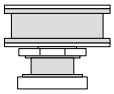

K. Slider Panel Roller Guides (8)

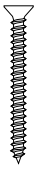

L. Long Screw (4)

M. Short Screw (2)

N. Wall Anchors (6)

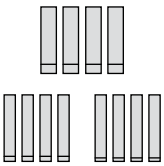

O. Rubber Blocks (12)

P. Wall-Side Knob (2)

Installation Tools

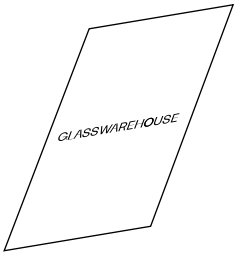

T1. Cardboard Packaging

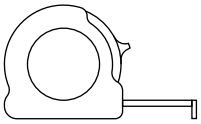

T2. Measuring Tape

T3. Pencil

T4. Long Level

T5. Level

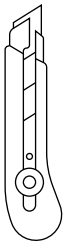

T6. Utility Knife

T7. Phillips Head Screwdriver

T8. Flat Head Screwdriver

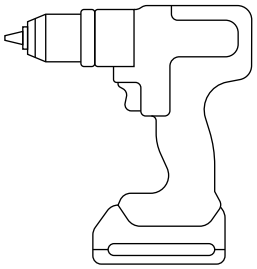

T9. Drill

⅛" or 3.2mm

T10. ⅛" Drill Bit

¼" or 6.4mm

T11. ¼" Drill Bit

⅛" or 3.2mm

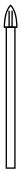

T12. ⅛" Tile Drill Bit

¼" or 6.4mm

T13. ¼" Tile Drill Bit

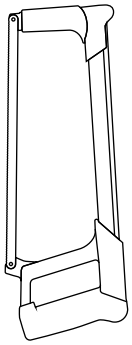

T14. Hacksaw

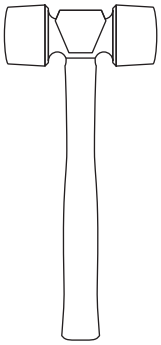

T15. Rubber Mallet

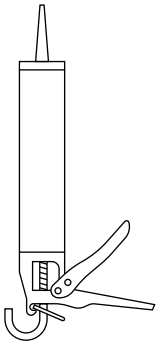

T16. Silicone

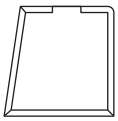

T17. Spatula

T18. Spray Bottle

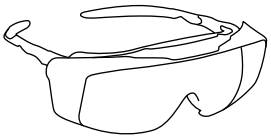

Safety Goggles

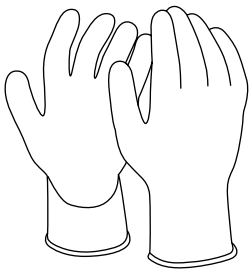

Cut Resistant Gloves

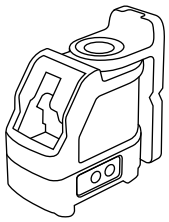

Laser Level (optional)

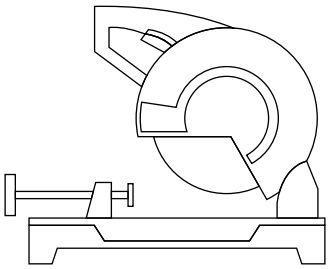

Chop Saw (optional)

Pre-Installation Steps

WARNING

Check Before You Install: Failure to complete all checks may result in improper installation, poor product function, and/or structural instability.

Threshold Drilling Required: Installation of this product requires drilling into the threshold. Ensure you are prepared to complete this step before beginning installation. Failure to do so may prevent proper installation.

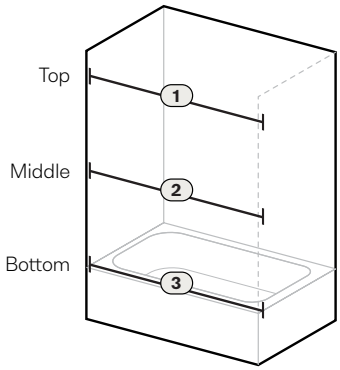

Identify shortest measurement of the three. This is the measurement for your opening.

Figure 1.1 - Shower opening measurements

01

Before beginning installation, complete the following checks to ensure proper fit and assembly.

a. Measure the width of your shower opening at the **Top**, **Middle**, and at the **Bottom**.

b. Compare the three measurements and identify the **Shortest Opening Measurement.** This is the only measurement that should be used for sizing confirmation. (Fig. 1.1)

c. **Confirm Model Size** - Measure your opening and verify that you have received the correct model for your shower opening. Refer to the table below to confirm the model number corresponds with your measured width range:

Model	Adjustable Width	Door Panel Size	Door Panel Size	Opening Width/ Walkthrough	Height
B-2DSL-60	56" - 60 1/4"	31" x 60 ⅝"	31" x 60 ⅝"	24" - 28"	60"

Table 1.1 Polaris Double Slider Adjustable Width & Panel Sizes

d. **Verify Threshold Width** - If your shower installation features a raised threshold, the completed threshold must be a minimum width of **3"** or this model will not fit your space. (Fig. 1.2)

e. **Confirm Installation Requirements** - This installation requires drilling into the threshold. Verify you are able to complete this step before proceeding. (Fig. 1.3)

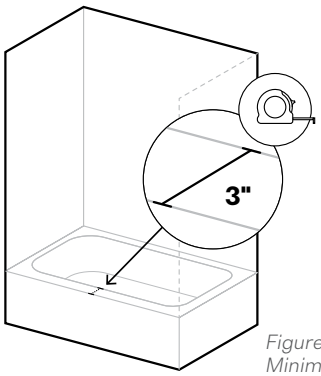

Figure 1.2 Polaris Double Slider Minimum Threshold Width

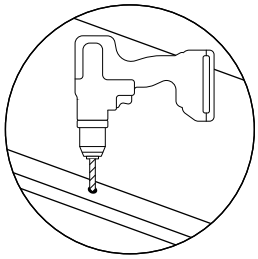

Figure 1.3

Determine Installation Side

a. Decide which side of your shower will receive the Interior Slider Panel Stopper (**B.**). Glass Warehouse highly recommends positioning the Interior Slider Panel on the same side as the shower head to help minimize water escaping through the gap between the glass panels.

1. If your shower head is on the left, install the Interior Slider Panel Stopper (**B.**) on the right side of the Shower Rod (**F.**) on the inside track. The Interior Slider Panel (**A.**) will be installed on the left side of the enclosure.

2. If your shower head is on the right, install the Interior Slider Panel Stopper (**B.**) on the left side of the Shower Rod (**F.**) on the inside track. The Interior Slider Panel (**A.**) will be installed on the right side of the enclosure.

1.

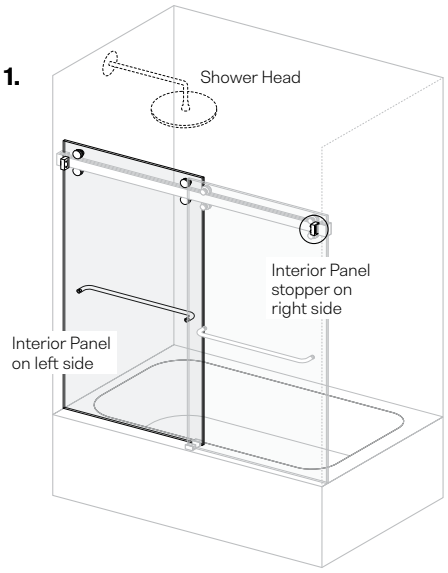

2.

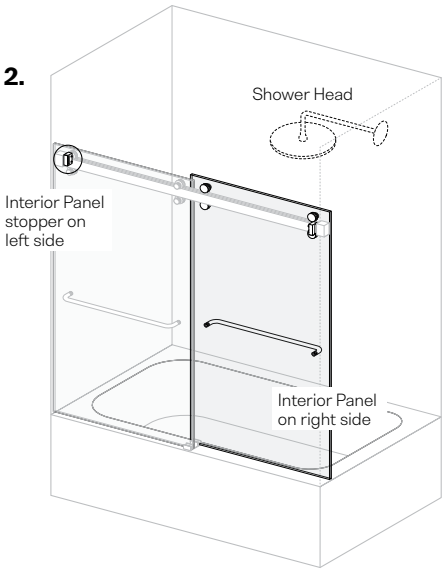

WARNING

Only Use Parts Supplied by Glass Warehouse: Use only components and hardware supplied by Glass Warehouse. Substituting or modifying parts may compromise structural integrity, void the warranty, and/or result in improper installation.

02

Inspect all components

a. Unpack the enclosure and verify that all required components and hardware are included according to the parts list. Verify that all parts are complete. (e.g., grub screws have rubber tips, plastic inserts are included with Bottom Bracket, correct number of screws included, etc.).

b. If any parts are missing or damaged, or if you cannot drill into threshold,
DO NOT BEGIN INSTALLATION.

Contact Glass Warehouse Customer Support for assistance and replacement parts.

Have Questions? Need Some Help?

Contact Us!

Email: inquiries@GlassWarehouse.us
Phone: (760) 536-3640

WARNING

Check Before You Install: Skipping this Installation Guide or failing to review all instructions may lead to incorrect assembly, product damage, glass breakage, serious injury, or death.

03

Review Installation Guide.

a. Do not begin installation until you have thoroughly reviewed this Installation Guide. It contains critical safety, measurement, and alignment information required for a successful installation. Review all instructions before beginning installation.

WARNING

Save Cardboard Packaging for Installation: Always place glass panel on cardboard or other protective surfaces during installation. Failure to use protective surfaces can cause glass to chip, crack, or shatter, creating sharp edges. Improper handling of glass can result in death or serious injury.

04

Save cardboard packaging.

a. When opening the Slider Panel (**A.**) packaging, carefully remove all components but Do **NOT** discard the cardboard packaging. It provides essential protection for the glass panels during installation. Do **NOT** place glass directly on tile, concrete, or other hard surfaces. This can result in chipping, cracking, or breakage that is not covered under warranty.

Installation Steps

WARNING

Use Two People: Always use two people and handle tempered glass panels carefully. Improper lifting or installation can cause shattering, serious injury, or death.

Check Before You Install: Failure to complete all checks may result in improper installation, poor product function, and/or structural instability.

NOTICE

Minimum Threshold Width: The threshold must be a minimum of **3"** wide to properly install this shower enclosure.

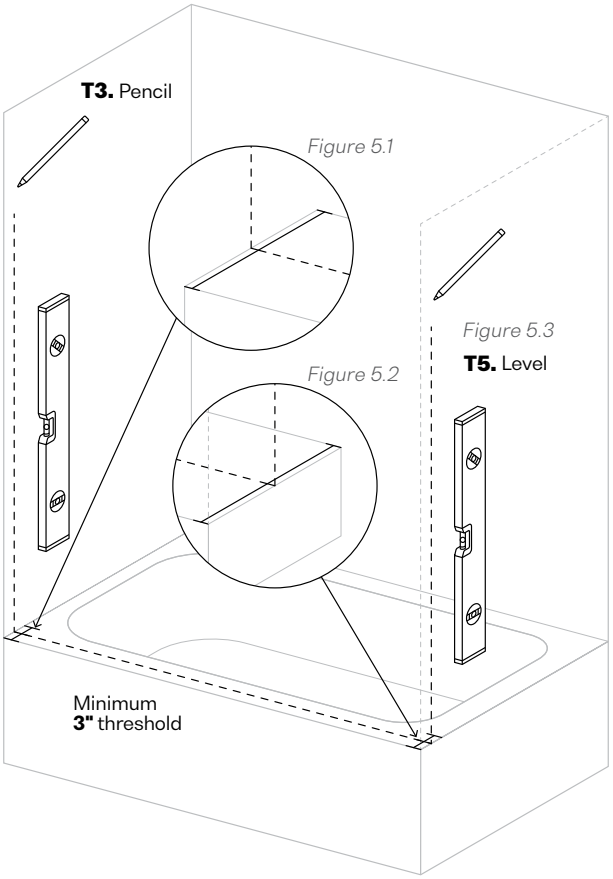

05

Mark Threshold and Walls for Shower Rod Position

a. Measure the width of the threshold where the shower enclosure will be installed. Verify the threshold is a minimum of **3"** wide to accommodate this model (Fig. 5.1 and Fig. 5.2).

b. Measure to the center of the threshold and mark the location with a Pencil (**T3.**) (Fig. 5.1 and Fig. 5.2).

c. Using a Level (**T5.**), draw a vertical line up both walls from the center mark (Fig. 5.3).

WARNING

Out-of-Level Threshold: Installing this enclosure on a threshold that is out of level by more than **⅜"** may result in improper door operation, glass breakage, serious injury, or death.

NOTICE

Reversible Installation: This enclosure is fully reversible and the installation can begin on either the right or left wall.

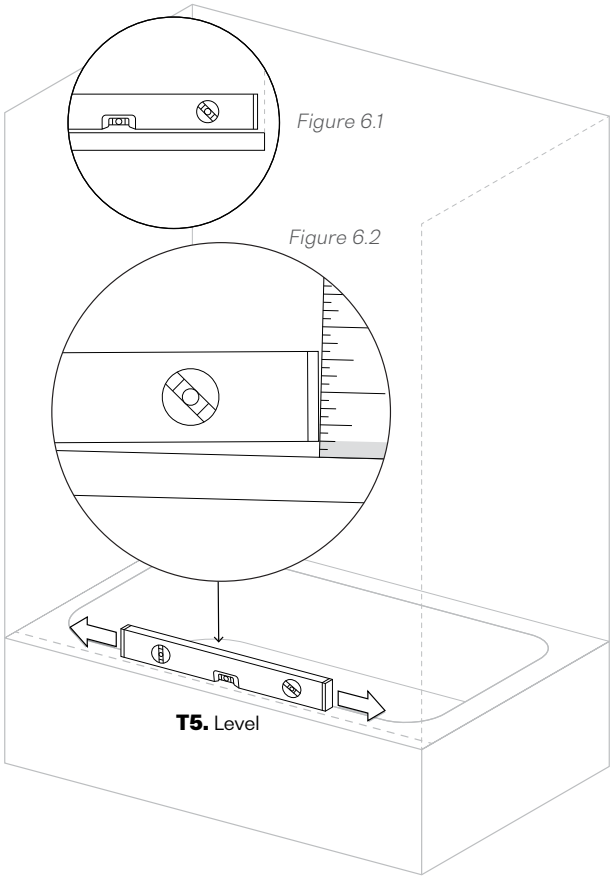

06

Check Threshold Level

a. Using a Level (**T5.**), verify the shower threshold is level across the installation area (Fig. 6.1).

b. If the threshold is level, proceed to **Step 8** (Fig. 6.1).

c. If the threshold is out of level by **⅜"** or less, place the Level (**T5.**) on the threshold and measure the height difference between the high side and low side of the threshold (Fig. 6.2).

d. Record the height difference measurement and proceed to **Step 7**.

e. If the threshold is out of level by more than **⅜"**, do not proceed with installation. Contact Glass Warehouse at **inquiries@glasswarehouse.us**.

NOTICE

Threshold Compensation: When the threshold is out of level, measurements must be adjusted so the Shower Rod Brackets install level.

Tip: For easy removal, marking with a pencil is recommended

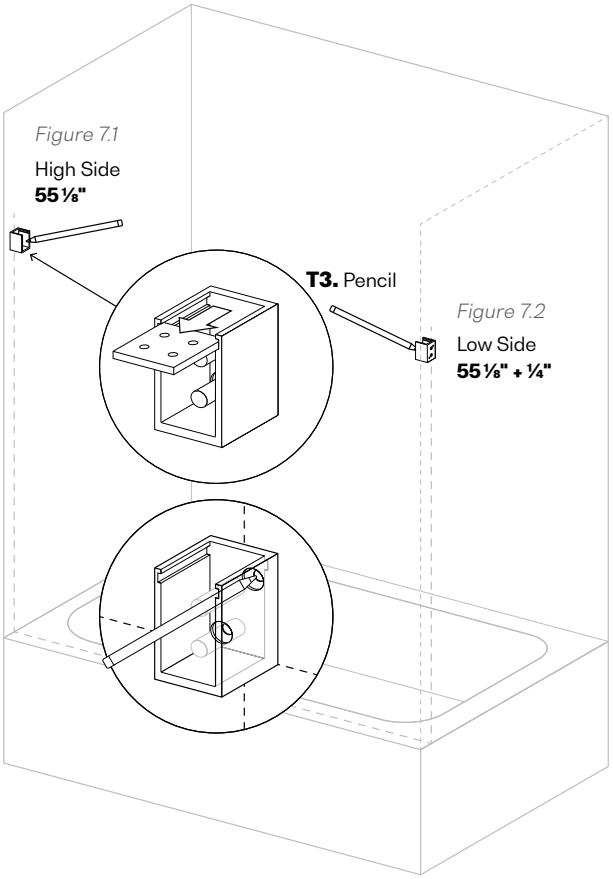

07

Mark Shower Rod Bracket Installation Positions (Out-of-Level Threshold)

a. Measure **55⅛"** up from the threshold on the high side and mark the wall with a Pencil (**T3.**) (Fig. 7.1).

b. On the low side, measure **55⅛"** plus the height difference recorded in **Step 6** and mark the wall (Fig. 7.2).

c. Position the Shower Rod Bracket (**I.**) centered on the vertical reference line at each marked location (Fig. 7.1 & 7.2).

d. Using a Pencil, mark the wall through both mounting holes in each Shower Rod Bracket.

Example: If the low side of the threshold is **¼"** lower than the high side, mark the low side wall at **55⅜"** from the threshold (Fig. 7.2).

WARNING

For Fiberglass Walls: A stud must be directly behind where the Shower Rod Brackets will be installed. Failure to properly support the enclosure may result in enclosure instability and/or glass breakage.

NOTICE

Bracket Position: Ensure both Shower Rod Brackets are positioned at the same elevation before drilling. Improper bracket placement may affect Shower Rod alignment and door operation.

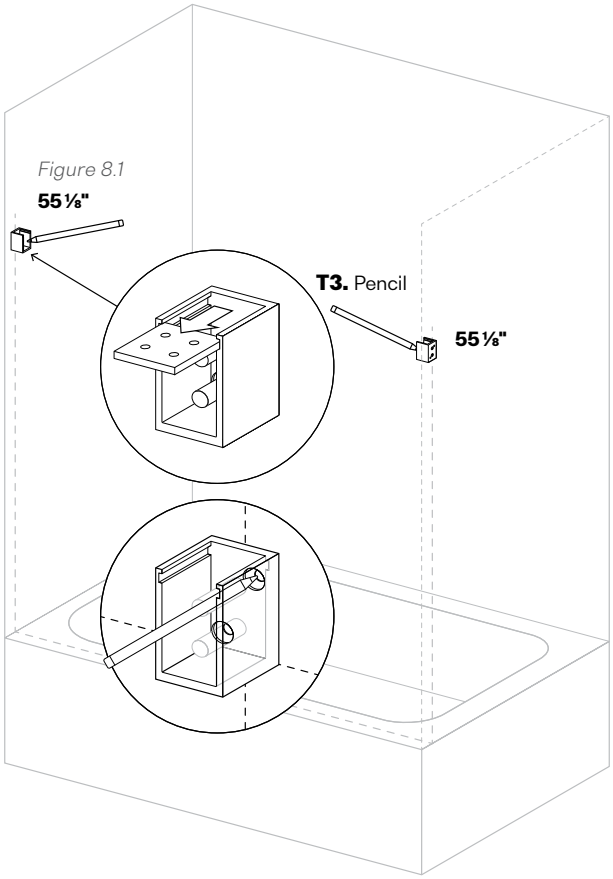

08

Mark Shower Rod Bracket Installation Positions (Level Threshold)

a. Measure **55⅛"** up from the threshold on both walls and mark each location with a Pencil (**T3.**) (Fig. 8.1).

b. Verify both marks are at the same height before proceeding.

c. Position the Shower Rod Bracket (**I.**) centered on the vertical reference line at each marked location (Fig. 8.1).

d. Using a Pencil, mark the wall through both mounting holes in each Shower Rod Bracket (**I.**).

Tip: For easy removal, marking with a pencil is recommended

WARNING

For Fiberglass Walls: A stud must be directly behind where the Shower Rod Brackets will be installed. Failure to properly support the enclosure may result in enclosure instability and/or glass breakage.

NOTICE

Pilot Hole: A **⅛"** tile drill bit can be used to create pilot holes for a tiled enclosure, but this is optional.

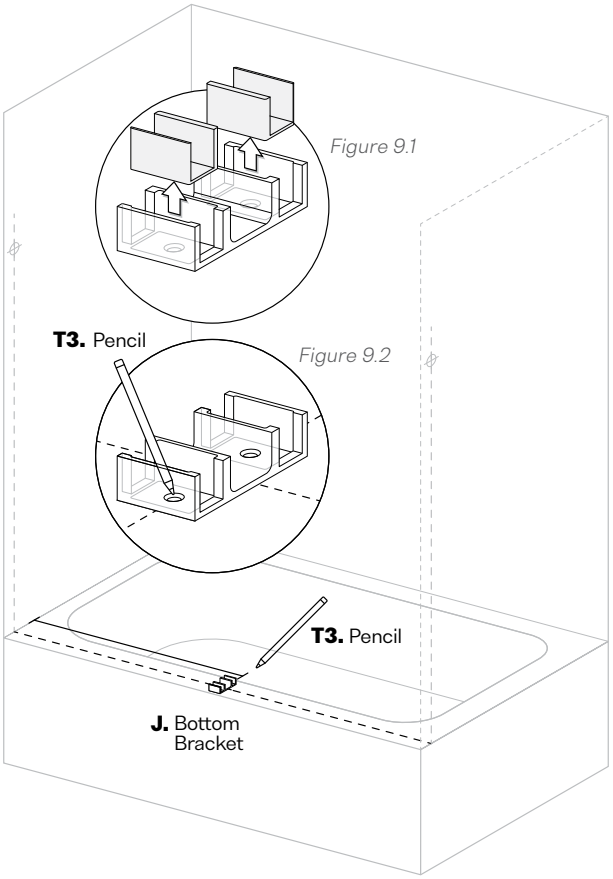

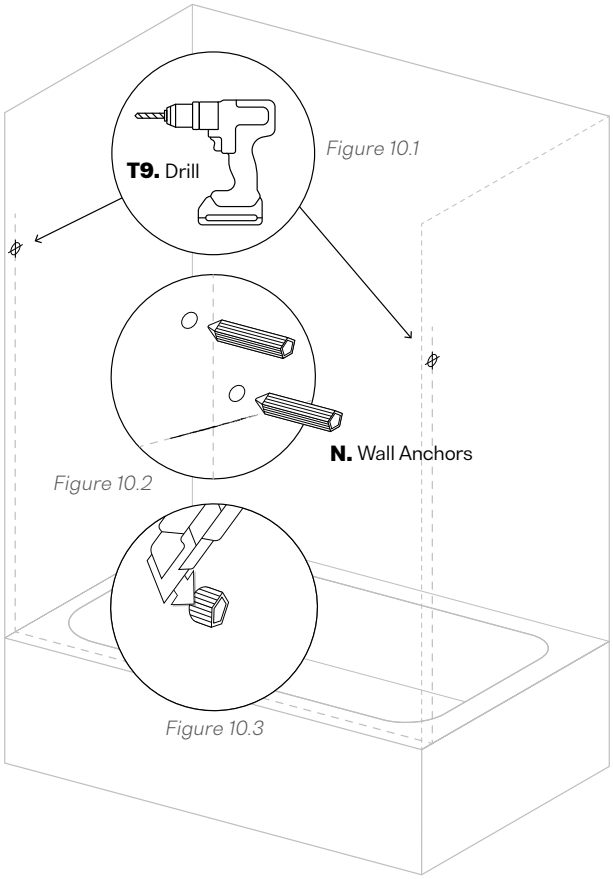

09

Mark Drill Holes for Bottom Bracket

a. Measure the width of the shower opening and determine the exact center point of the threshold.

b. Mark the center point on the threshold using a Pencil (**T3.**).

c. Position the Bottom Bracket (**J.**) so it is centered on the marked line.

d. Remove the plastic inserts from the Bottom Bracket (Fig. 9.1).

e. Using a Pencil, mark the threshold through both mounting holes in the Bottom Bracket (Fig. 9.2).

Example: If your shower opening is **58"**, mark the threshold at **29"**. This will be the center point for the Bottom Bracket installation.

10

Drill Holes for Shower Rod Brackets

a. Using the appropriate **¼"** drill bit for your installation surface, drill the marked mounting holes for the Shower Rod Brackets (**I.**) (Fig. 10.1).

b. Insert the supplied Wall Anchors (**N.**) into the drilled holes until fully seated (Fig. 10.2).

c. Using a Utility Knife (**T6.**), trim any excess Wall Anchor material protruding from the wall so the Shower Rod Brackets sit flush against the wall (Fig. 10.3).

d. For fiberglass walls, use a **⅛"** Drill Bit (**T10.**) to drill the mounting holes.

e. Do not use the Wall Anchors when installing into fiberglass walls. Secure the Shower Rod Brackets directly to the fiberglass wall using the supplied screws.

NOTICE

For Fiberglass Shower Bases: Use a **⅛"** Drill Bit to pre-drill the mounting holes. Do not use the Wall Anchors when installing the Bottom Bracket into a fiberglass shower base.

Waterproofing: Fill all drilled holes with Silicone before installing the Bottom Bracket to help prevent water intrusion.

NOTICE

Shower Rod Bracket Top Covers: Remove the Top Covers prior to installation. The Top Covers will be reinstalled after the Shower Rod has been leveled and secured.

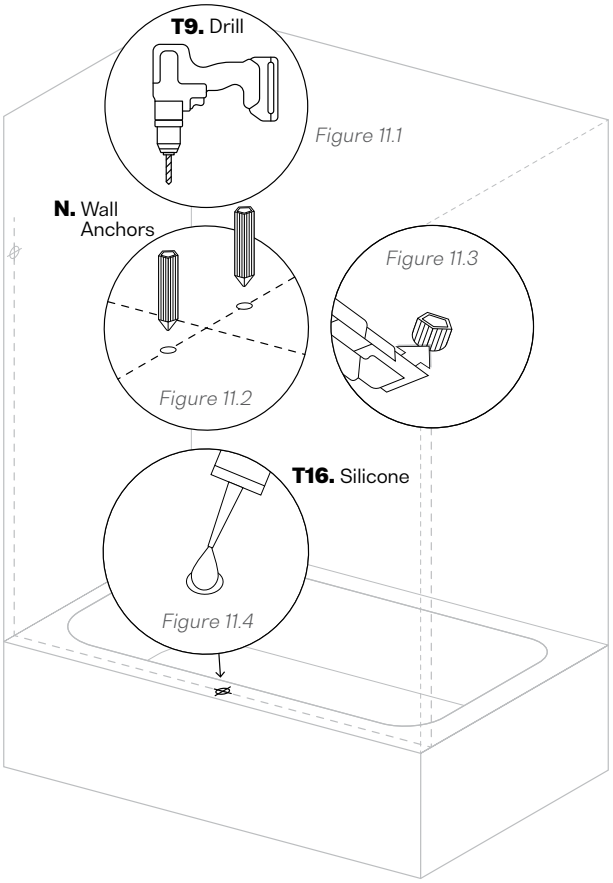

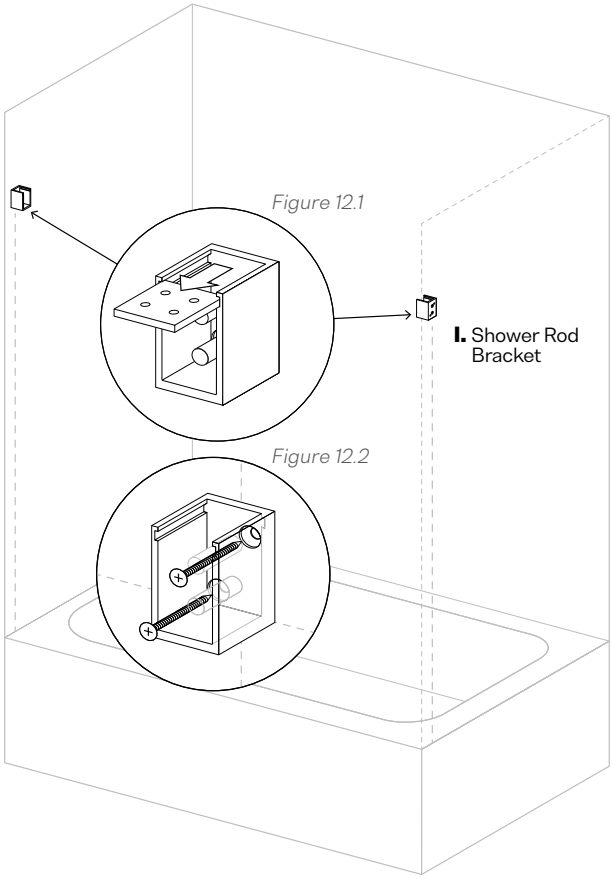

11

Drill Holes for Bottom Bracket

a. Using a **¼"** Drill Bit (**T11.**), drill the marked holes for the Bottom Bracket (**J.**) (Fig. 11.1).

b. Install the Wall Anchors (**N.**) (Fig. 11.2) if required, and trim any excess material flush with the threshold (Fig. 11.3).

c. Fill the holes with Silicone (**T16.**) to waterproof the installation (Fig. 11.4).

d. For fiberglass shower bases, use a **⅛"** Drill Bit (**T10.**) to pre-drill the holes.

e. Do not use Wall Anchors when installing into a fiberglass shower base. Secure the Bottom Bracket directly to the shower base using the supplied screws.

12

Install Shower Rod Brackets

a. Remove the Top Covers from both Shower Rod Brackets (**I.**) (Fig. 12.1).

b. Position the Shower Rod Brackets over the drilled mounting holes (Fig. 12.1).

c. Secure the Shower Rod Brackets to the wall using the supplied screws and Wall Anchors (**N.**) (Fig. 12.2).

d. Confirm both Shower Rod Brackets are securely fastened before proceeding.

NOTICE

Plastic Inserts: Remove the plastic inserts before installing the Bottom Bracket and reinstall them after the Bottom Bracket has been secured.

WARNING

Shower Rod Cutting: Measure carefully before cutting the Shower Rod. Unequal cuts from each end may result in improper fitment, door misalignment, poor operation, or enclosure instability.

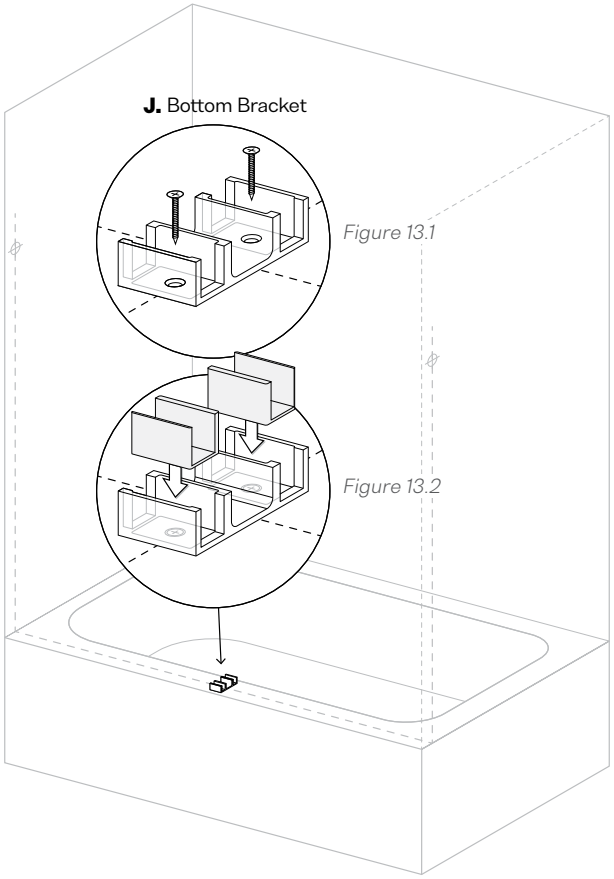

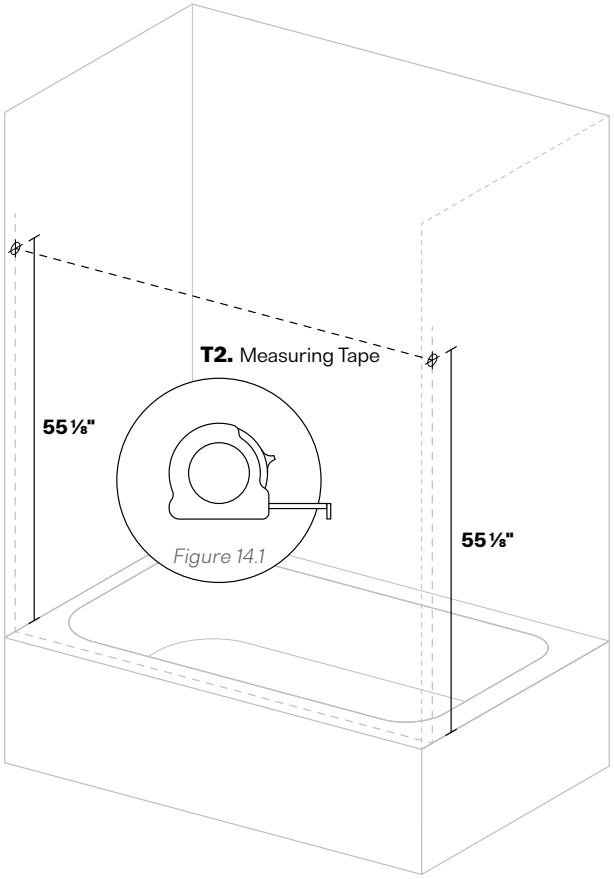

13

Install Bottom Bracket

a. Remove the plastic inserts from inside the Bottom Bracket (**J.**).

b. Position the Bottom Bracket over the drilled holes and secure it using the supplied screws (Fig. 13.1).

c. Confirm the Bottom Bracket is securely fastened to the threshold.

d. Reinstall the plastic inserts into the Bottom Bracket (Fig. 13.2).

14

Measure Shower Rod for Cutting

a. Using a Measuring Tape (**T2.**), measure the shower opening from wall to wall at **55⅛"** above the threshold (Fig. 14.1).

b. Subtract **½"** from this measurement. This is the Final Shower Rod Length.

c. Subtract the Final Shower Rod Length from **73"** (the factory length of the Shower Rod).

d. Divide the result by two. This is the amount to remove from each end of the Shower Rod.

Example: Opening Width = **58"**
Final Rod Length = **57½"**
73" – **57½"** = **15½"**
15½" ÷ **2** = **7¾"**
Remove **7¾"** from each end of the Shower Rod.

WARNING

Eye Protection: Always wear approved safety glasses or safety goggles when drilling, cutting, or trimming materials during installation. Flying debris, metal shavings, and sharp particles may cause serious eye injury

NOTICE

Cut Both Ends of the Shower Rod: The Shower Rod must be cut equally from both ends. A minimum clearance of **2½"** must remain between the end of the Shower Rod and the interior weld. Failure to cut both ends may prevent proper installation and alignment.

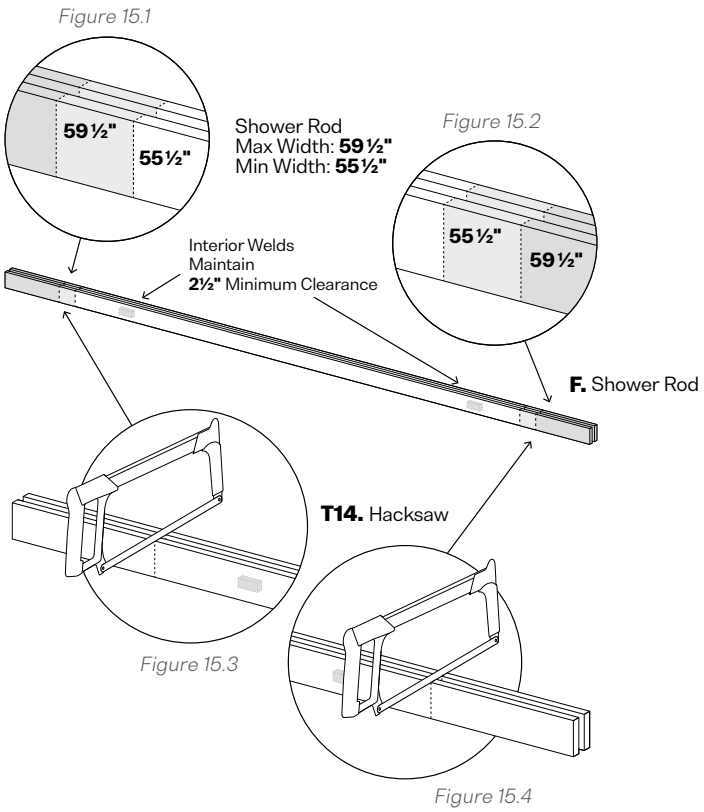

15

Cut Shower Rod

a. Using the measurement calculated in **Step 14**, mark the amount to be removed from each end of the Shower Rod (**F.**) (Fig. 15.1 and Fig. 15.2).

b. Using a Hacksaw (**T14.**) or suitable metal-cutting saw, cut the required amount from both ends of the Shower Rod (Fig. 15.3 and Fig. 15.4).

c. Remove any burrs or sharp edges created during cutting.

d. The Shower Rod is now ready for installation.

NOTICE

Slider Panel Stopper Orientation: Ensure the rubber bumper is positioned to contact the trailing edge of the Slider Panel when the panel reaches the fully open position. Incorrect orientation may prevent proper door stopping and alignment.

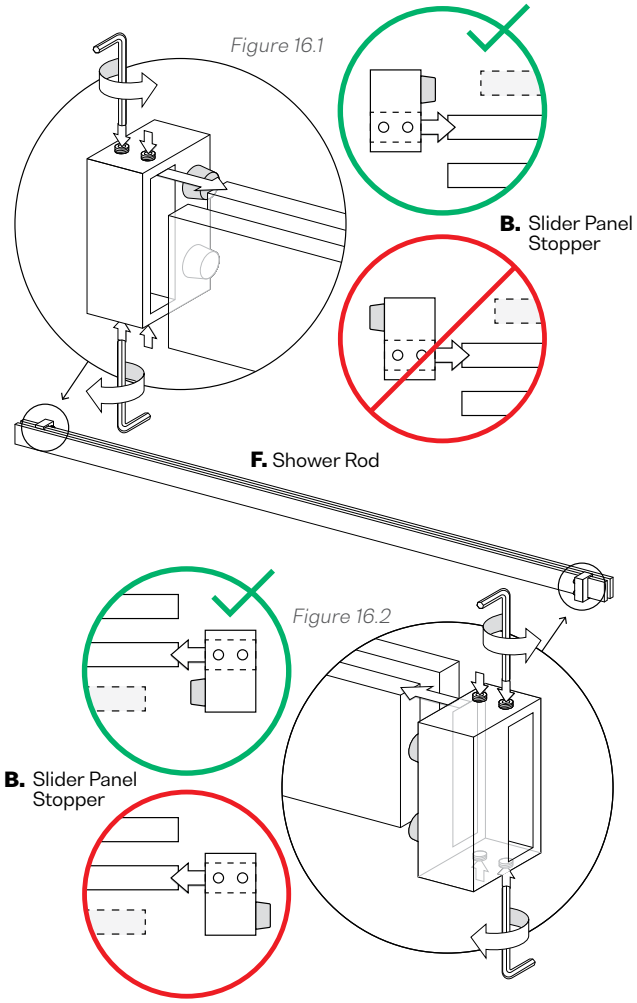

16

Install Slider Panel Stoppers

a. Before installing the Shower Rod (**F.**), slide one Slider Panel Stopper (**B.**) onto each end of the Shower Rod (Fig. 16.1 and Fig. 16.2).

b. Position each Slider Panel Stopper so the rubber bumper will contact the trailing edge of the Slider Panel when the panel reaches the fully open position (Fig. 16.1 and Fig. 16.2).

c. Verify both Slider Panel Stoppers are installed on the correct side of the Shower Rod for the selected door configuration.

d. Leave the Slider Panel Stoppers loose at this time.

e. The Slider Panel Stoppers will be adjusted and secured after the Slider Panels have been installed and final door positioning has been confirmed.

WARNING

Shower Rod Alignment: Ensure the Shower Rod is level before proceeding with glass installation. An unlevel Shower Rod may result in improper door operation, enclosure instability, or glass breakage.

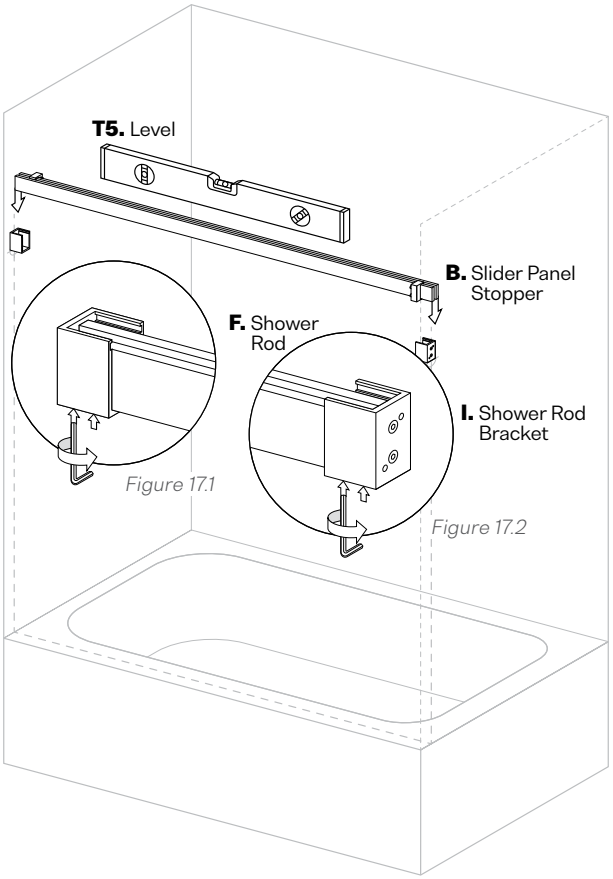

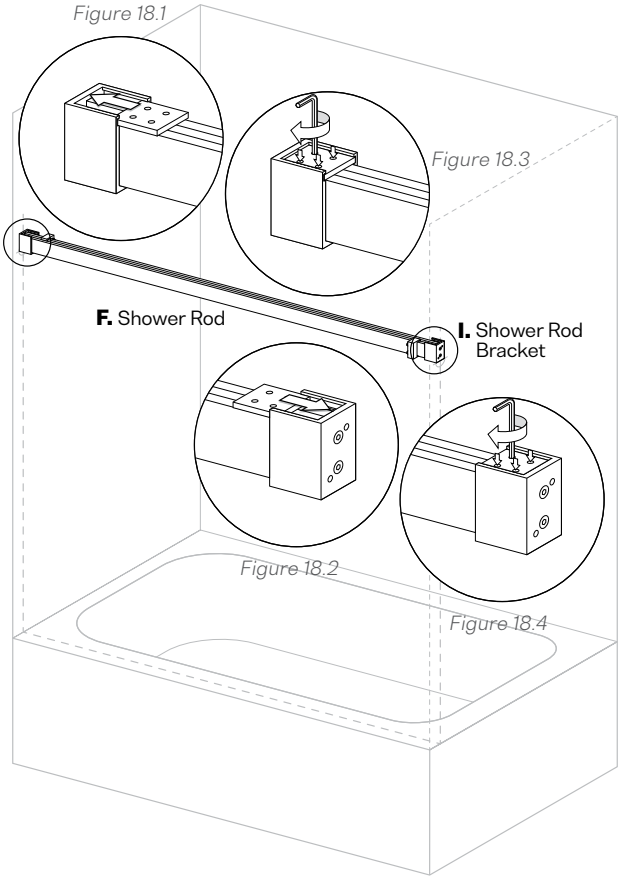

17

Install Shower Rod

a. Remove the Top Covers from both Shower Rod Brackets (**I.**), if not already removed.

b. Install the Shower Rod (**F.**) into the Shower Rod Brackets, ensuring the Slider Panel Stoppers (**B.**) are positioned correctly for the final glass panel configuration (Fig. 17.1 and Fig. 17.2).

c. Using a Level (**T5.**), verify the Shower Rod is level.

d. If adjustment is required, use the set screws on the bottom of the Shower Rod Brackets to level the Shower Rod (Fig. 17.1 and Fig. 17.2).

e. Once adjusted, confirm the Shower Rod is completely level before proceeding.

18

Install Shower Rod Bracket Top Covers

a. Once the Shower Rod (**F.**) is perfectly level, insert the Top Covers into both Shower Rod Brackets (**I.**) (Fig. 18.1 and Fig. 18.2).

b. Tighten the set screws to secure the Top Covers in place (Fig. 18.3 and Fig. 18.4).

c. Verify the Shower Rod remains level after the Top Covers have been installed.

NOTICE

Spanner Wrench Adjustment: If required, use a pair of pliers to adjust the Spanner Wrench so it properly engages the inserts on the Interior Plate.

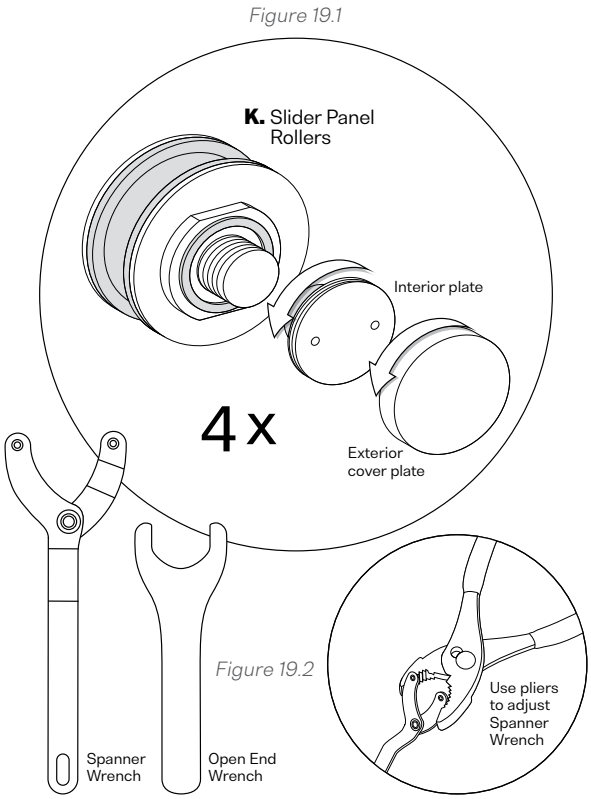

19

Unpack and Disassemble Rollers

a. The Slider Panel Rollers (**K.**) are shipped pre-assembled and must be disassembled prior to installation (Fig. 19.1).

b. Unscrew the Exterior Cover Plate to access the Interior Plate.

c. Unscrew the Interior Plate by hand and separate the Roller components.

d. If necessary, use the supplied Open-End Wrench (**H.**) and Spanner Wrench to loosen the Interior Plate (Fig. 19.2).

e. Repeat this process for all four Roller assemblies.

NOTICE

Roller Orientation: Ensure the flat area of each Roller wheel is parallel to the top edge of the Slider Panel. Incorrect Roller orientation may affect panel alignment and operation.

Lower Rollers: Do not install the lower Rollers at this time. The lower Rollers will be installed after the Slider Panel has been hung on the Shower Rod.

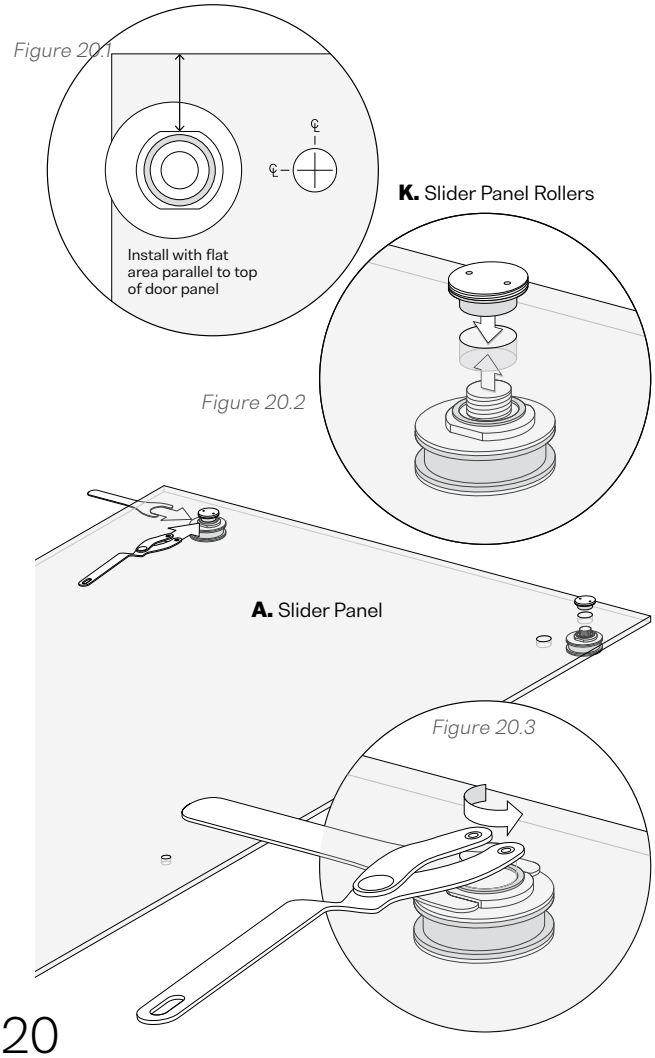

20

Install Top Rollers on Both Slider Panels

a. Install the two upper Rollers (**K.**) into the top mounting holes of the first Slider Panel (**A.**) (Fig. 20.1).

b. Orient each Roller so the flat area of the wheel is parallel to the top edge of the Slider Panel (Fig. 20.2).

c. Tighten the Roller hardware securely (Fig. 20.3).

d. Repeat this process on the second Slider Panel.

NOTICE

Bottom Sweep Orientation: Ensure the sweep lip faces the interior of the shower. Incorrect orientation may affect water retention and enclosure performance.

WARNING

Eye Protection: Always wear approved safety glasses or safety goggles when drilling, cutting, or trimming materials during installation. Flying debris, metal shavings, and sharp particles may cause serious eye injury

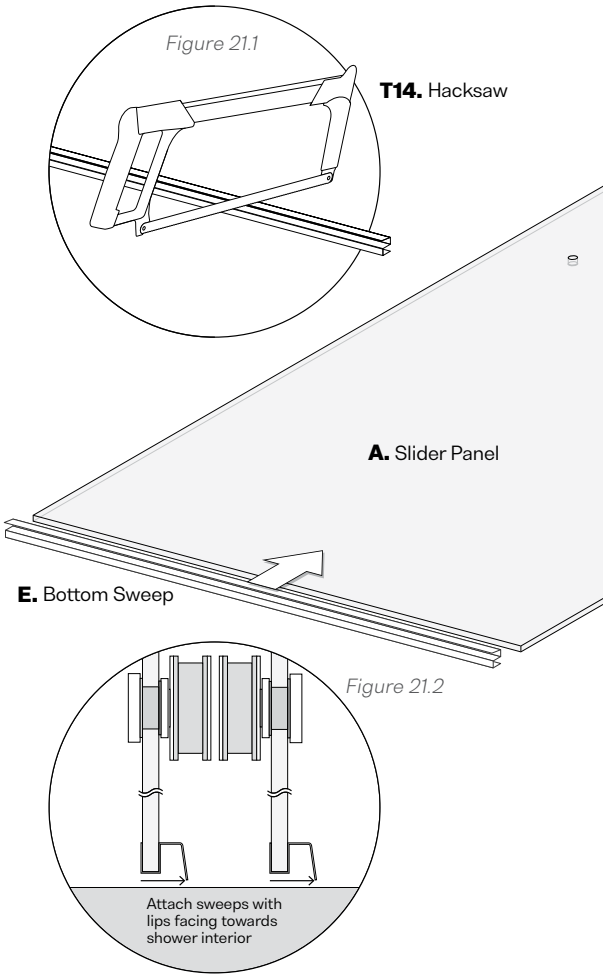

21

Install Bottom Sweeps on Both Slider Panels

a. Measure the width of the first Slider Panel (**A.**).

b. Using a Hacksaw (**T14.**), cut the Bottom Sweep (**E.**) to fit exactly across the bottom edge of the Slider Panel (Fig. 21.1).

c. Install the Bottom Sweep onto the Slider Panel with the sweep lip facing the interior of the shower (Fig. 21.2).

d. Repeat this process on the second Slider Panel.

WARNING

Glass Handling: Ensure the glass does not contact the tile, threshold, or any hard surface while lowering the Slider Panel into position. Failure to protect the glass edges and corners may result in glass breakage, serious injury, or death.

NOTICE

Door Alignment: Verify the Interior Slider Panel is plumb before installing the Bottom Rollers. Improper alignment may affect door operation and final glass positioning.

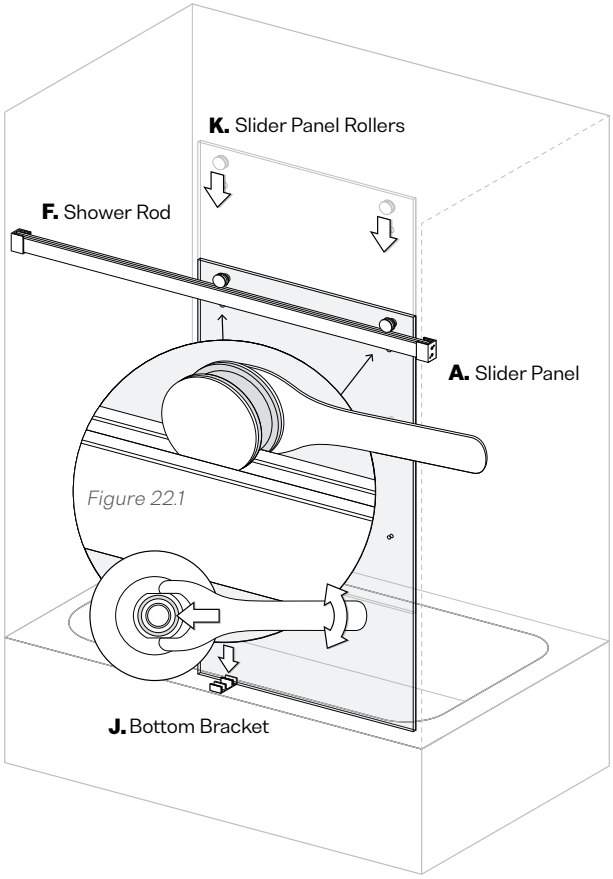

22

Hang Interior Slider Panel

a. Lift the Interior Slider Panel (**A.**) and carefully lower the top Rollers (**K.**) onto the Shower Rod (**F.**).

b. Ensure the bottom of the Interior Slider Panel engages the Bottom Bracket (**J.**) and the Bottom Sweep (**E.**) faces the interior of the shower.

c. Gently slide the Interior Slider Panel side to side and verify it moves freely without binding.

d. Verify the Interior Slider Panel is plumb and aligned evenly with the wall.

e. If adjustment is required, use the Open-End Wrench from the Tool Kit (**H.**) to adjust the top Rollers until the Interior Slider Panel is plumb and properly aligned.

NOTICE

Roller Orientation: Ensure the flat area of each Roller wheel is parallel to the top edge of the Slider Panel. Incorrect Roller orientation may affect panel alignment and operation.

Glass Handling: If lowering the Slider Panel for access, ensure the glass does not contact the tile, threshold, or any hard surface.

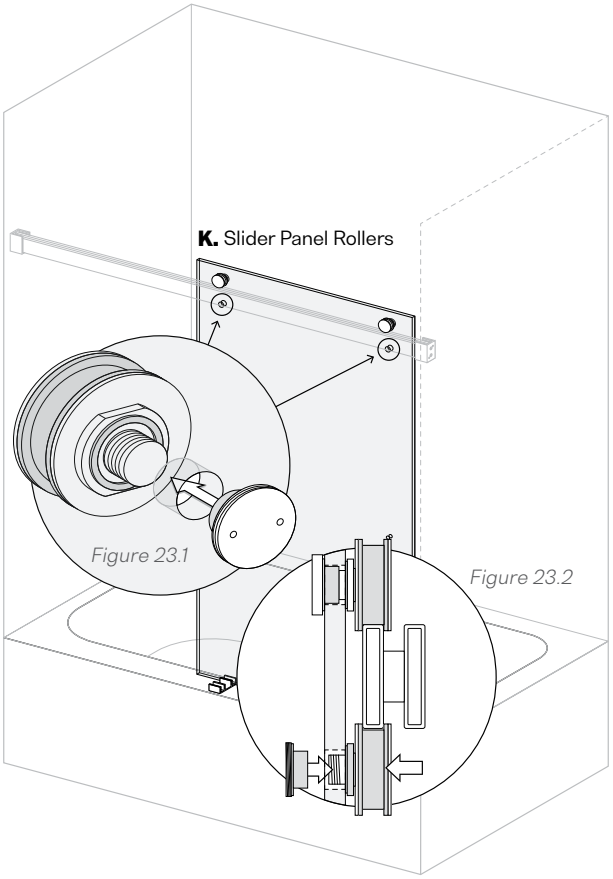

23

Install Bottom Rollers on Interior Panel

a. Remove the Interior Plate from both Bottom Rollers (**K.**).

b. Align each Bottom Roller so the flat area of the wheel is parallel to the top edge of the Slider Panel (Fig. 23.1).

c. Install the Bottom Rollers into the lower mounting holes of the Interior Slider Panel and reattach the Interior Plates (Fig. 23.2).

d. If additional access is required, loosen the upper Rollers using the Spanner Wrench (**H.**) and adjust the Slider Panel (**A.**) downward using the Open-End Wrench.

NOTICE

Roller Adjustment: Adjust the Bottom Rollers until they are snug against the Shower Rod. Improper adjustment may affect door alignment.

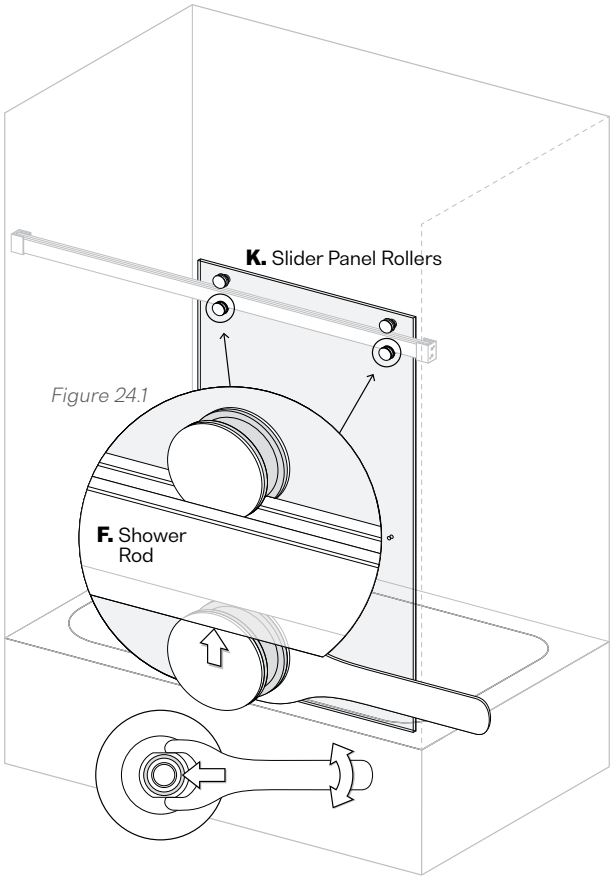

24

Adjust Bottom Rollers

a. Using the Spanner Wrench and Open-End Wrench, adjust the Bottom Rollers (**K.**) until they fit snug against the Shower Rod (**F.**) (Fig. 24.1).

b. Verify all Rollers move smoothly along the Shower Rod without excessive play.

c. Reinstall the Exterior Cover Plates on all four Rollers.

WARNING

Glass Handling: Ensure the glass does not contact the tile, threshold, or any hard surface while lowering the Slider Panel into position. Failure to protect the glass edges and corners may result in glass breakage, serious injury, or death.

NOTICE

Door Alignment: Verify the Exterior Slider Panel is plumb before installing the Bottom Rollers Improper alignment may affect door operation and final glass positioning.

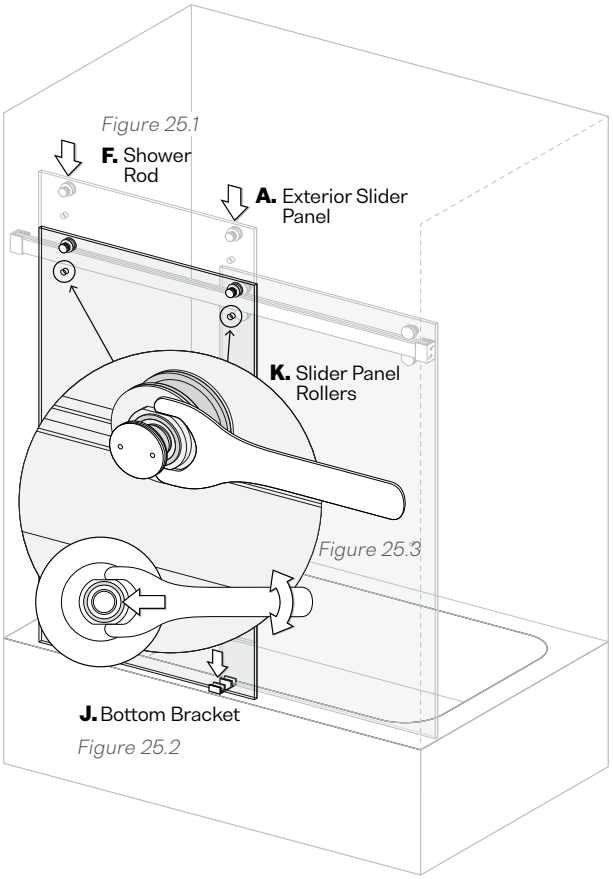

25

Hang Exterior Slider Panel

a. Lift the Exterior Slider Panel (**A.**) and carefully lower the top Rollers (**K.**) onto the Shower Rod (**F.**) (Fig. 25.1).

b. Ensure the bottom of the Exterior Slider Panel engages the Bottom Bracket (**J.**) and the Bottom Sweep (**E.**) faces the interior of the shower (Fig. 25.2).

c. Gently slide the Exterior Slider Panel side to side and verify it moves freely without binding.

d. Verify the Exterior Slider Panel is plumb and aligned evenly with the wall.

e. If adjustment is required, use the Open-End Wrench from the Tool Kit (**H.**) to adjust the top Rollers until the Exterior Slider Panel is plumb and properly aligned (Fig. 25.3).

NOTICE

Roller Orientation: Ensure the flat area of each Roller wheel is parallel to the top edge of the Slider Panel. Incorrect Roller orientation may affect panel alignment and operation.

Glass Handling: If lowering the Slider Panel for access, ensure the glass does not contact the tile, threshold, or any hard surface.

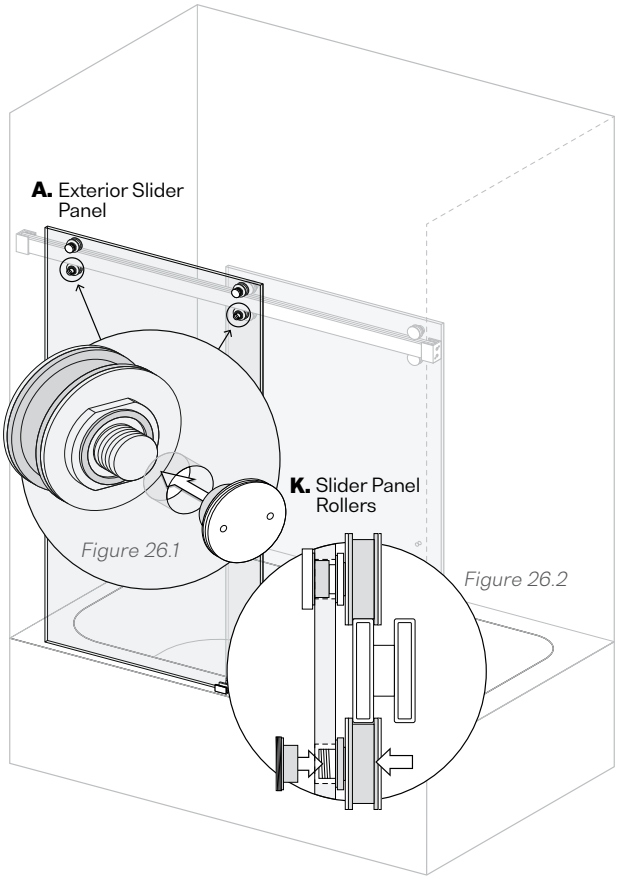

26

Install Bottom Rollers on Exterior Panel

a. Remove the Interior Plate from both Bottom Rollers (**K.**).

b. Align each Bottom Roller so the flat area of the wheel is parallel to the top edge of the Slider Panel (**A.**).

c. Install the Bottom Rollers into the lower mounting holes of the Exterior Slider Panel and reattach the Interior Plates (Fig. 26.1 and 26.2).

d. If additional access is required, loosen the upper Rollers using the Spanner Wrench and adjust the Slider Panel downward using the Open-End Wrench.

NOTICE

Slider Panel Stopper Position: The Slider Panels must stop at least **½"** from the wall. This clearance is required for proper installation of the Safety Strips and to prevent contact with the wall.

Door Testing: Slide the Slider Panels gently when testing Stopper positions to avoid damage to the glass panels.

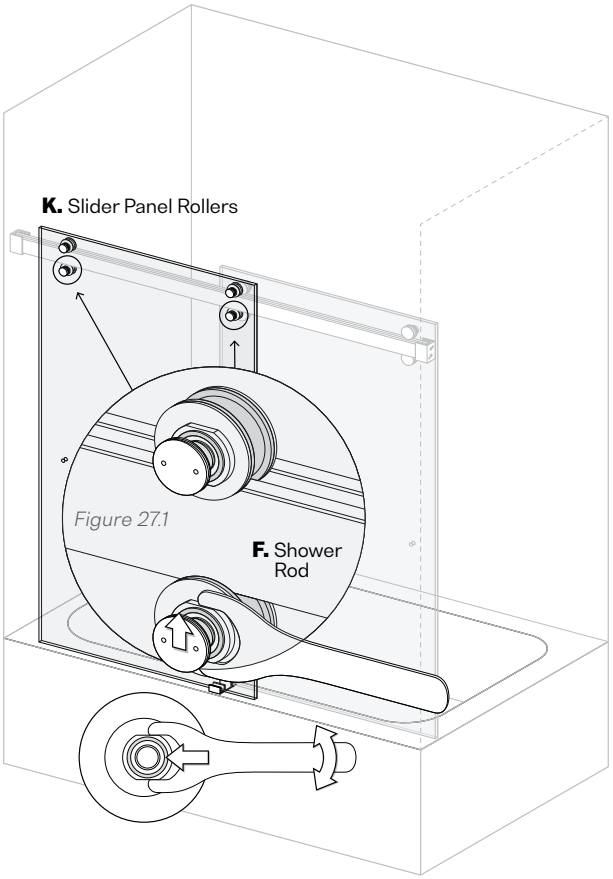

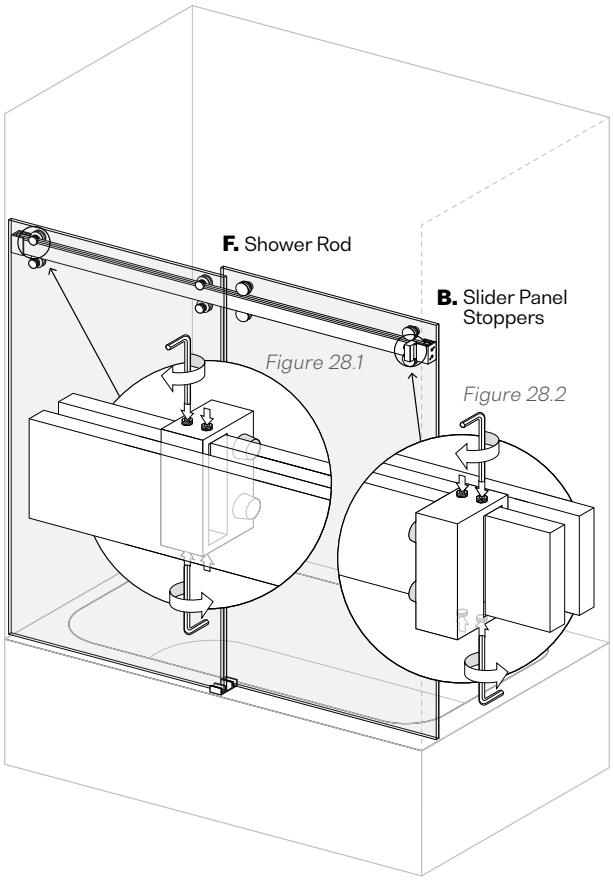

27

Adjust Bottom Rollers

a. Using the Spanner Wrench and Open-End Wrench (**H.**), adjust the Bottom Rollers (**K.**) until they fit snug against the Shower Rod (**F.**) (Fig. 27.1).

b. Verify all Rollers move smoothly along the Shower Rod without excessive play.

c. Reinstall the Exterior Cover Plates on all four Rollers.

28

Position and Secure Slider Panel Stoppers

a. Slide the Slider Panel Stoppers (**B.**) along the Shower Rod (**F.**) until both Slider Panels stop in the desired position (Fig. 28.1 and 28.2).

b. Verify each Slider Panel stops at least **½"** from the wall.

c. Gently open and close both Slider Panels to confirm proper Stopper placement.

d. Once the desired position has been confirmed, tighten the Slider Panel Stoppers securely in place (Fig. 28.1 and 28.2).

NOTICE

Handle Hardware: Keep all mounting hardware together and readily available to ensure proper Towel Bar Handle installation.

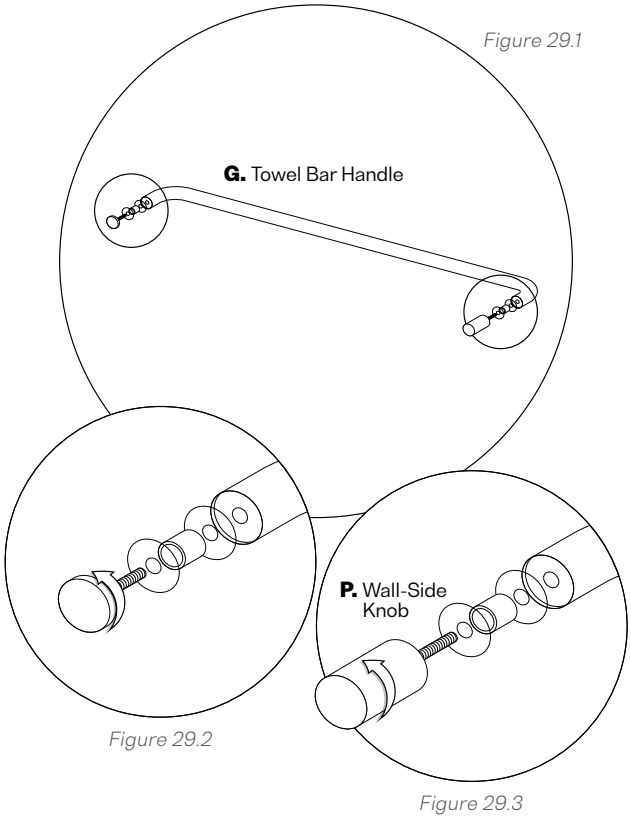

29

Prepare Towel Bar Handles for Installation

a. Unpack both Towel Bar Handles (**G.**) and verify all handle components are present (Fig. 29.1).

b. Unscrew and remove the mounting hardware from each end of the Towel Bar Handles (Fig. 29.2).

c. Identify the Wall-Side Knobs (**P.**). One Wall-Side Knob will be installed on each Towel Bar Handle at the end closest to the wall (Fig. 29.3).

d. Set all hardware components aside for use during installation.

NOTICE

Handle Orientation: Install one Wall-Side Knob on each Towel Bar Handle at the end closest to the wall. Verify handle orientation before tightening the mounting hardware completely.

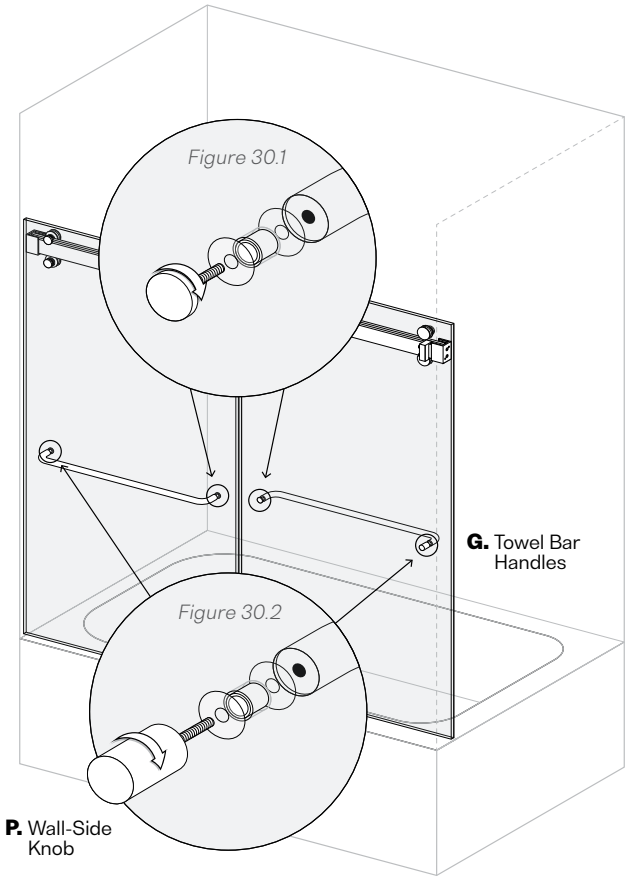

30

Install Towel Bar Handles

a. Position the Towel Bar Handle (**G.**) components on the Slider Panels as shown (Fig. 30.1 and 30.2).

b. Install one Wall-Side Knob (**P.**) on each Towel Bar Handle at the end closest to the wall (Fig. 30.1 and 30.2).

c. Install the mounting hardware through the glass and reassemble the Towel Bar Handles. Position the handle on the Interior Slider Panel so it is located on the inside of the shower and position the handle on the Exterior Slider Panel so it is located on the outside of the shower.

d. Tighten all mounting hardware completely using the supplied Allen Wrench through the hole in the mounting post.

NOTICE

Seal Length: Cut the L-Shaped Seals to match the height of the Slider Panels to ensure proper fit and coverage.

WARNING

Eye Protection: Always wear approved safety glasses or safety goggles when drilling, cutting, or trimming materials during installation. Flying debris, metal shavings, and sharp particles may cause serious eye injury

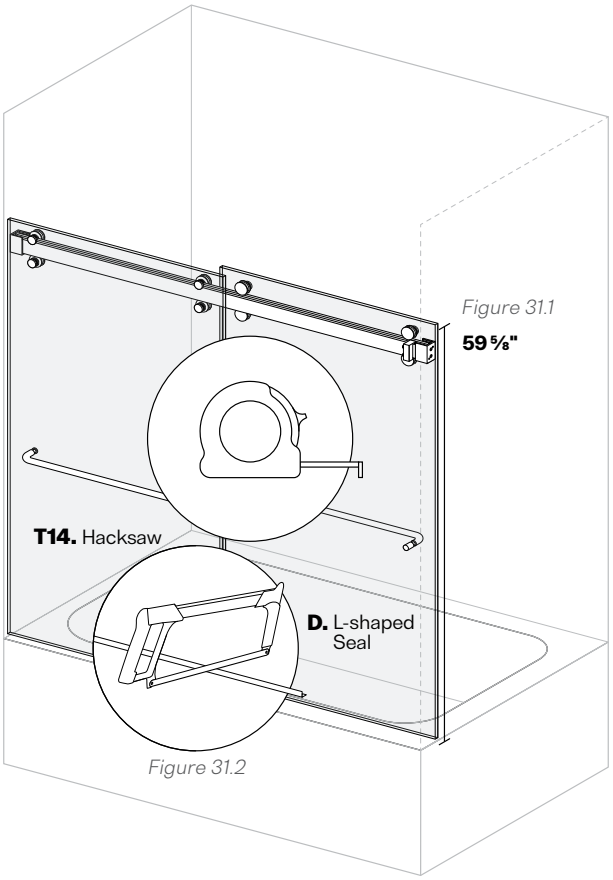

31

Trim L-Shaped Seals

a. Measure the installed height of the Slider Panels from the threshold to the top edge of the glass (Fig. 31.1).

b. Transfer this measurement to both L-Shaped Seals (**D.**).

c. Using a Hacksaw (**T14.**) or Utility Knife (**T6.**), cut both L-Shaped Seals to length (Fig. 31.2).

d. Verify both L-Shaped Seals match the measured Slider Panel height before proceeding.

NOTICE

Seal Position: Ensure the L-Shaped Seal is aligned with the top edge of the Slider Panel before securing it in place.

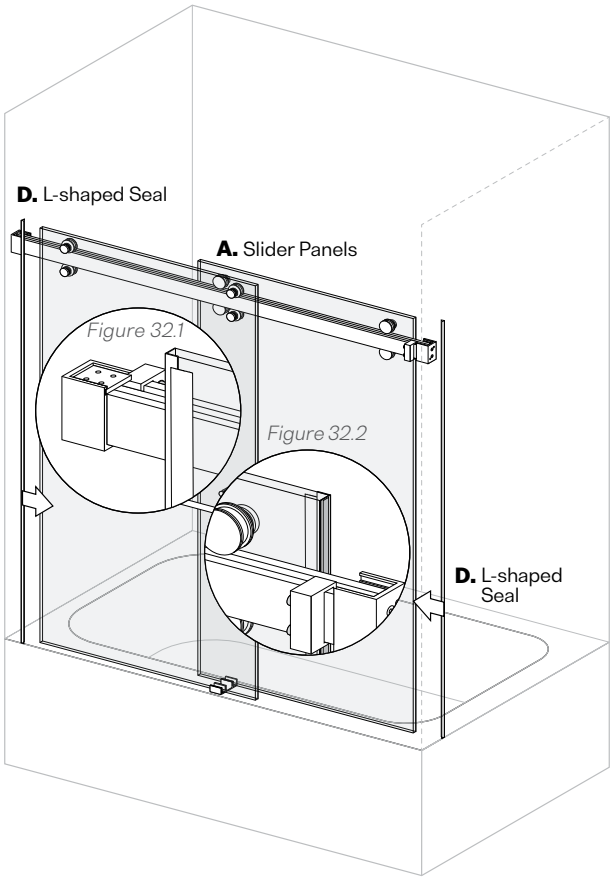

32

Attach L-Shaped Seals

a. Position an L-Shaped Seal (**D.**) on the wall side of the first Slider Panel (**A.**) (Fig. 32.1).

b. Align the top of the L-Shaped Seal with the top edge of the Slider Panel (Fig. 32.1).

c. Temporarily secure the L-Shaped Seal in place using Painter's Tape (Fig. 32.1).

d. Repeat this process on the second Slider Panel (Fig. 32.2).

WARNING

L-Shaped Seals Required: L-Shaped Seals must be installed on this enclosure to prevent the Slider Panels from contacting the wall or other hard surfaces. Failure to install the L-Shaped Seals will void the warranty and may result in glass breakage, serious injury, or death.

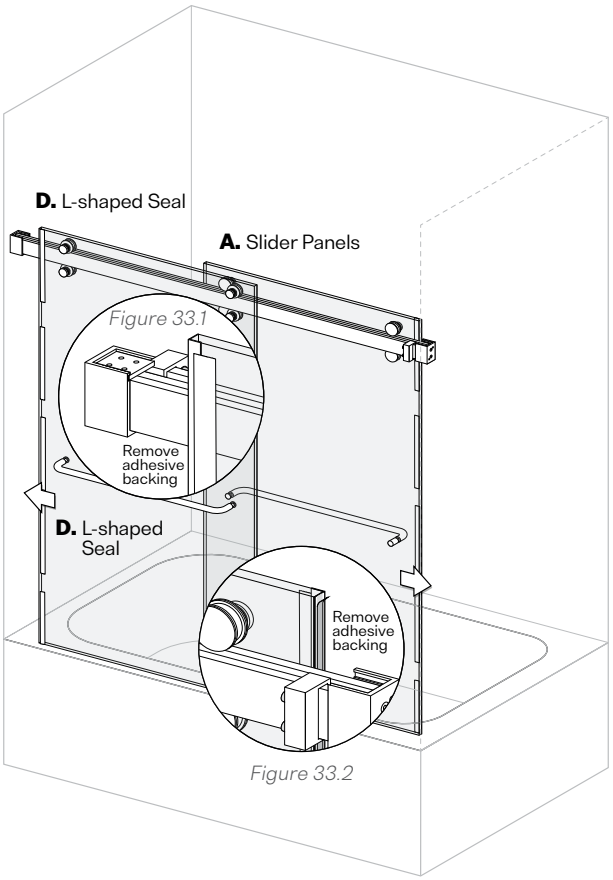

33

Install L-Shaped Seals

a. Remove the protective liner from the first L-Shaped Seal (**D.**).

b. Close the Slider Panel so the L-Shaped Seal adheres to the wall (Fig. 33.1).

c. Remove the Painter's Tape from the Slider Panel (**A.**) and L-Shaped Seal (Fig. 33.1).

d. Open the Slider Panel and press the L-Shaped Seal firmly into place along the full height of the wall (Fig. 33.1).

e. Repeat this process for the second Slider Panel (Fig. 33.2).

WARNING

Bulb Seals Required: Bulb Seals must be installed on this enclosure to prevent the Slider Panels from contacting the wall or other hard surfaces. Failure to install the Bulb Seals will void the warranty and may result in glass breakage, serious injury, or death.

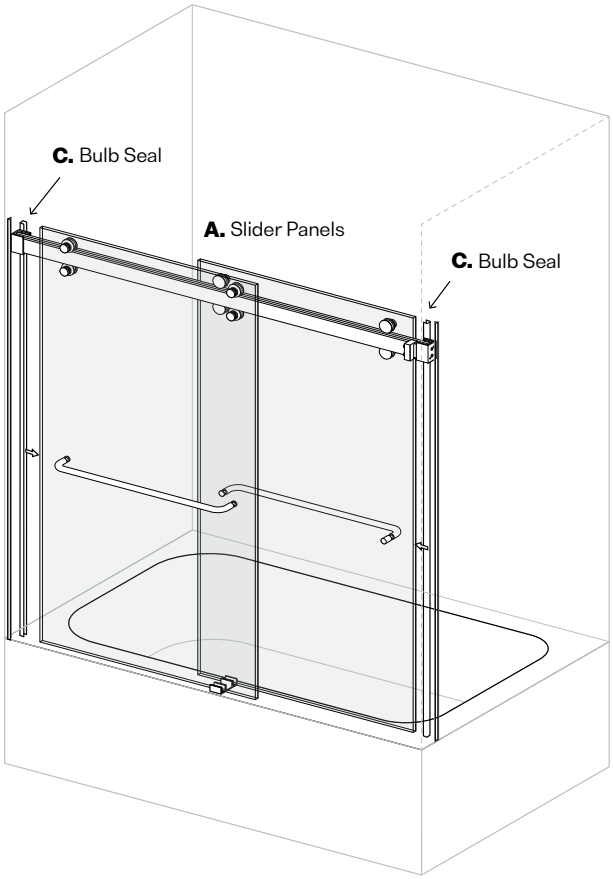

34

Install Bulb Seals on Slider Panels

a. Attach a Bulb Seal (**C.**) to the wall-side edge of each Slider Panel (**A.**). The Bulb Seal should be installed on the edge closest to the wall.

b. Press each Bulb Seal firmly into place along the full height of the glass.

c. Verify both Bulb Seals are fully seated and securely attached.

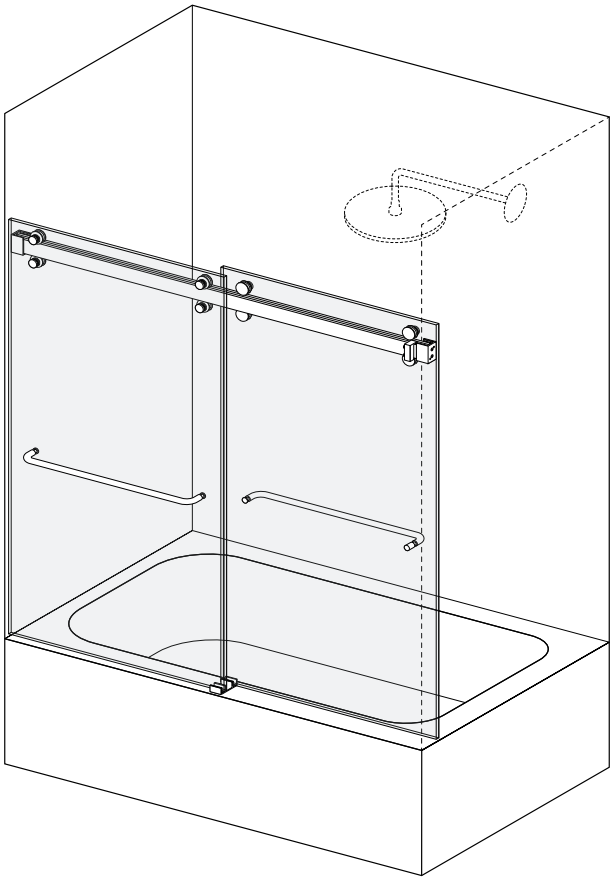

35

Installation Complete!

a. Verify all components are securely installed and operating properly.

b. Ensure all silicone has fully cured before using the shower.

c. Register your warranty using the instructions provided on the back cover of this Installation Guide.

Thank You
for Your Purchase.

If, for any reason, you are having trouble with installation, or if the size of the product does not fit your designated space, please contact Glass Warehouse directly before returning it to the place of purchase, as we may be able to replace a panel or parts to better suit your space.

Glass Warehouse takes pride in providing quality products and customer service. We want to ensure your satisfaction with your purchase for years to come. With our extensive range of sizes, no matter what your measurements are, Glass Warehouse should be able to assist you!

If you have any questions, please do not hesitate to reach out to us. Thank you again for choosing Glass Warehouse!

Best Regards,

The Team at Glass Warehouse
Glass Warehouse, LLC
(760) 536 3640
inquiries@glasswarehouse.us

Hardware Care & Maintenance

Care & Maintenance

Your Glass Warehouse shower enclosure is designed for long-lasting performance and beauty. Regular cleaning and maintenance will help prevent buildup, protect finishes, and maintain smooth operation.

Metal Hardware

To maintain the luster and function of your hardware:

- Wipe all metal components dry after each use with a soft, non-abrasive cloth.
- Do not use cleaners containing ammonia, bleach, or acid. If accidentally used, rinse immediately and dry thoroughly to prevent peeling or corrosion.
- Clean stainless steel hardware weekly. When polishing, always wipe in the direction of the grain.
- Never use steel wool, wire brushes, or abrasive pads, as these can scratch or permanently damage the surface.
- If you notice noise, stiffness, or uneven movement, stop using the door immediately and check for debris, misalignment, or damage.
- Replace any worn or damaged hardware before resuming use.

Have Questions? Need Some Help?

Contact Us!

Email: inquiries @ GlassWarehouse.us
Phone: (760) 536-3640

Roller Assemblies (if applicable)

The roller system supports and guides your sliding door panel and must remain in good condition for safe operation.

- Inspect rollers monthly to confirm smooth, quiet movement and ensure all bolts and set screws are tight.
- Verify that the rollers remain properly aligned and seated on the guide rail.
- If you notice noise, stiffness, or uneven movement, stop using the door immediately and check for debris, misalignment, or damage.
- Replace any worn or damaged rollers before resuming use.
- Failure to maintain or replace damaged rollers can lead to glass instability and result in death or serious injury.
- Inspect roller guides regularly to confirm they are securely fastened and free of damage. If guide becomes loose, misaligned, or damaged, discontinue use of the door until the issue is corrected.
- Verify that the guides maintain the correct clearance between the door panel and the shower rod, as specified during installation.
- Ensure the door panel remains centered within the guides and does not contact surrounding hardware during operation.
- Failure to properly maintain roller guides can result in door instability and may lead to serious injury or death.

Glass Care & Maintenance

EnduroShield makes cleaning easier and less frequent; however it is recommended that you continue to clean the surfaces regularly.

Maintaining the Treated Surface

For best results simply drying the glass with a squeegee or towel after each use will help keep the glass clean and reduce mineral spots forming. The glass needs to be cleaned every few weeks using a damp microfiber cloth and a mild detergent to break down soaps, oils, and conditioners on the glass. General glass cleaners are also suitable, however most of these are finishing agents rather than cleaners, and are an added expense that is not required.

Hard Water Maintenance

In hard water areas, or areas where water drops dry and leave a noticeable dust mark, a buildup of minerals may occur on the protective treatment. While these may not be removed as easily with the mild detergent, mild acids will often remove the marks quickly. As needed white vinegar should be used to wipe down the glass. Keep in mind the vinegar may be diluted with water, however dilution reduces the effectiveness.

Spray vinegar onto the glass and allow to soak for several minutes. This should dissolve any mineral deposits that have built up on the glass surface. A damp microfiber cloth should then be used to wipe over the surface. For extreme hard water areas we recommend using undiluted vinegar every week or so as a cleaning option to reduce this build up on the surface, rather than allowing the build up to continue over a long period of time.

Caution: Prohibited Products *Note these may damage the treatment and void any warranty

- Avoid the use of any abrasives or polishes including water spot removers, toothpaste, polishes, rough, or gritty substances
- Avoid the use of acids or alkalis that you would not want in contact with your skin for an extended period of time
- Avoid products such as Comet, Ajax, Jiff or Cerium Oxide which polish back the actual substrate
- Avoid the use of any harsh or chemical cleaners, with correct maintenance these are never required

Approved Cleaning Products

The below products have been tested for compatibility with EnduroShield, however there are no specific products that must be used. We feel you should not be required to purchase extra products in order to keep your glass clean. With correct maintenance, all you need for clean glass beyond 10 years is a squeegee, a mild liquid dish soap, and white vinegar.

Any product that does not fall into the prohibited categories listed above will be fine, and below is a short list of acceptable products:

- Windex
- SprayWay (or other alcohol based foaming cleaners)
- Scrubbing Bubbles (or other automatic leave-to-dry daily shower cleaners)
- 7th Generation, Dawn (or other mild eco friendly cleaners)
- CLR (Calcium Lime Rust)
- Mr. Clean Magic Eraser (when damp)

It should be noted that with any cleaner used on the EnduroShield surface a thorough rinse with clean water should follow immediately. Although these cleaners can be used, EnduroShield is designed to be an 'easy clean coating' that does not require harsh or toxic cleaning chemicals to maintain the surface effectively.

If for any reason the recommended maintenance has not been followed for some time, just as it took time for the build up to occur, it will take time to remove the debris from the protected glass surface. This can most commonly be achieved using undiluted white vinegar dampened on a Magic Eraser, or CLR on a Magic Eraser. Depending on the severity of the build up this may take multiple attempts, but once the glass is clean again it will perform like new. Should you have any queries regarding the cleaning of your treated surfaces please contact EnduroShield.

tel: 805 617 4609
email: salesusa@enduroshield.com
www.enduroshield.com

More Than Just a Warehouse

First, We Brought the World High-Quality Affordable Glass Shower Doors & Enclosures.

Now, Our Expanding Line of Products Includes Glass Railing Solutions, Mirrors, Medicine Cabinets and More.

GLASSWAREHOUSE

GLASSWAREHOUSE.US

© 2026 Glass Warehouse, All Rights Reserved

Exclusive Limited Warranty Terms & Conditions.

This Limited Lifetime Warranty ("Warranty") is effective as of APRIL 6, 2026

PLEASE READ THE WARRANTY TERMS AND CONDITIONS BEFORE PURCHASING AND BEFORE INSTALLING OR RESELLING YOUR GLASS WAREHOUSE PRODUCT. BY PURCHASE, INSTALLING, AND OR RESELLING THE GLASS WAREHOUSE PRODUCT, YOU ARE CONSENTING TO BE BOUND BY THE FOLLOWING TERMS AND CONDITIONS.

Glass Warehouse, LLC ("Seller") provides this Warranty to the business or individual ("Buyer") who purchases a Glass Warehouse product ("Product") directly from Seller or from an authorized reseller, including without limitation, shower kits, railing hardware, medicine cabinets, and mirrors. If Buyer is a licensed and fully insured professional and Buyer installs the Product in the residence of one of Buyer's customers ("Customer"), Buyer may pass this Warranty through to such Customer. In each case, this Warranty shall extend only to the original Buyer or Customer at the time of installation and shall expire if the original Buyer or Customer no longer owns or occupies the residence at which the Product is first installed. This Warranty will not apply to any subsequent owners or occupants of the residence. "Products" do not include, and this Warranty specifically excludes: (i) any products sold by Glass Warehouse under brand names other than Glass Warehouse; (ii) any third-party products distributed or sold by Glass Warehouse that are not incorporated into a Glass Warehouse Product.

Limited Lifetime Warranty for Glass

With respect to any glass components of the Product, Seller warrants to Buyer that for the lifetime of the Product ("Glass Warranty Period"), that such components (excluding seals) will materially conform to Seller's published specifications and will be free from material defects in material and workmanship. Warranty for any part in oil rubbed bronze or matte black finish shall be limited to one (1) year. With respect to any Product used in commercial, industrial, or non-residential uses, including without limitation hotels, casinos, and apartments, the Glass Warranty Period is one (1) year. For mirrors, including medicine cabinets with mirrors, the Glass Warranty Period is one (1) year. For glass railings, the Glass Warranty Period is three (3) years. The Glass Warranty Period with respect to the outer coating of any glass component, such as an Enduroshield coating, is five (5) years.

Limited 5-Year Warranty for Hardware

With respect to any hardware components of the Product, Seller warrants to Buyer that for a period of five (5) years from the date of Buyer's purchase of the Product ("Hardware Warranty Period"), that such components (excluding seals) will materially conform to Seller's published specifications and will be free from material defects in material and workmanship. With respect to any Product used in commercial, industrial, or non-residential uses, including without limitation hotels, casinos, and apartments, the Hardware Warranty Period is one (1) year. For mirrors, including medicine cabinets with mirrors, the Hardware Warranty Period is one (1) year. For railings, the Hardware Warranty Period is one (1) year. The Glass Warranty Period and Hardware Warranty Period are referred to together as the "Warranty Period."

While stainless steel is resistant to corrosion, it is not corrosion or rust-proof. Environmental conditions including, but not limited to, exposure to chemicals, salt air, pollution, and high humidity may cause surface discoloration or rust. Regular cleaning and maintenance is required to maintain the appearance and integrity of stainless steel products. Seller makes no warranty against and shall not be liable for any claims related to surface rust, discoloration, or corrosion of stainless steel components.

Warranty Terms and Conditions

This Warranty shall be voided if the Product (i) has been subjected to abuse, misuse, neglect, negligence, accident, improper testing, improper installation, improper cleaning (such as use of abrasive cleaners), improper storage, improper handling, abnormal physical stress, abnormal environmental conditions, or use or installation contrary to any instructions or guidelines issued by Seller; (ii) has been altered, repaired, or reconstructed by anyone other than Seller; (iii) was installed by anyone other than a fully insured and licensed professional; (iv) was not installed according to Glass Warehouse's published installation instructions or guidelines; (v) is installed or used outside of the US or Canada; or (vi) has been used with any third-party hardware or product that has not been previously approved in writing by Seller. This Warranty shall not apply to normal wear and tear. With respect to Products advertised by Glass Warehouse for outdoor use, this Warranty specifically excludes damage caused by extreme weather events.

WARNING: INSTALLATION OF GLASS PRODUCTS (I.E., SHOWER AND TUB DOORS) BY AN UNLICENSED OR INEXPERIENCED INSTALLER MAY RESULT IN GLASS BREAKAGE, DAMAGE TO PROPERTY, SERIOUS INJURY OR DEATH.

Neither Buyer, nor any other person is permitted to make any affirmation, representation, or warranty other than those contained in this Warranty. Any affirmation, representation, or warranty other than those contained in this Warranty shall not be enforceable against Seller or any other person. Seller reserves the right to modify this Warranty at any time, it being understood that such modifications will not alter the terms and conditions applicable at the time of sale of the products in question.

Please register your information to activate your warranty. **https://qr.glasswarehouse.us/GW-warranty**

Claims Process and Remedies:

All Warranty claims are subject to review and confirmation by Seller, and Seller reserves the right to inspect the installation to confirm the validity of the Warranty claim. To submit a Warranty claim, Buyer must:

1. Contact Seller's customer service department within 30 days of discovering the defect. Contact information:

   Phone: **+1 (760) 536-3640**
   Email: **inquiries@glasswarehouse.us**
   https://qr.glasswarehouse.us/GW-warranty

2. Provide the following required documentation: (a) proof of purchase; (b) detailed description of the defect, including photographs; (c) item part number.

3. A customer service representative will review the claim and may request additional information or schedule an inspection of the Product and/or installation. Buyer must cooperate fully with any requests for information or inspection.

Seller shall have no obligation to honor any Warranty claim that does not comply with the above claims process. If a Warranty claim is approved, Seller shall, in its sole discretion, either: (i) repair or replace such Product (or the defective part), in which case Seller shall cover shipping of the repair parts or replacement product; or (ii) refund the price paid by Buyer to Seller for such Product. Replacement parts and products will be covered by this Warranty for the remainder of the Warranty Period of the original Product. Seller may require that the Product be returned to Seller, at Seller's expense. Except for any repairs made by Seller or its representatives as set forth above, Seller shall not pay for labor related to the Warranty claim, such as removal of the defective Product or installation of a replacement product. Seller's warranty obligation shall be discharged upon tender of parts, replacement or repair of the Product. Buyer's refusal to accept the tender terminates all warranty obligations and **VOIDS THIS WARRANTY.**

THE REMEDIES SET FORTH ABOVE SHALL BE BUYER'S SOLE AND EXCLUSIVE REMEDY AND SELLER'S ENTIRE LIABILITY FOR ANY BREACH OF THIS WARRANTY.

Disclaimer and Limitation of Liability:

EXCEPT FOR THE PRECEDING WARRANTY, SELLER MAKES NO WARRANTY TO BUYER WHATSOEVER WITH RESPECT TO THE PRODUCTS AND HEREBY DISCLAIMS ALL OTHER WARRANTIES, INCLUDING ANY (I) WARRANTY OF MERCHANTABILITY; (II) WARRANTY OF FITNESS FOR A PARTICULAR PURPOSE; OR (III) WARRANTY AGAINST INFRINGEMENT OF INTELLECTUAL PROPERTY RIGHTS OF A THIRD PARTY; WHETHER EXPRESS OR IMPLIED BY LAW, COURSE OF DEALING, COURSE OF PERFORMANCE, USAGE OF TRADE OR OTHERWISE.

SELLER DISCLAIMS AND SHALL NOT BE LIABLE FOR ANY PERSONAL INJURIES OR DEATH TO ANY PERSON, INCIDENTAL DAMAGES, CONSEQUENTIAL DAMAGES, LOSS OF PROFITS, LOSS OF USE, LABOR OR MATERIAL CHARGES, OR ANY OTHER COSTS RELATING TO THE USE OR INABILITY TO USE THE PRODUCT OR REPLACEMENT PRODUCT OR RELATING TO THE APPLICATION OF THIS WARRANTY. IN NO EVENT SHALL SELLER'S AGGREGATE LIABILITY EXCEED THE PURCHASE PRICE OF THE PRODUCT.

SOME STATES LIMIT A MANUFACTURER'S ABILITY TO DISCLAIM CERTAIN WARRANTIES OR LIABILITIES AND THEREFORE SOME OF THE ABOVE DISCLAIMERS OR LIMITATIONS OF LIABILITY MAY NOT APPLY TO YOU.

Warranty Service

To activate your limited lifetime warranty, please visit:
https://qr.glasswarehouse.us/GW-warranty

Please register your information within 30 days of purchase to complete the activation of your warranty.

Contact Technical Support:

Monday – Friday 8am – 5pm PST
Technical Support: +1 (760) 536-3640