Assembly Instructions

HOU888



We come with the necessary tools for assembly
but for faster assembly, a power drill is recommended.

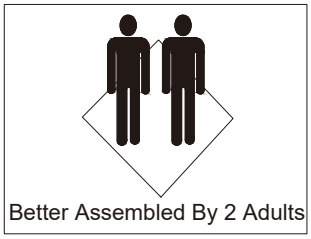

Parts List

ITEM	PART	QTY	ITEM	PART	QTY
①	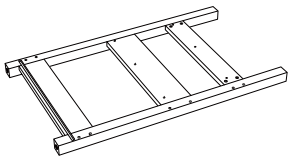	1PCS	⑫	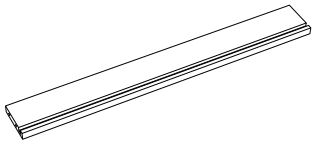	2PCS
②	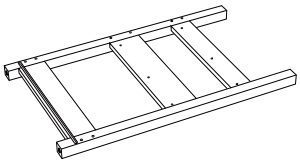	1PCS	⑬	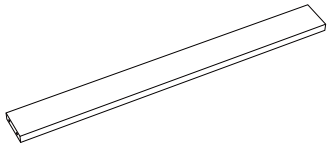	1PCS
③	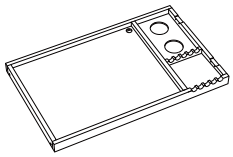	1PCS	⑭	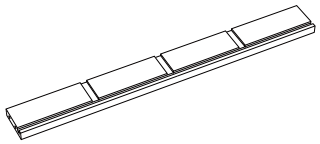	1PCS
④	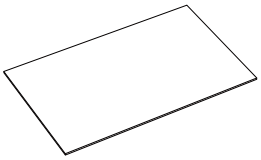	1PCS	⑮	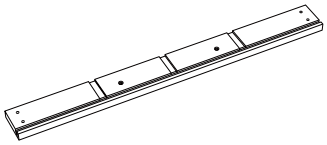	1PCS
⑤	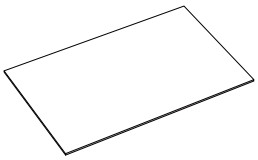	2PCS	⑯	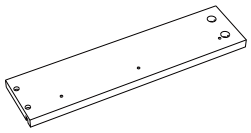	1PCS
⑥	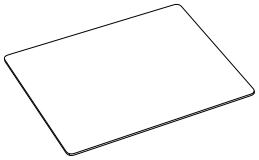	1PCS	⑰	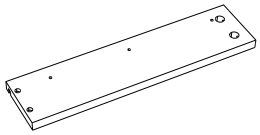	1PCS
⑦	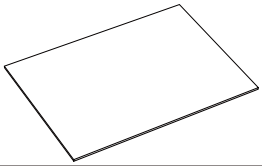	1PCS	⑱	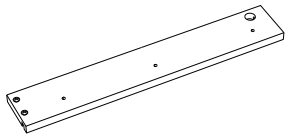	1PCS
⑧	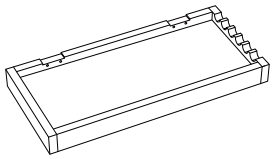	1PCS	⑲	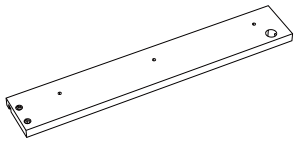	1PCS
⑨	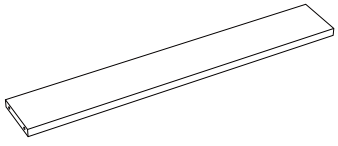	1PCS	⑳	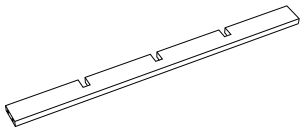	1PCS
⑩	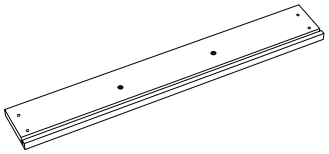	1PCS	㉑	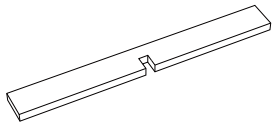	3PCS
⑪	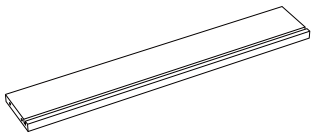	1PCS	㉒	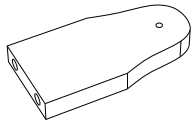	2PCS

Parts List

ITEM	PART	QTY
㉓	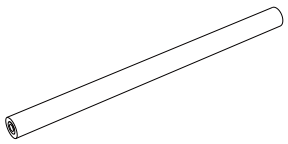	1PC
㉔		2PC

ITEM		QTY
㉕	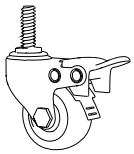	2PC
㉖		2PC

Hareware List

ITEM	PART	QTY
A	 Ø3x12mm	32+2 PCS
B	 Ø4x16mm	4+1 PCS
C	 Ø3.5x25mm	12+1 PCS
D	 Ø3.5x30mm	4+1 PCS
E	 Ø6x30mm	6+1 PCS
F	 Ø6x50mm	16+1 PCS
G		6+1 PCS

ITEM	PART	QTY
H	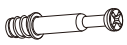	6+1 PCS
I		2 PCS
J	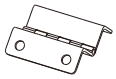	2 PCS
K		2 PCS
L	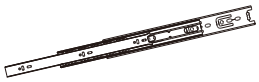	4 PCS
M		1 PCS

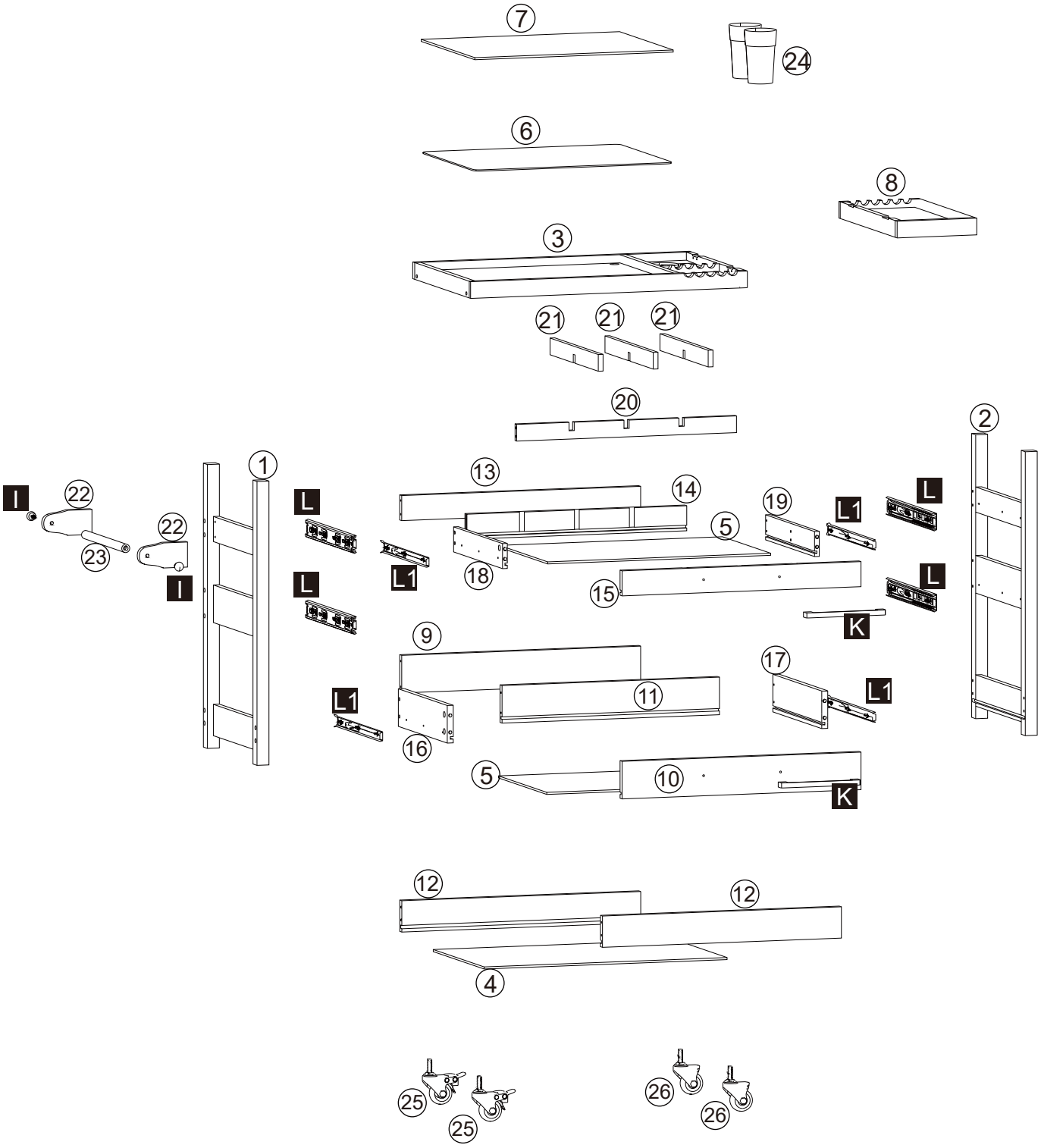
7
24
6
8
3
21
21
21
20
2
1
13
14
19
L1
L
I
22
22
23
I
L
L1
18
5
15
L
L
K
9
17
L1
11
L1
16
5
10
K
12
12
4
25
25
26
26

01

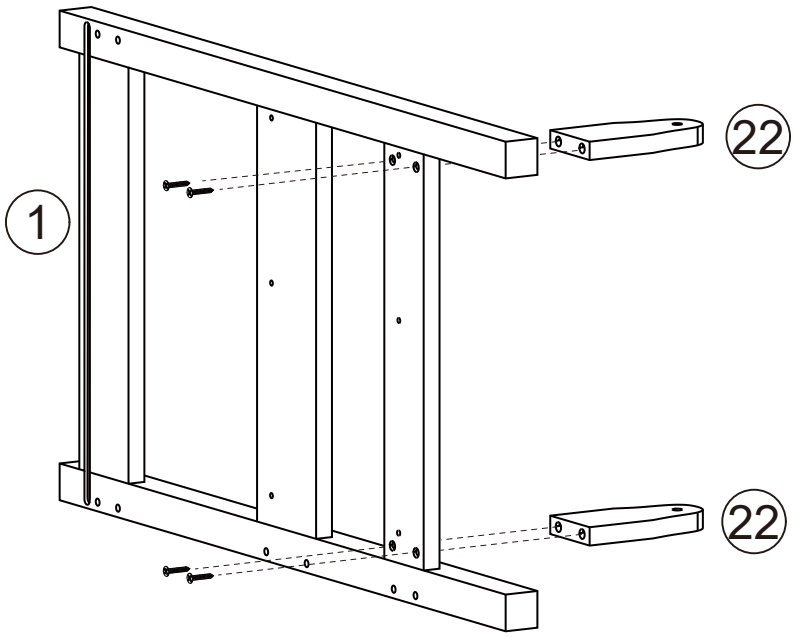

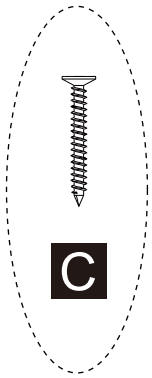

Attach Part #22 x2 to Side Frame #1 using Screws C x4, as shown.


Ø3.5x25mm Cx4

02

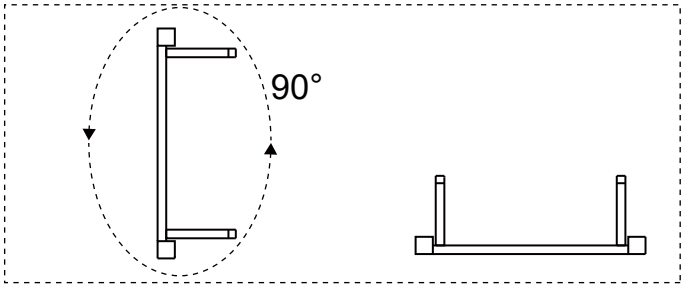

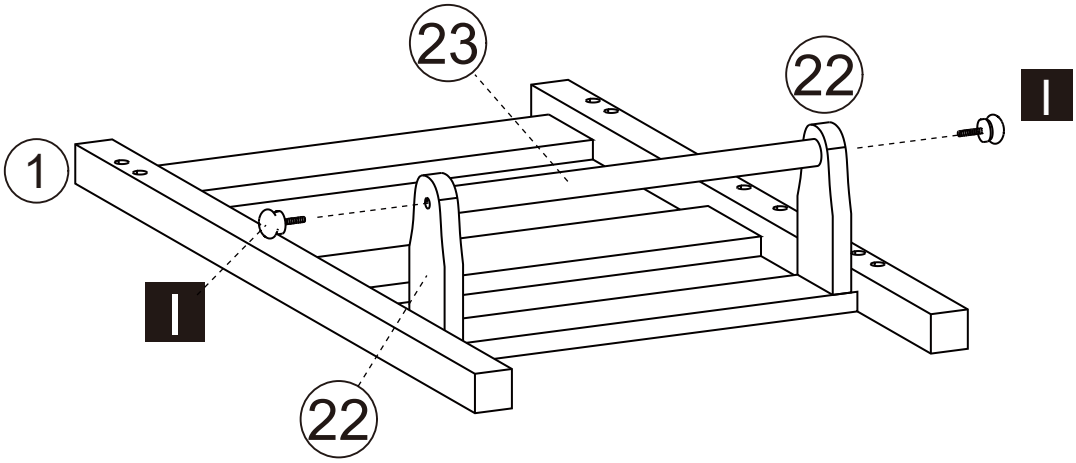

Insert Part #23 between the two Part #22 supports and secure it with Hardware I x2.


I x2

03

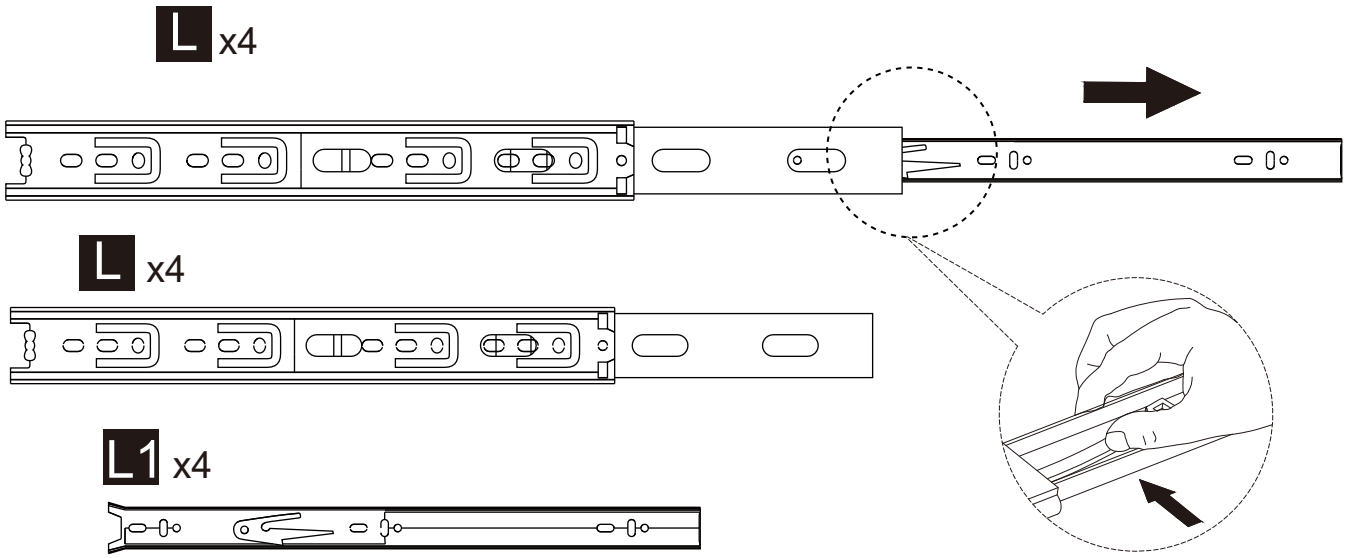

Press the release tab on Slide Rail L and pull out Inner Rail L1 from the outer rail. Repeat for all four slide rail sets before installation.


L x4

04

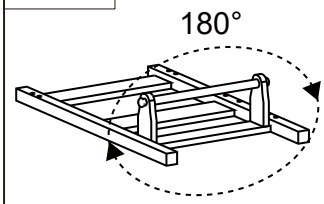

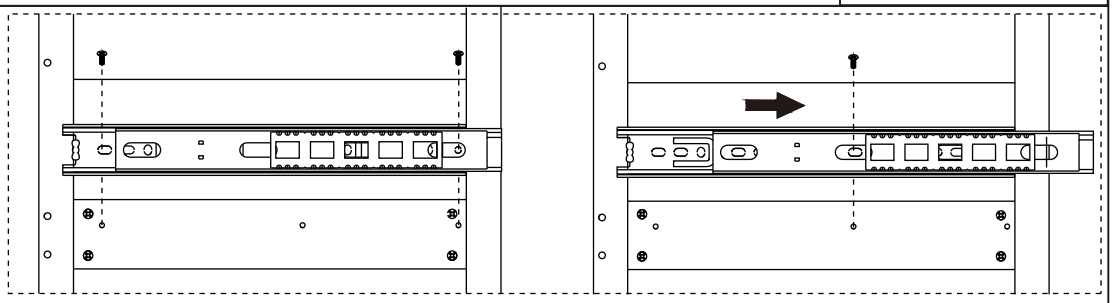

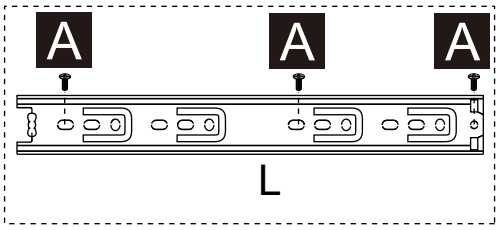

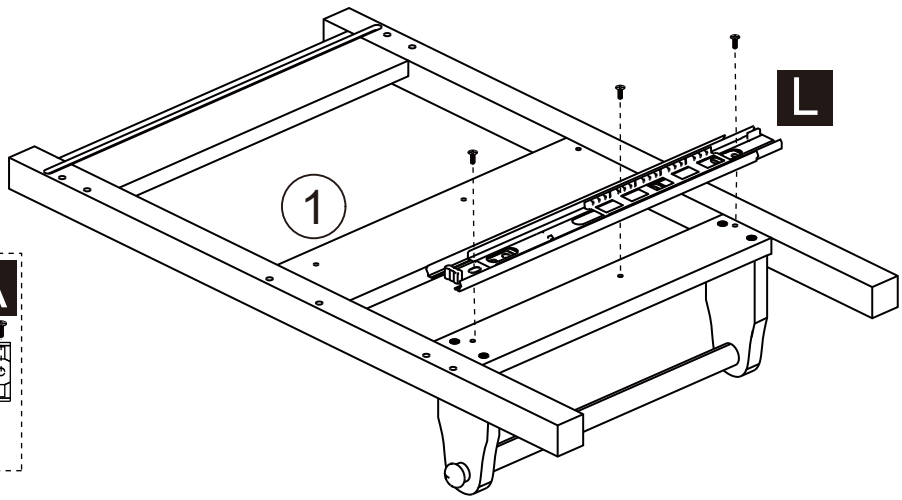

Fasten one pair of Outer Rails L to Side Frame #1 with Screws A x3, as shown. Make sure the rail direction matches the diagram and the front ends stay even.


Ø3x12mm Ax3

05

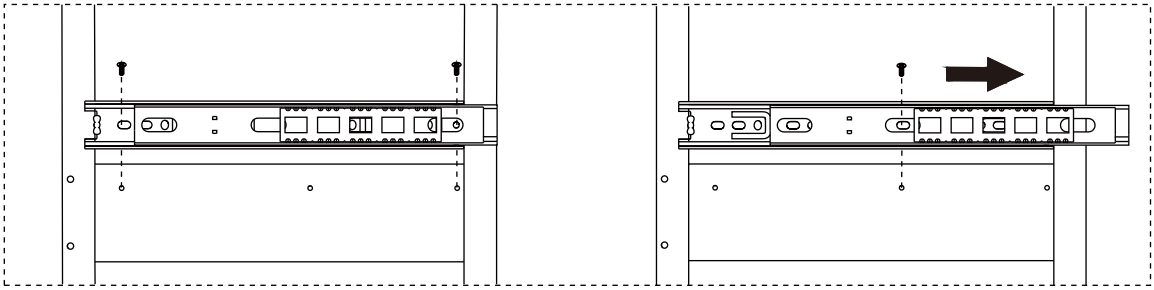

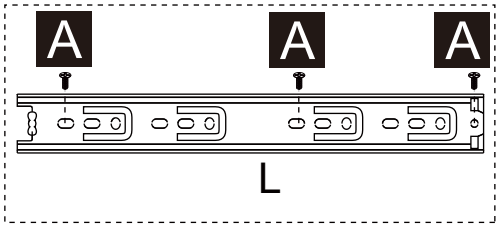

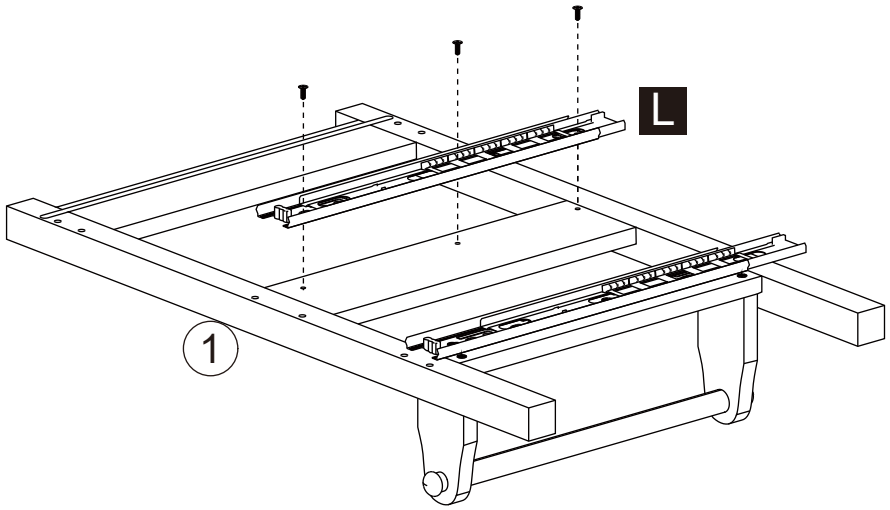

Install the second pair of Outer Rails L on Side Frame #1 with Screws A x3. Keep both rails parallel and level to ensure smooth sliding later.



Ax3

06

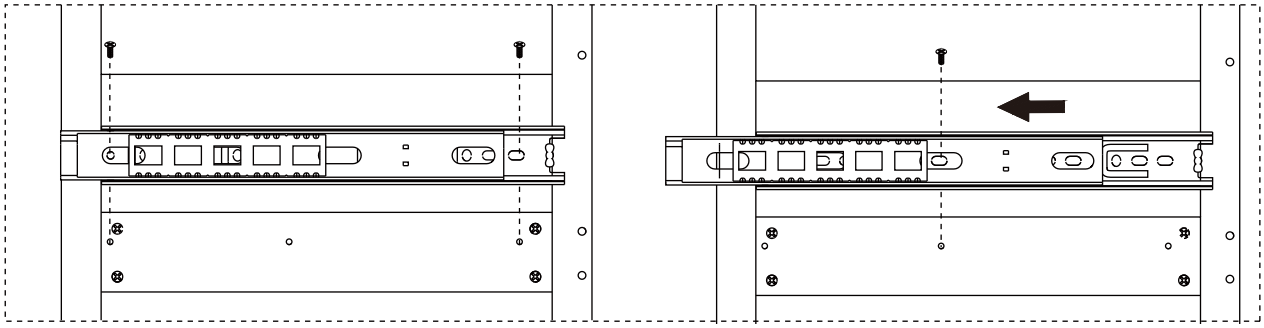

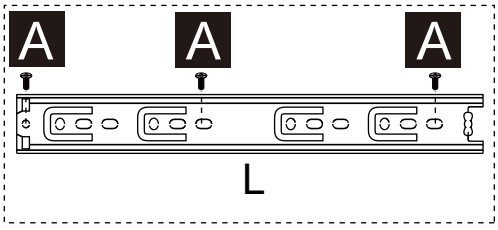

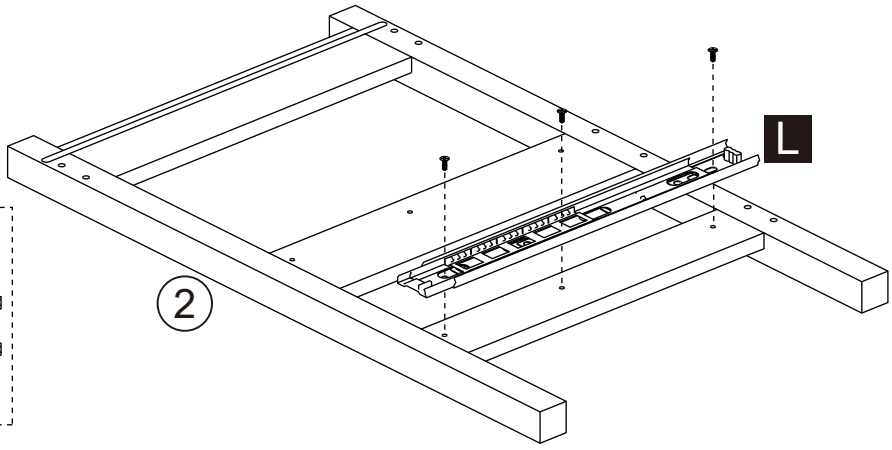

Attach one pair of Outer Rails L to Side Frame #2 with Screws A x3. Confirm that the rail orientation mirrors the opposite side correctly.



Ax3

07

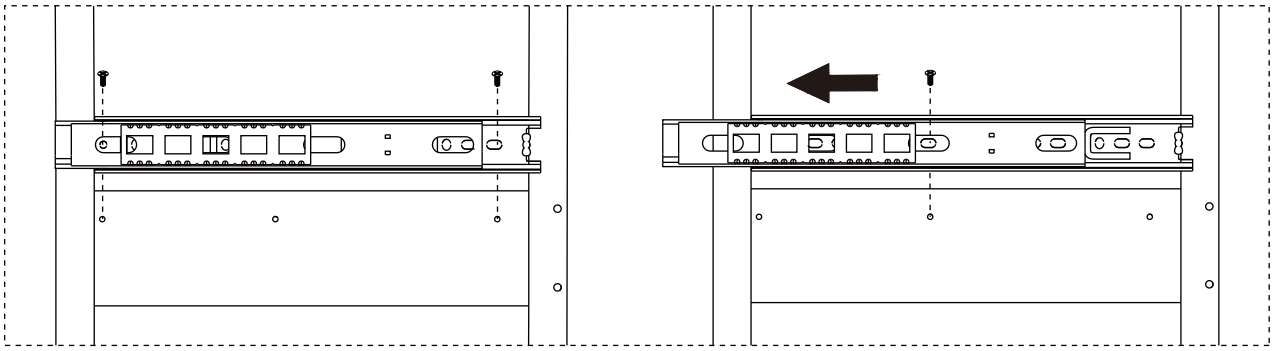

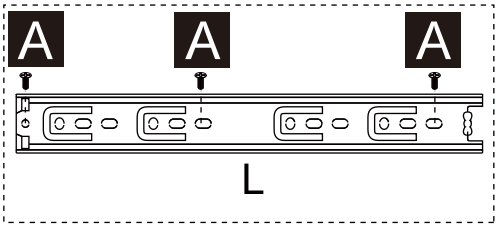

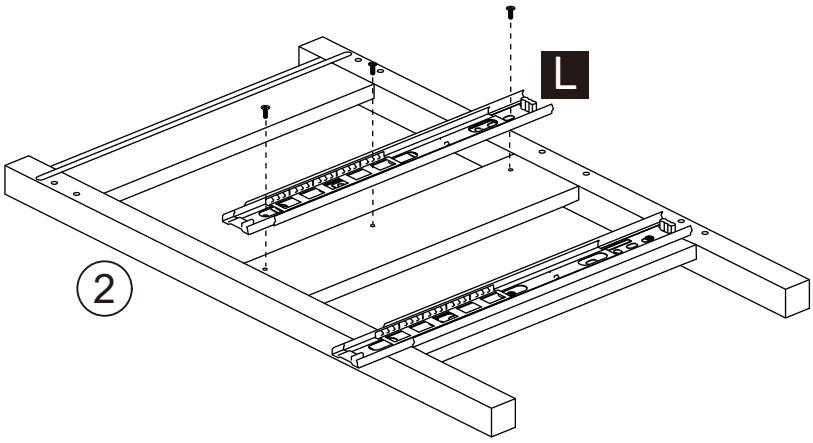

Install the second pair of Outer Rails L on Side Frame #2 with Screws A x3. Before moving on, confirm that all four outer rails are straight and at matching heights.



Ax3

08

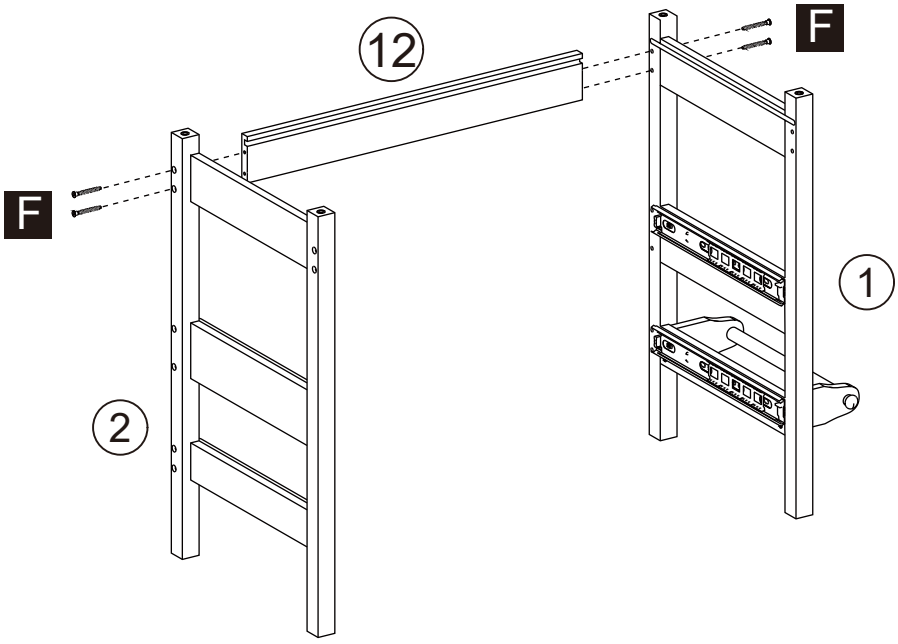

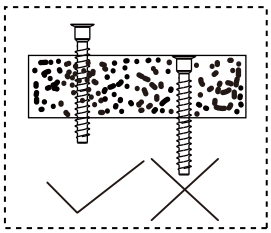

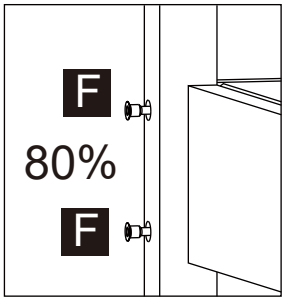

Connect Side Frames #1 and #2 with Part #12 using Bolts F x4. Tighten these bolts to about 80% first so the frame can still be adjusted during the next steps.

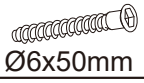

F x4

09

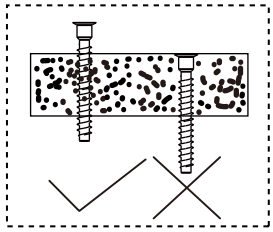

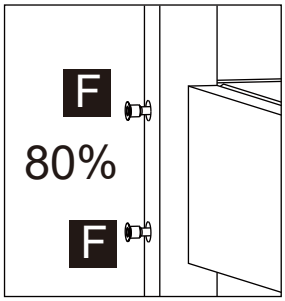

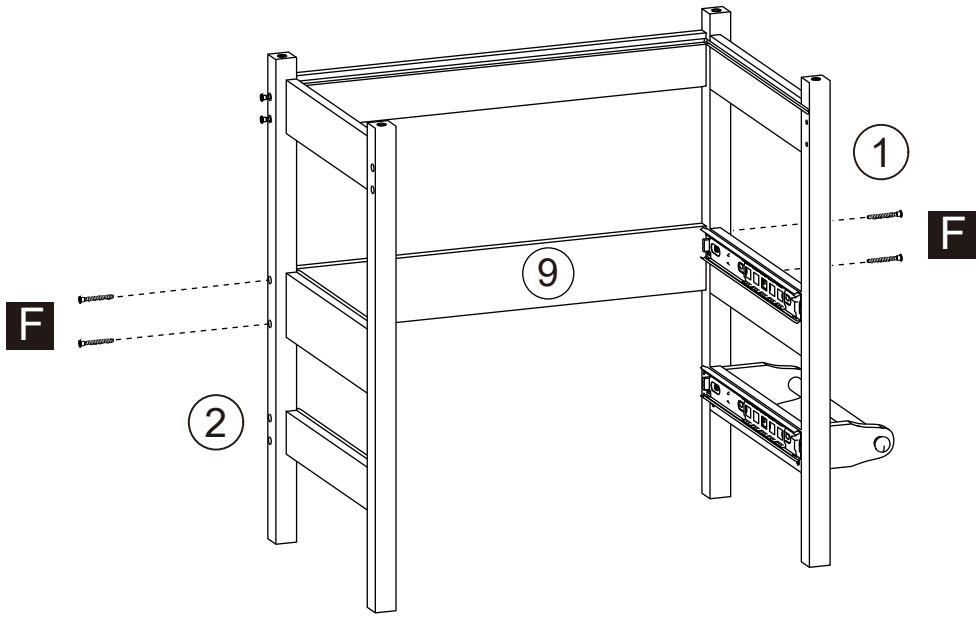

Install Part #9 between the side frames and secure it with Bolts F x4, as shown.

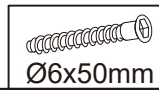

F x4

10

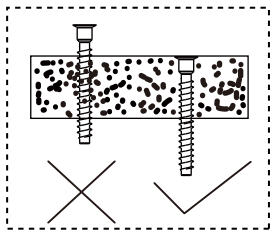

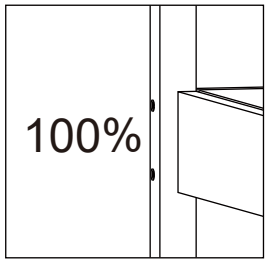

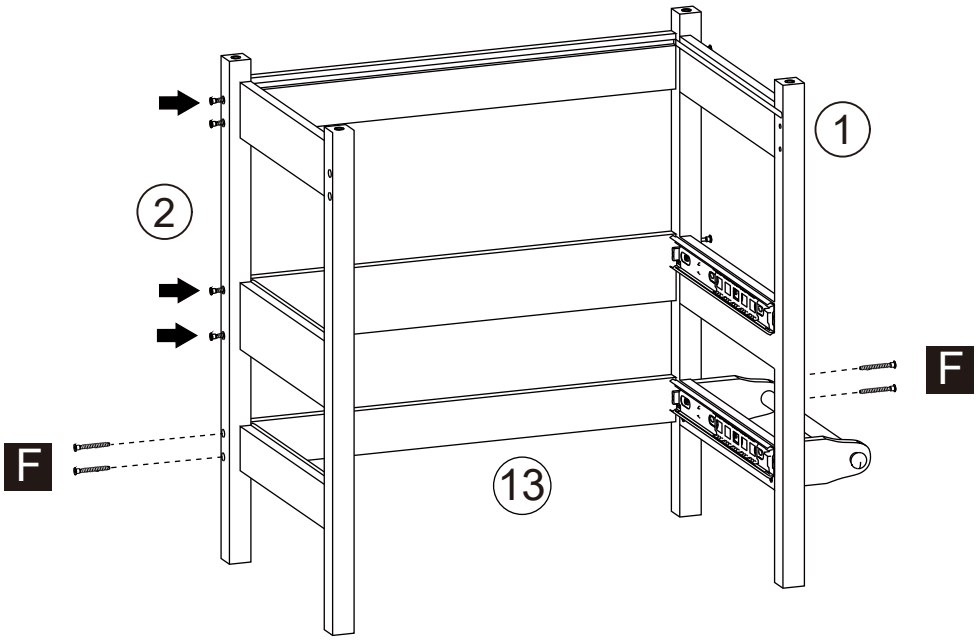

Attach Part #13 to complete this section of the frame using Bolts F x4.
After confirming all edges are aligned, fully tighten the bolts in Steps 8-10.

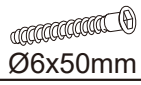

F x4

11

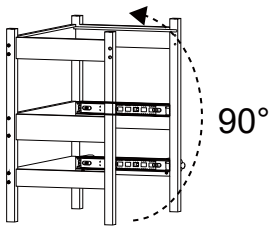

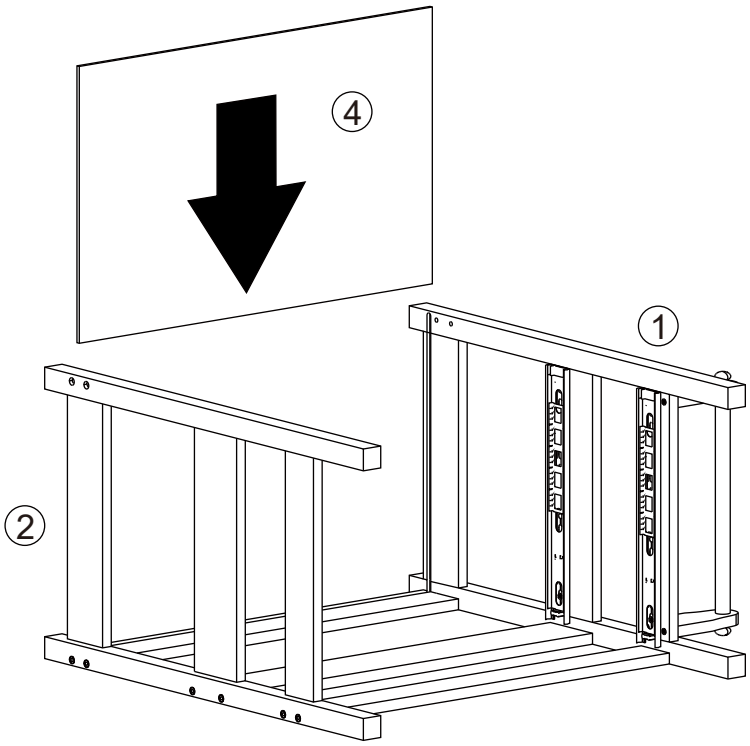

Rotate the assembled frame 90° and place Part #4 into position from above.

12

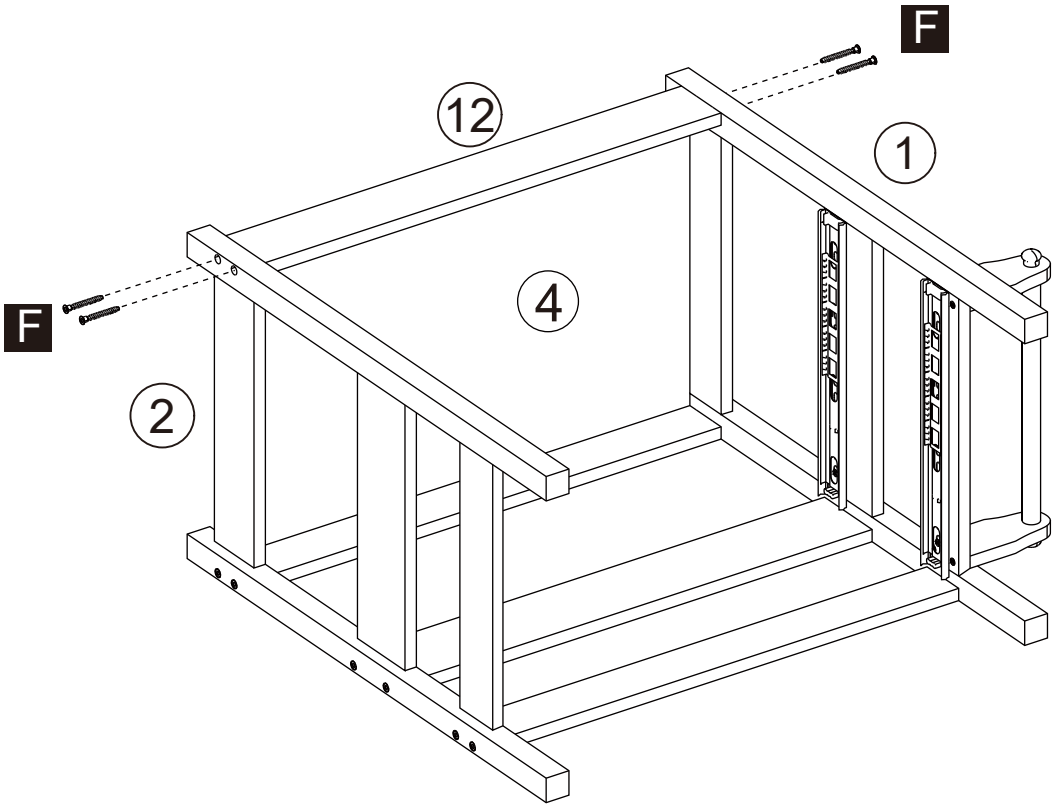

Secure Part #4 to the frame with Bolts F x4. Tighten gradually and evenly so the panel stays centered.



F x4

13

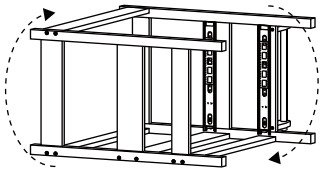

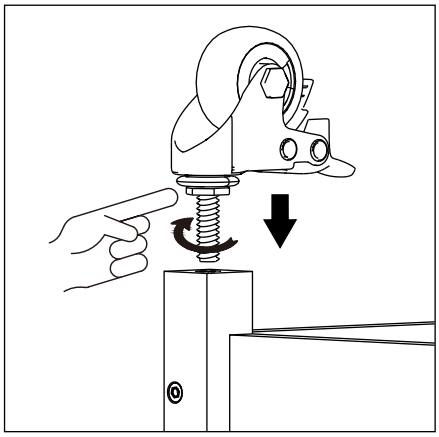

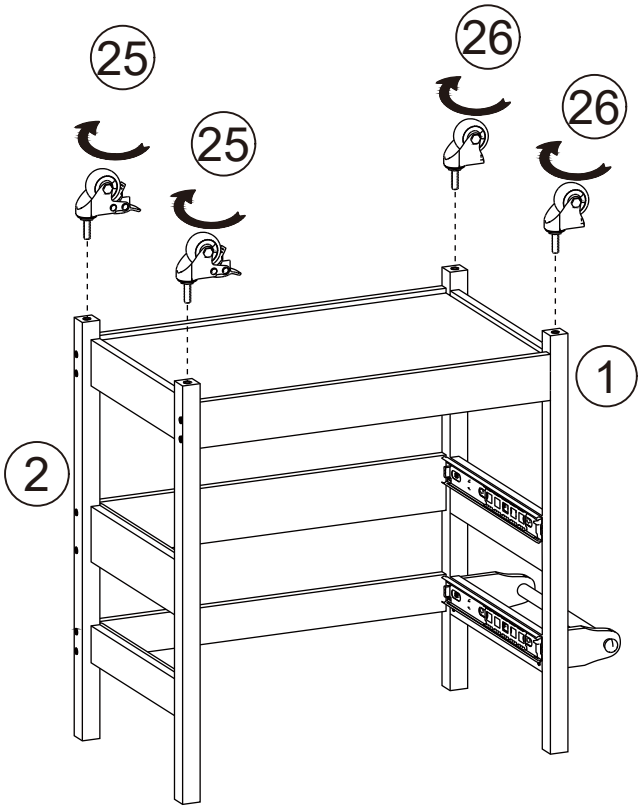

Install Wheels (Part #25 x2 and Part #26 x2).

14

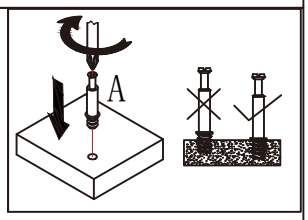

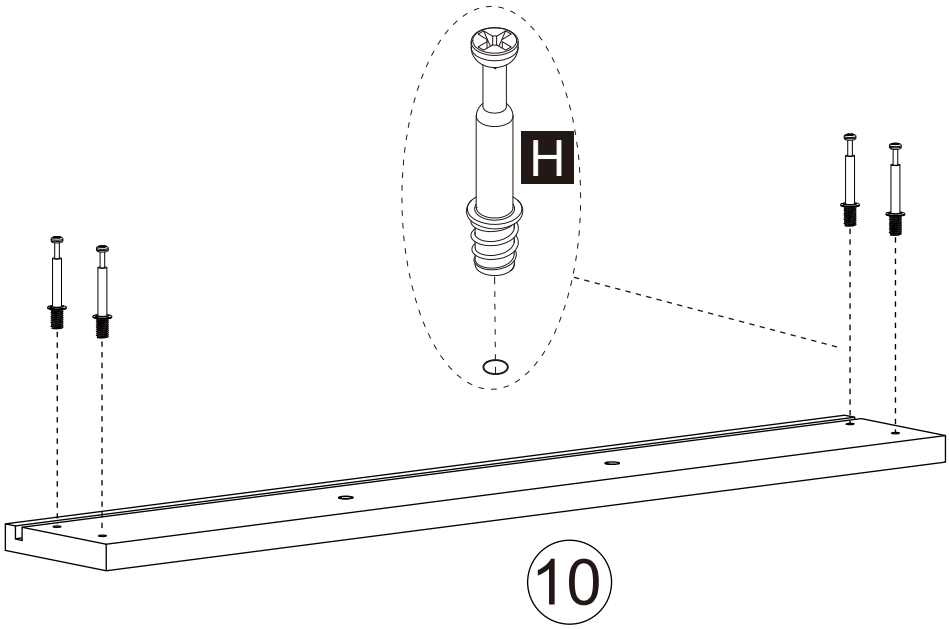

Insert Hardware H x4 into Part #10, as shown. Keep all fittings straight and in the same direction so the following parts align correctly.

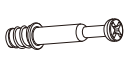 Hx4

15

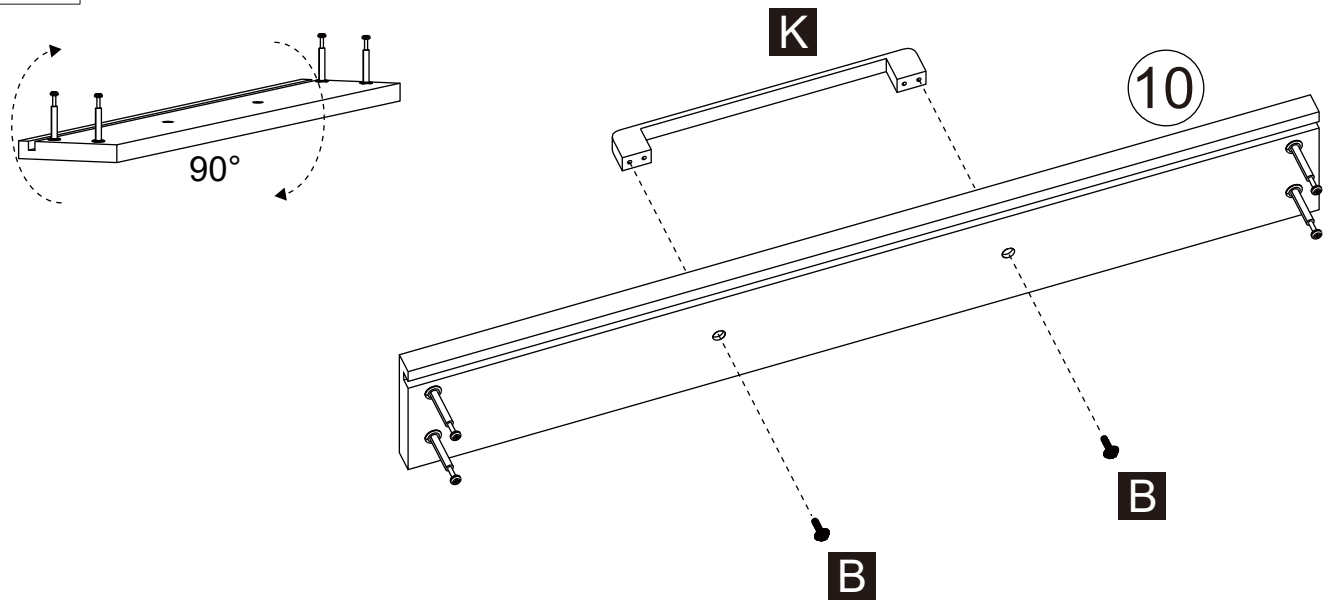

Attach Handle K to Part #10 using Screws B x2. Center the handle before fully tightening the screws.



16

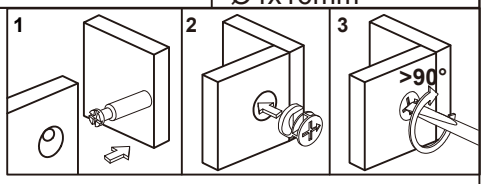

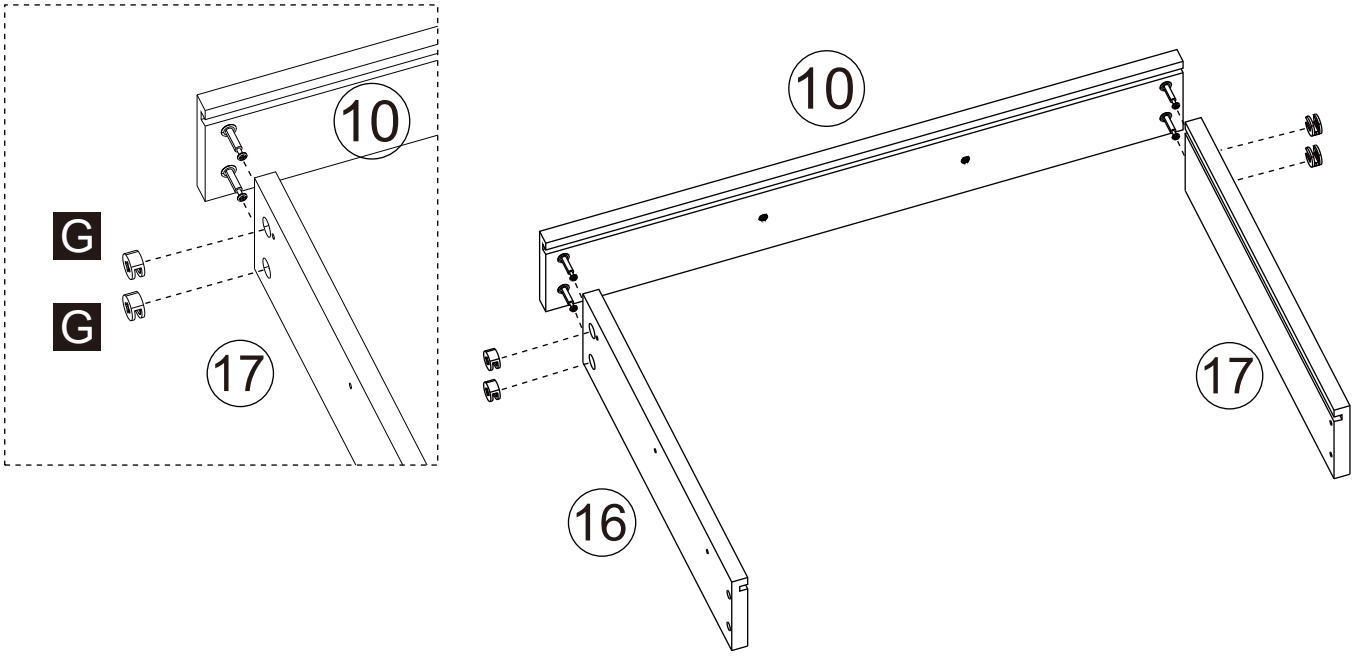

Connect Parts #16 and #17 to Part #10 and lock them with Nuts G x4. Insert all hardware first, then tighten the Nuts only after the joints are seated properly.



17

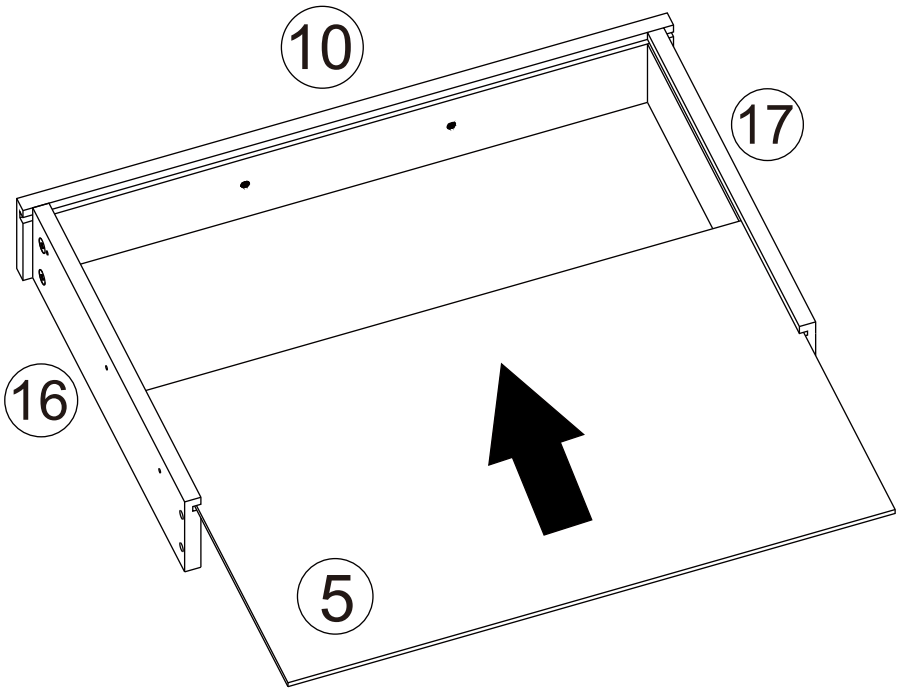

Slide Part #5 into the grooves of the assembled frame from the open side.
Make sure the panel drops fully into the slots on both sides.

18

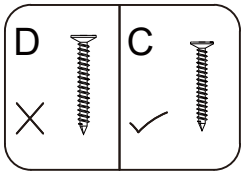

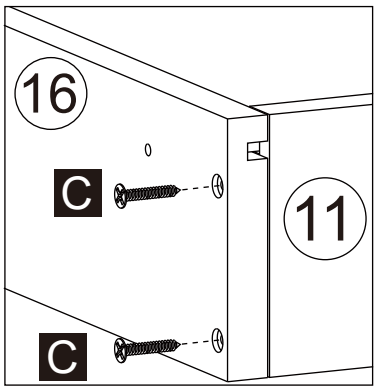

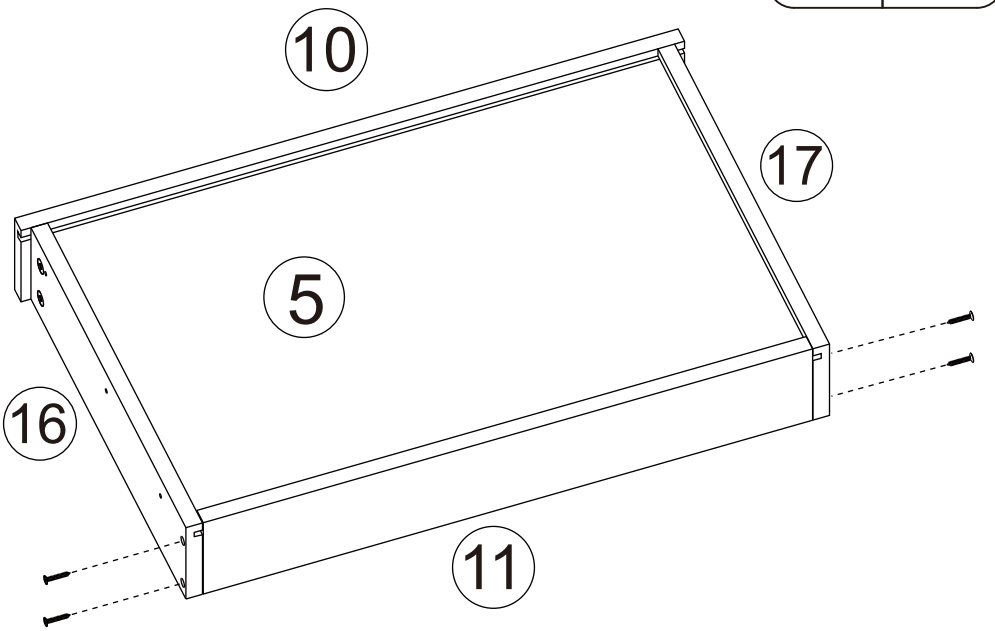

Attach Part #11 with Screws C x4, as shown.


Ø3.5x25mm Cx4

19

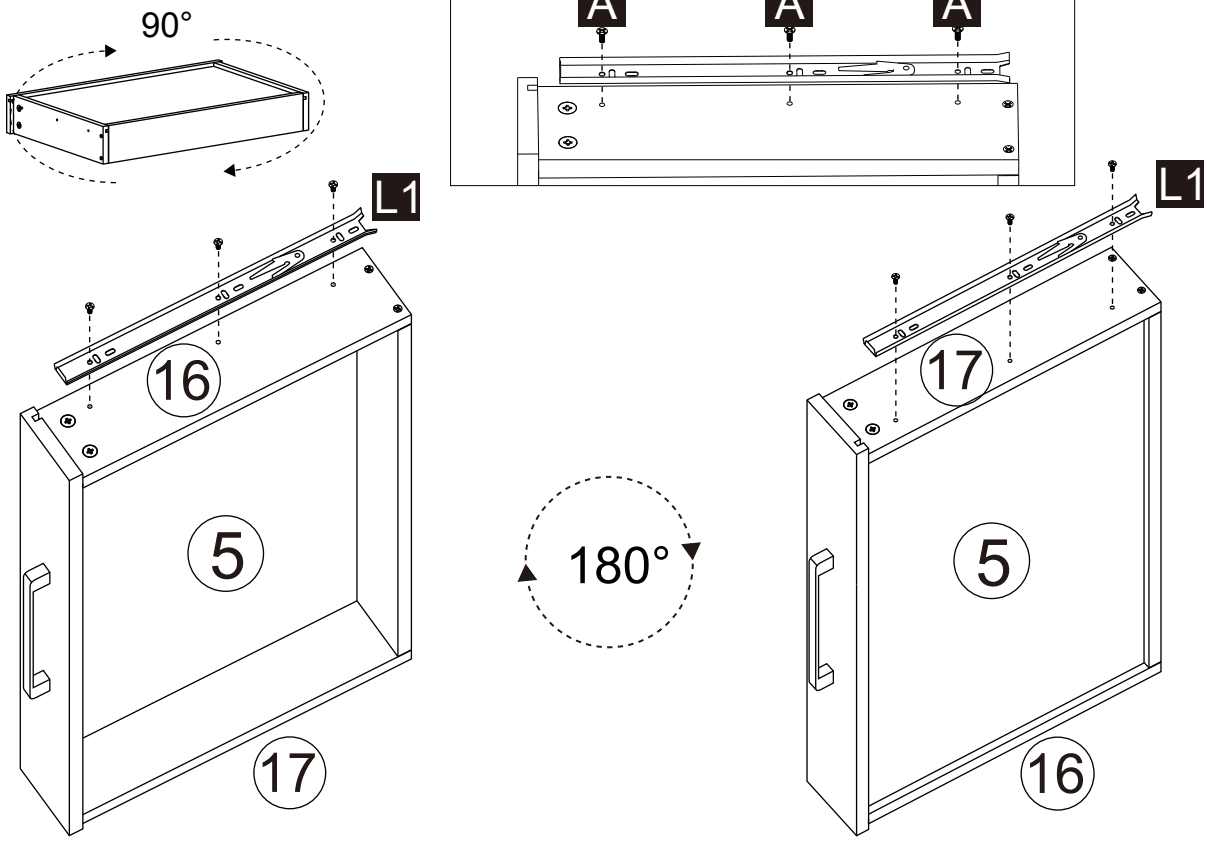

Install Inner Rails L1 on Parts #16 and #17 using Screws A x6. Follow the diagram for left and right orientation, and keep the rails level with each other.



20

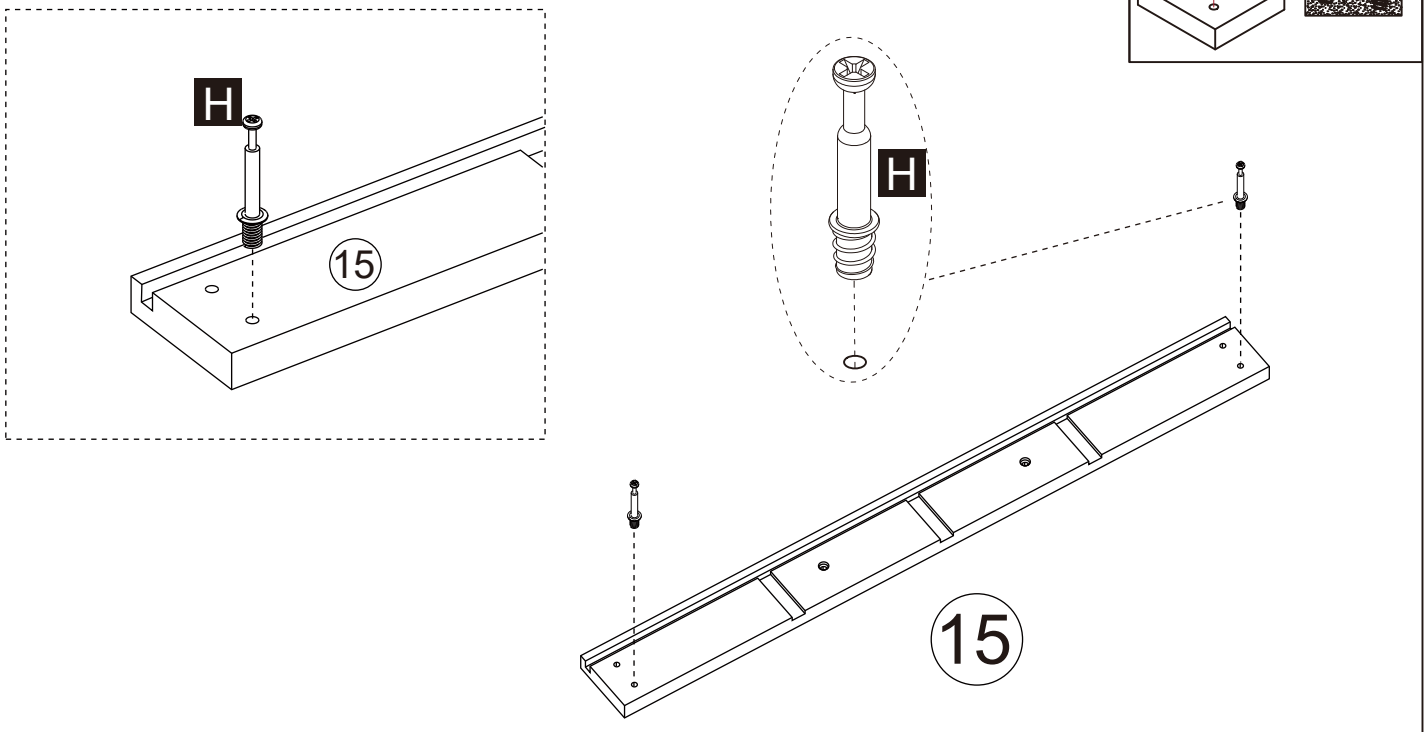

Insert Hardware H x2 into Part #15, as shown. Ensure the fittings are fully seated so the next assembly step lines up correctly.



21

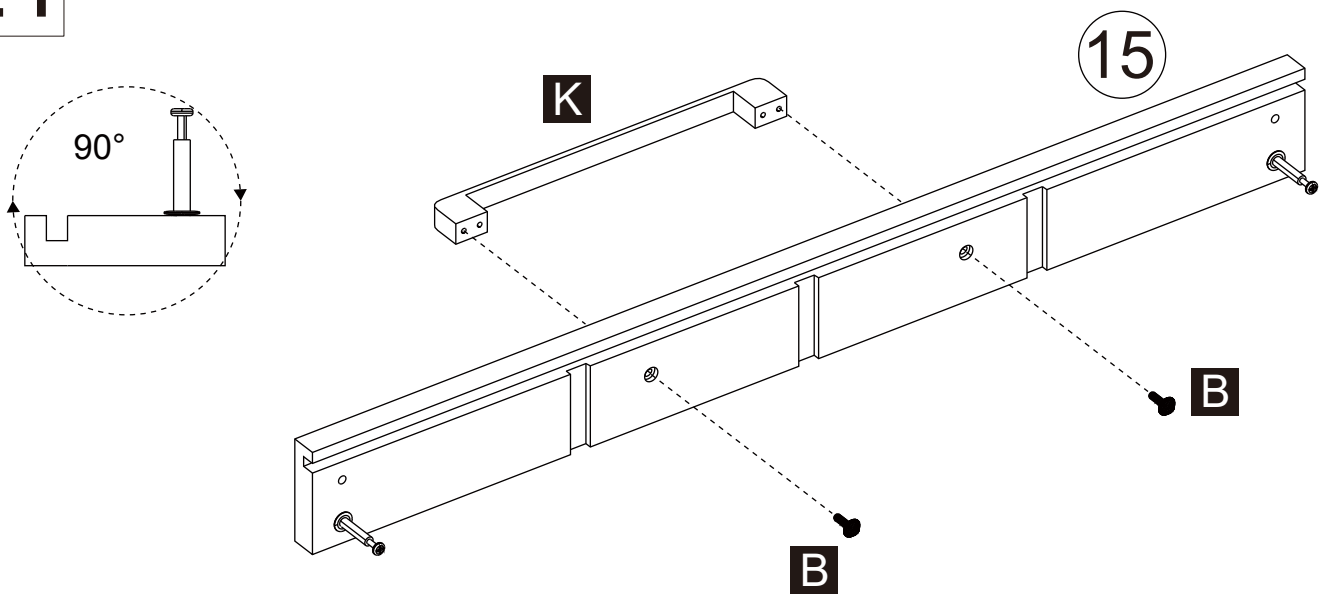

Attach Handle K to Part #15 using Screws B x2. Keep the handle centered and tighten both screws evenly.

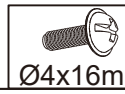

B x2

22

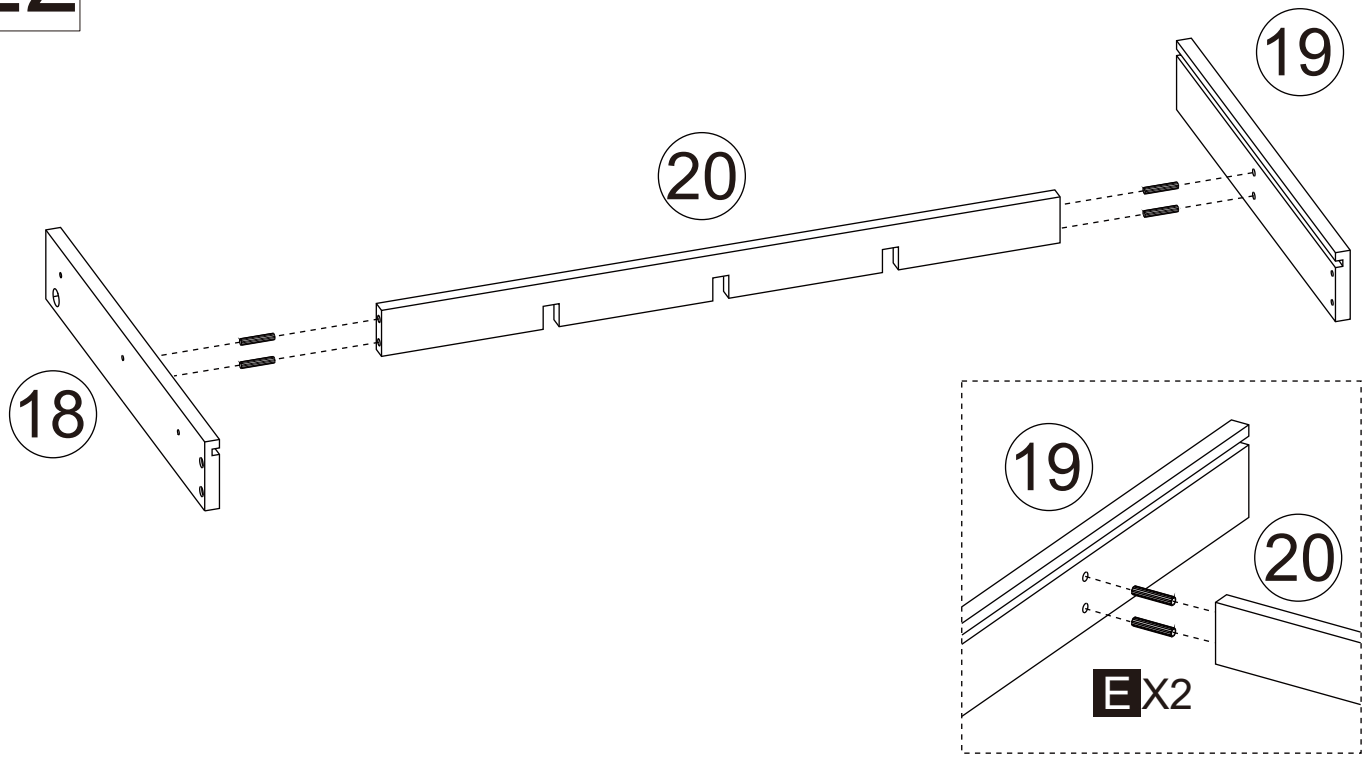

Assemble Parts #18, #19 and #20 using Dowel E x4.

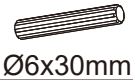

Ex4

23

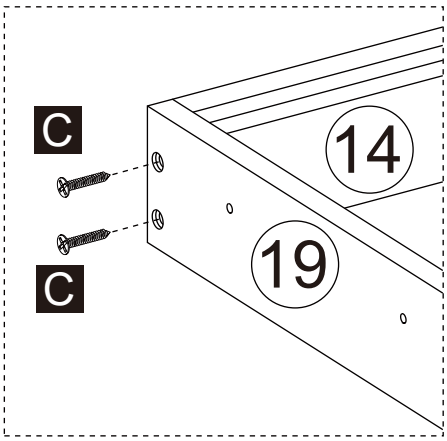

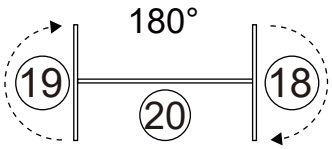

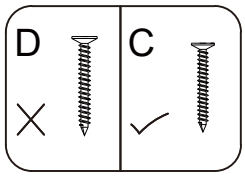

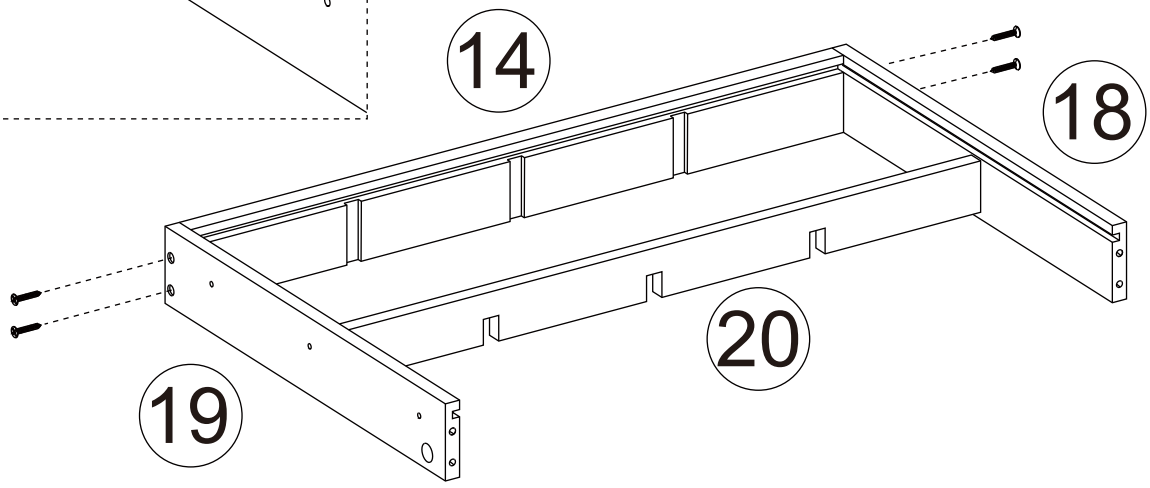

Attach Part #14 to the frame from Step 22 with Screws C x4. Make sure the frame is facing the correct direction before tightening.

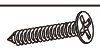
Cx4
Ø3.5x25mm

24

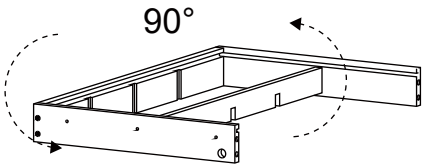

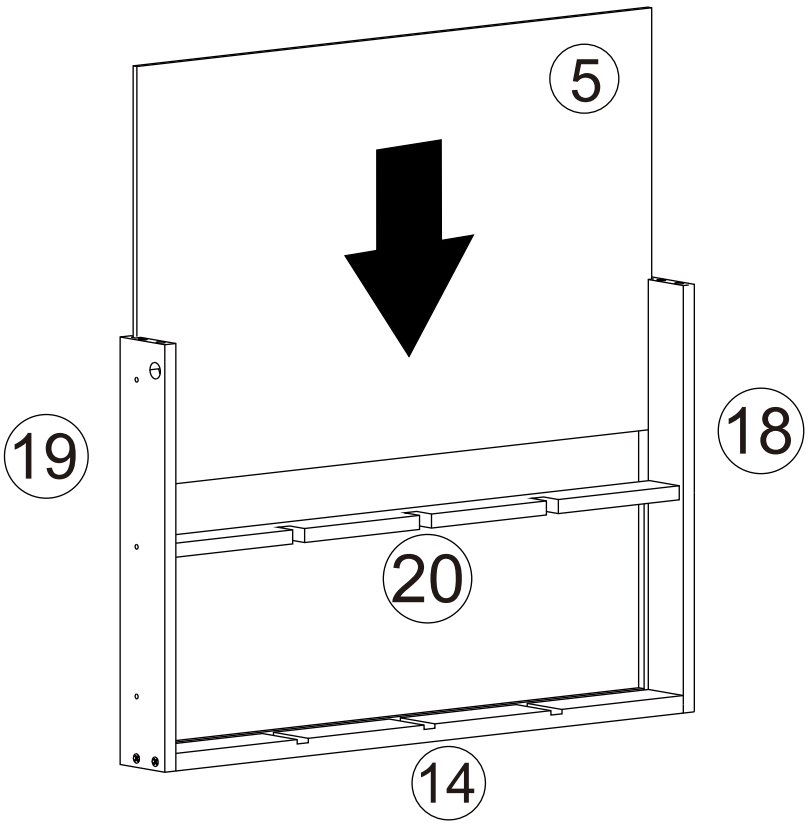

Insert Part #5 downward into the frame grooves, as shown.

25

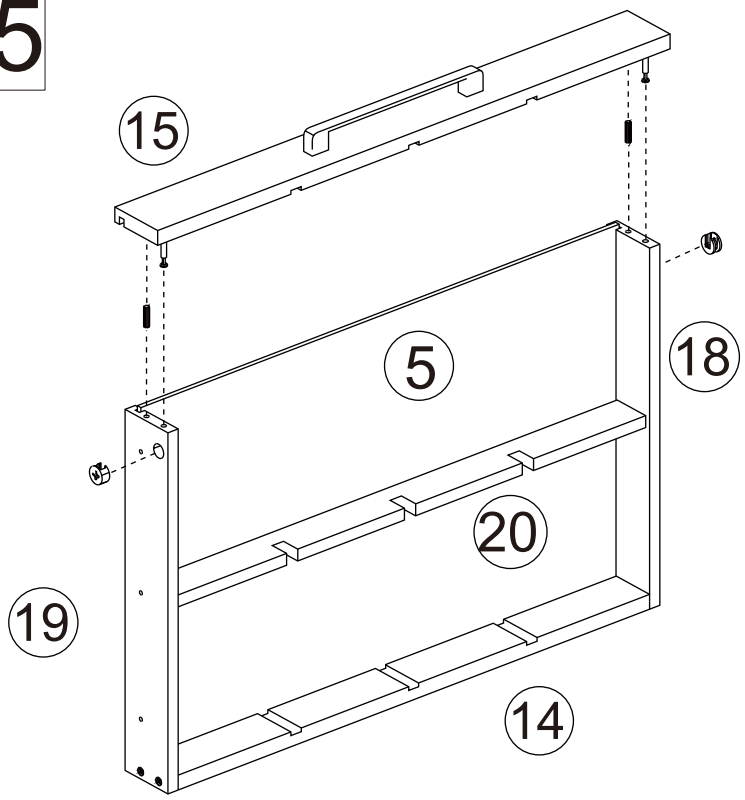

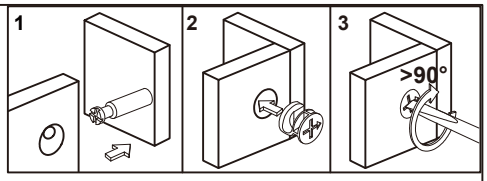

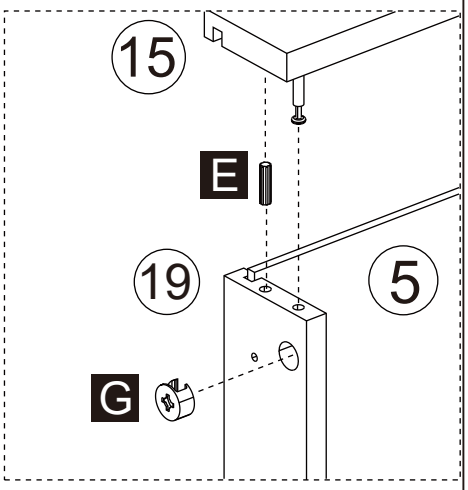

Attach Part #15 to the frame using Dowel E x2 and Nuts G x2. Tighten only after all connection points are engaged and the drawer box is square.


Gx2

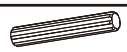
Ø6x30mm Ex2

26

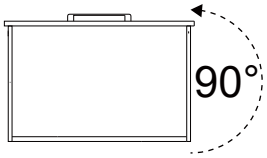

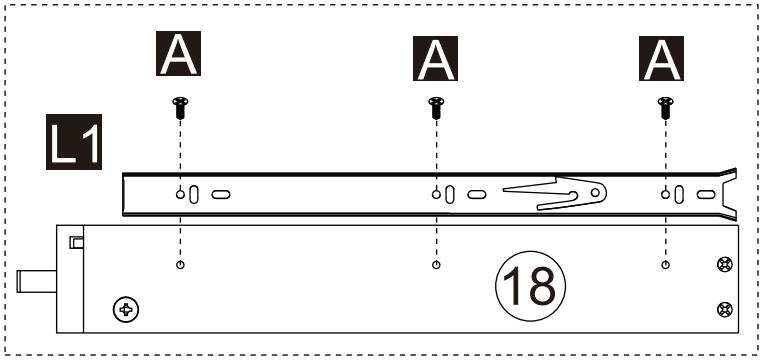

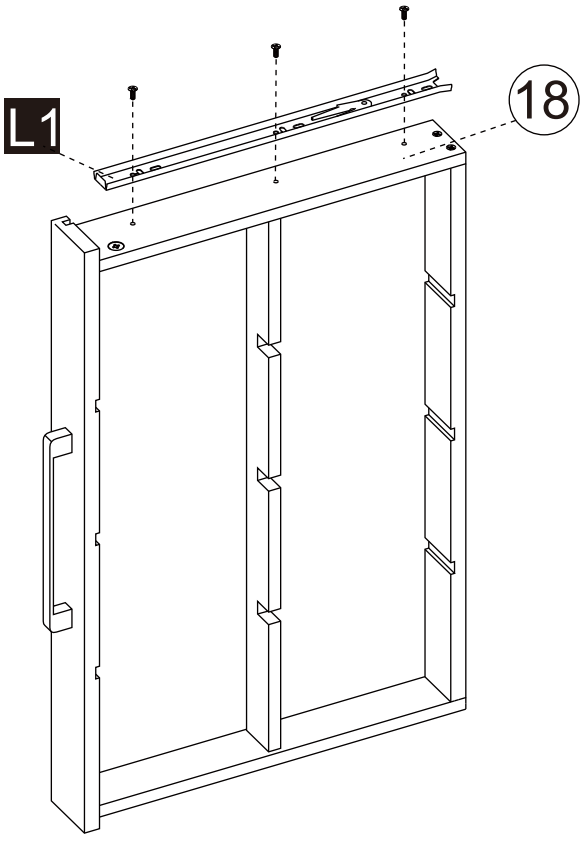

Fasten Inner Rail L1 to Part #18 with Screws A x3. Keep the rail straight, and align the front end as shown in the detail diagram.


Ø3x12mm Ax3

27

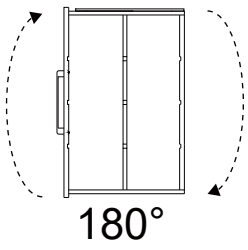

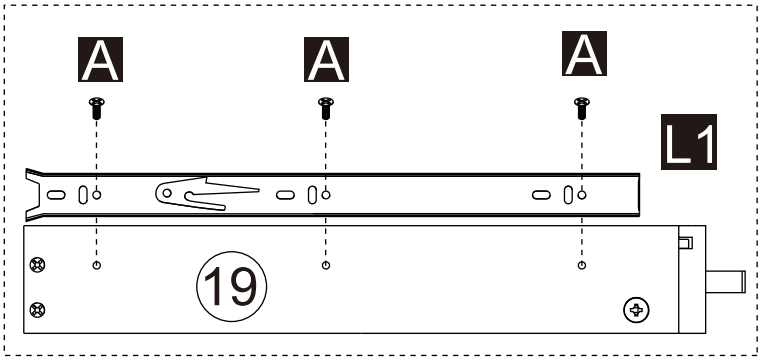

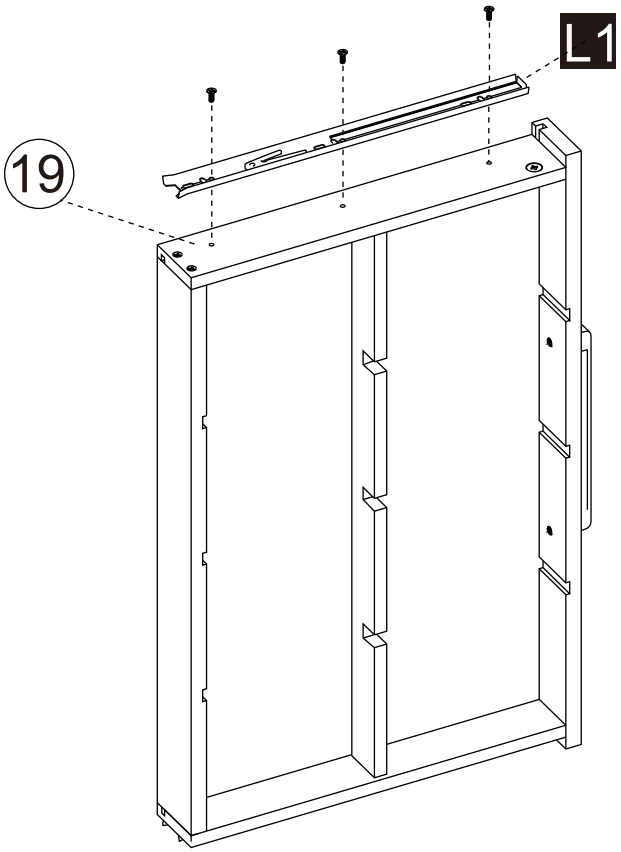

Fasten the second Inner Rail L1 to Part #19 with Screws A x3.



Ax3

28

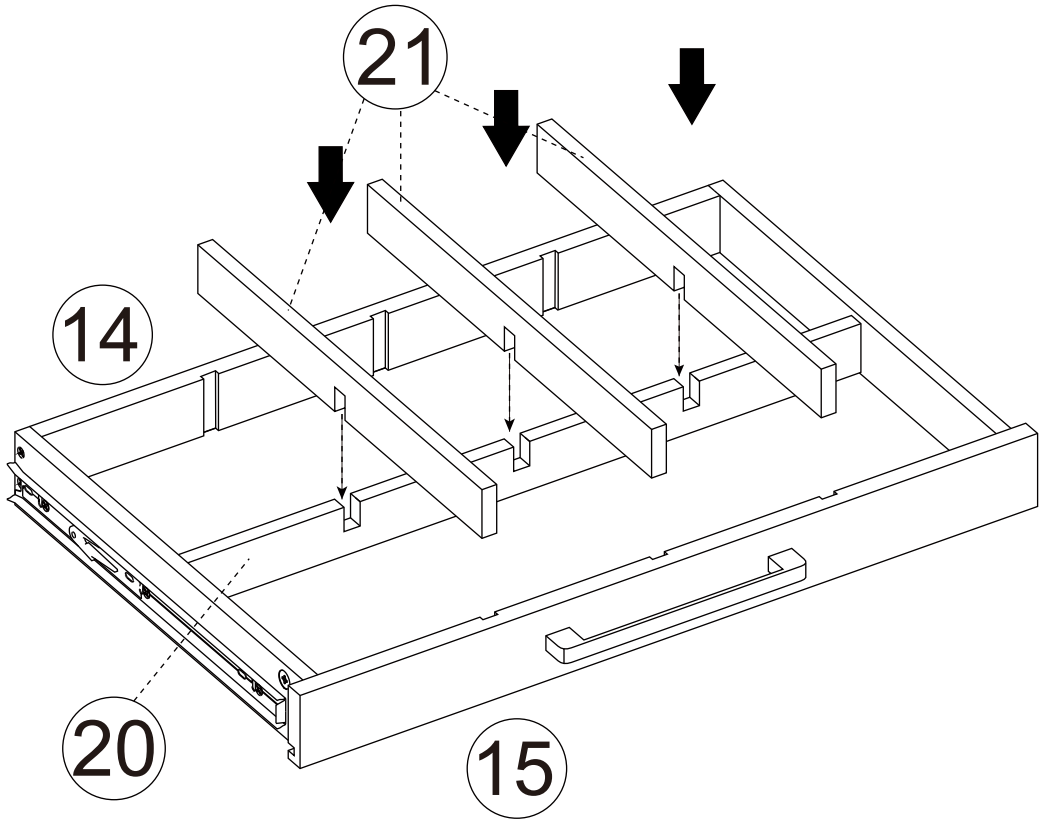

Insert Part #21 x3 into the drawer organizer assembly. Press each divider straight down into place so all slots are fully engaged.

29

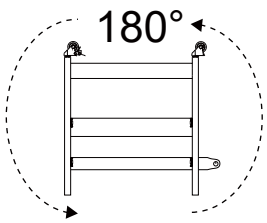

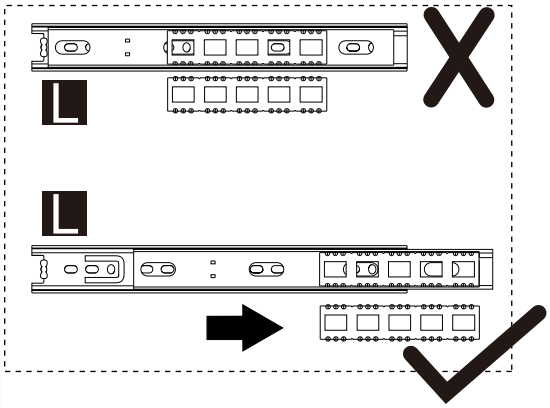

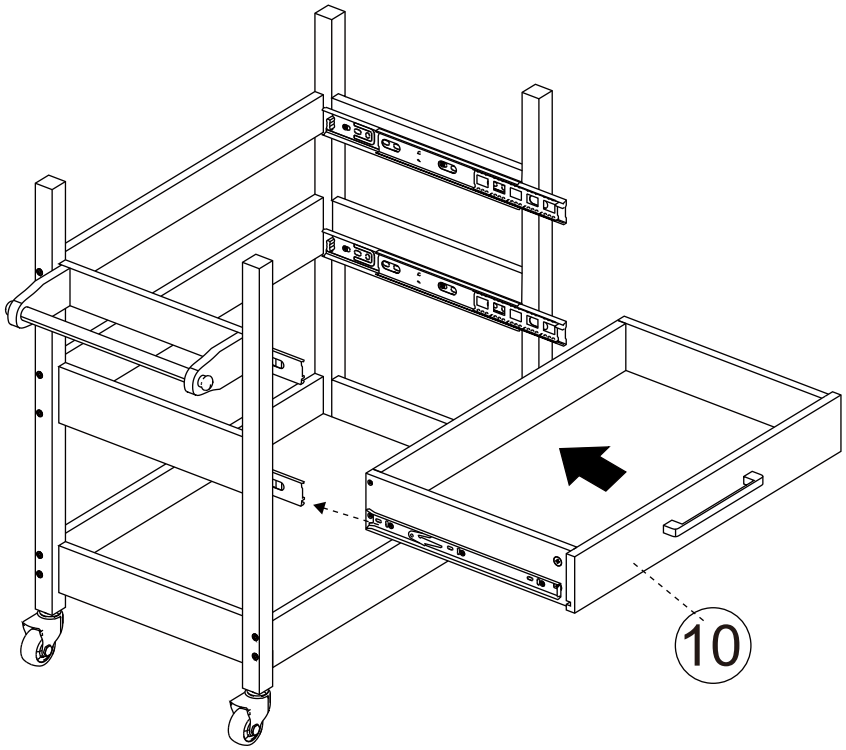

Before installing the drawer, make sure the silver ball-bearing carrier inside the outer slide rail (Part #L) is pulled forward to the rail opening, as shown on the left side of the illustration. Then slide the assembly from Steps 14–19 into the upper set of slide rails. Keep both sides aligned and push it in slowly.

30

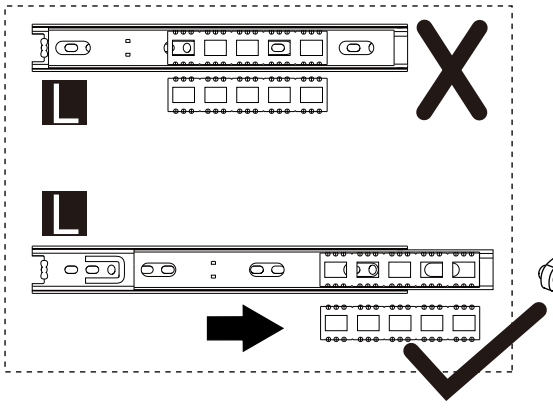

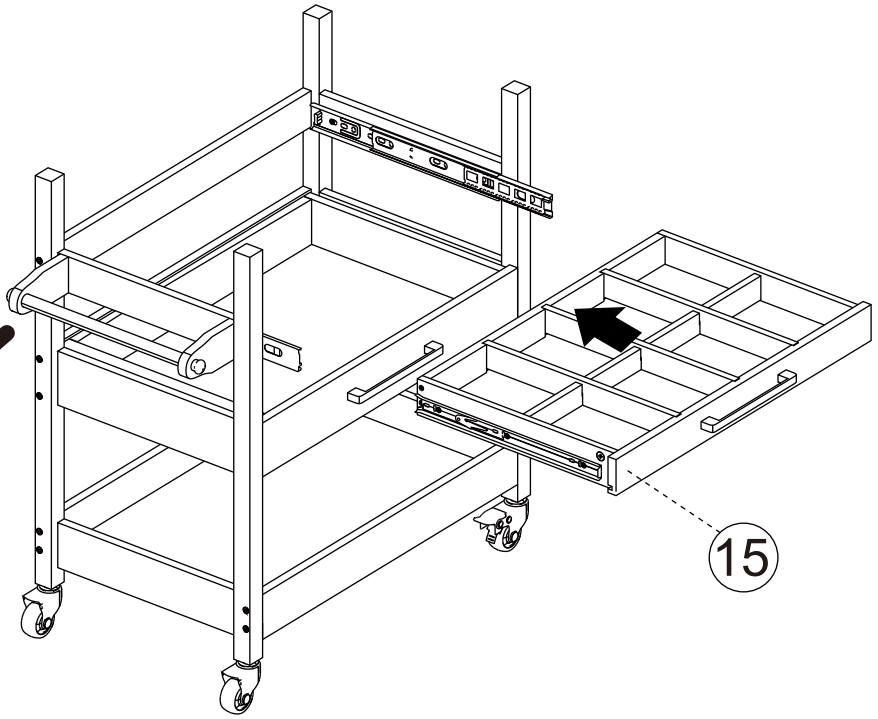

Slide the assembly from Steps 20-28 into the lower set of slide rails. If resistance occurs, pull it back out and confirm that the inner and outer rails are aligned correctly.

31

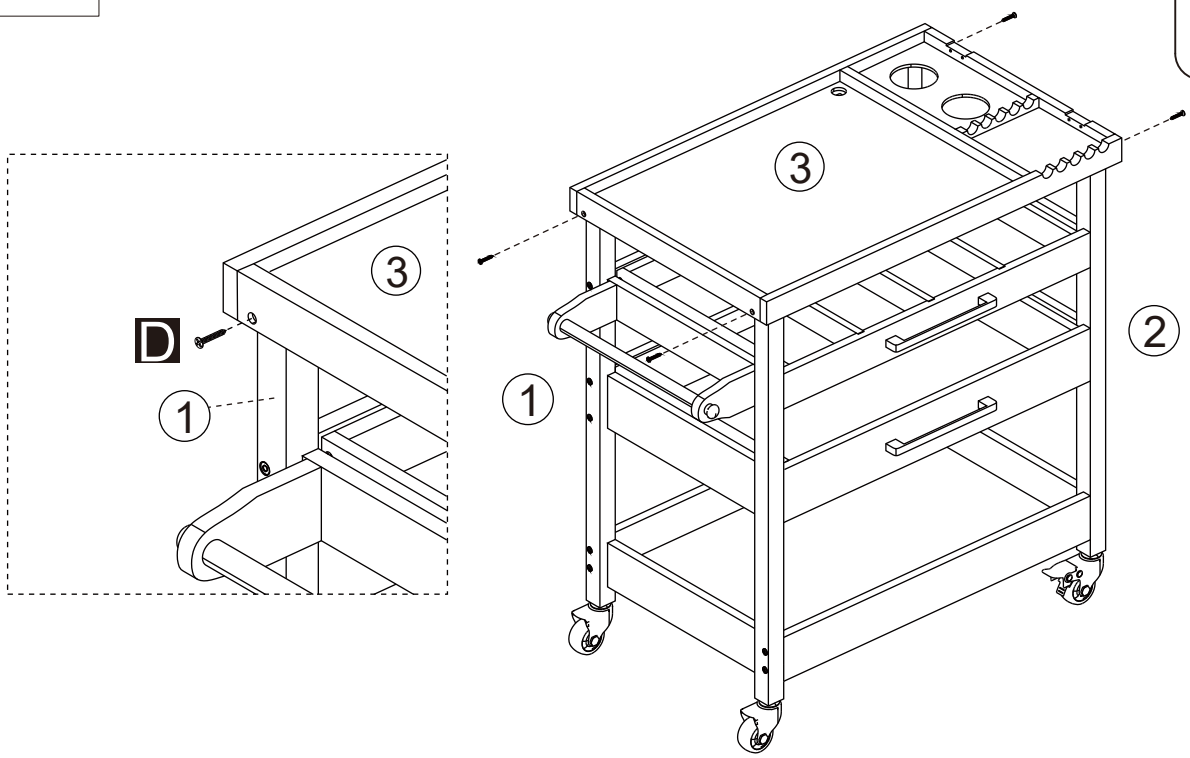

Place Part #3 on top of the main unit and secure it with Screws D x4.
Keep the top panel centered so the overhang is even on all sides.



32

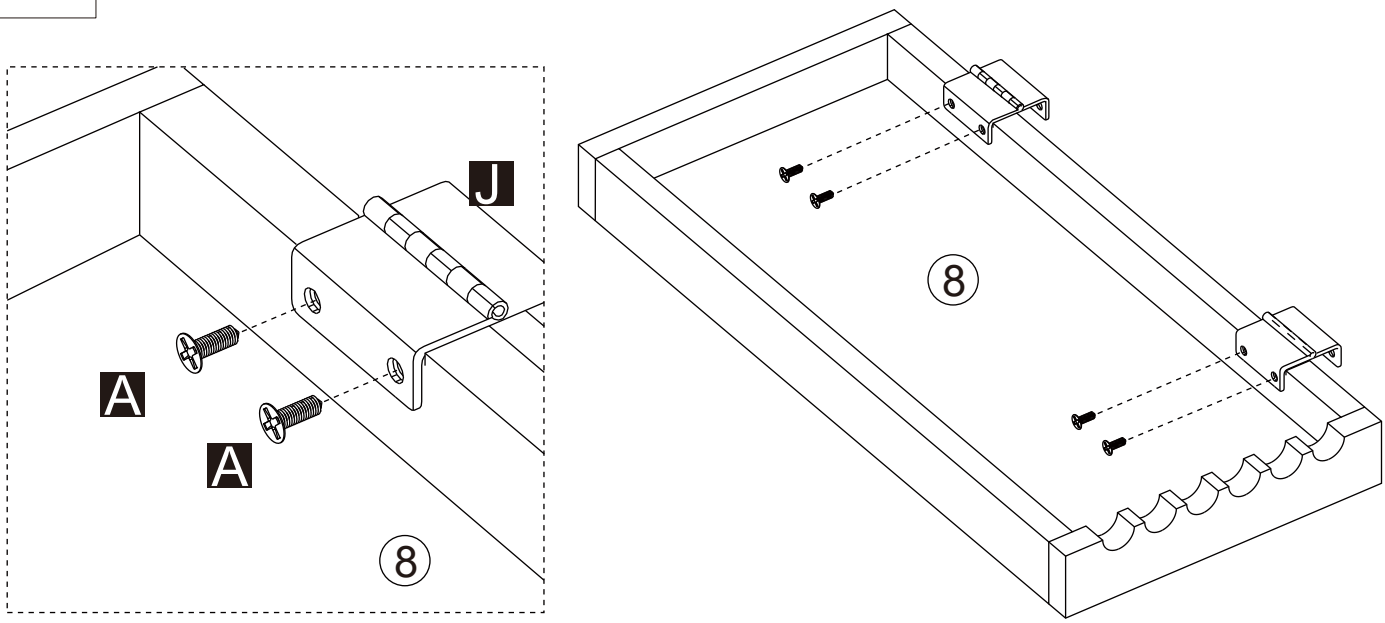

Attach Part #8 using Brackets J x2 and Screws A x4, as shown. Start all screws first, then tighten after confirming the bracket position is correct.

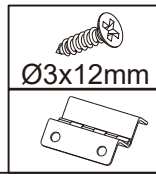

33

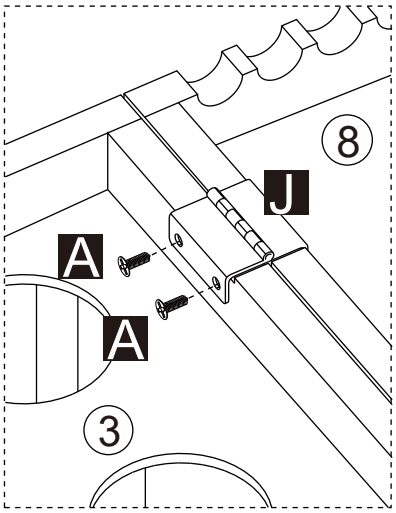

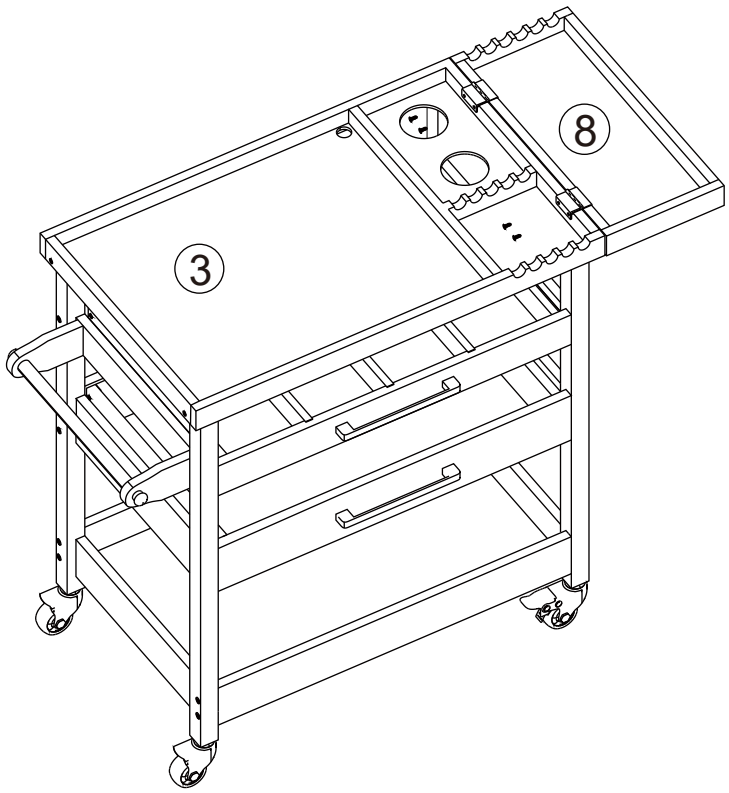

Secure Part #8 to Part #3 using Screws A x4. After installation, check that the extension piece opens, closes, or rests properly without rubbing.


Ø3x12mm Ax4

34



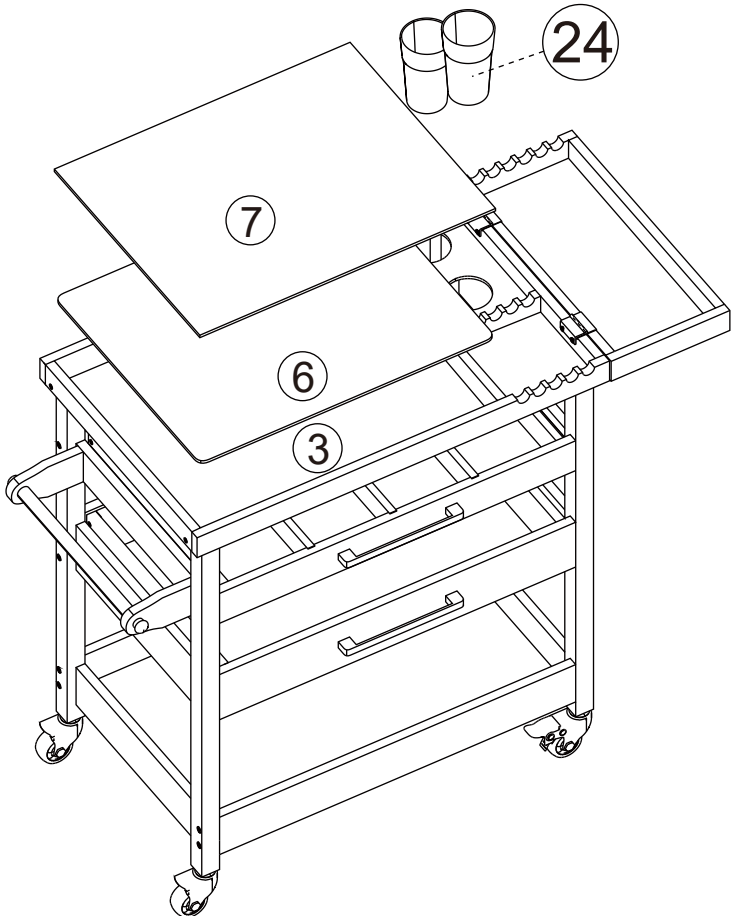

Place Parts #6 and #7 on the top, and then install Cups #24 in their holders. Finally, check that all drawers, trays, and casters operate smoothly before use.