80072 Product Installation Instructions

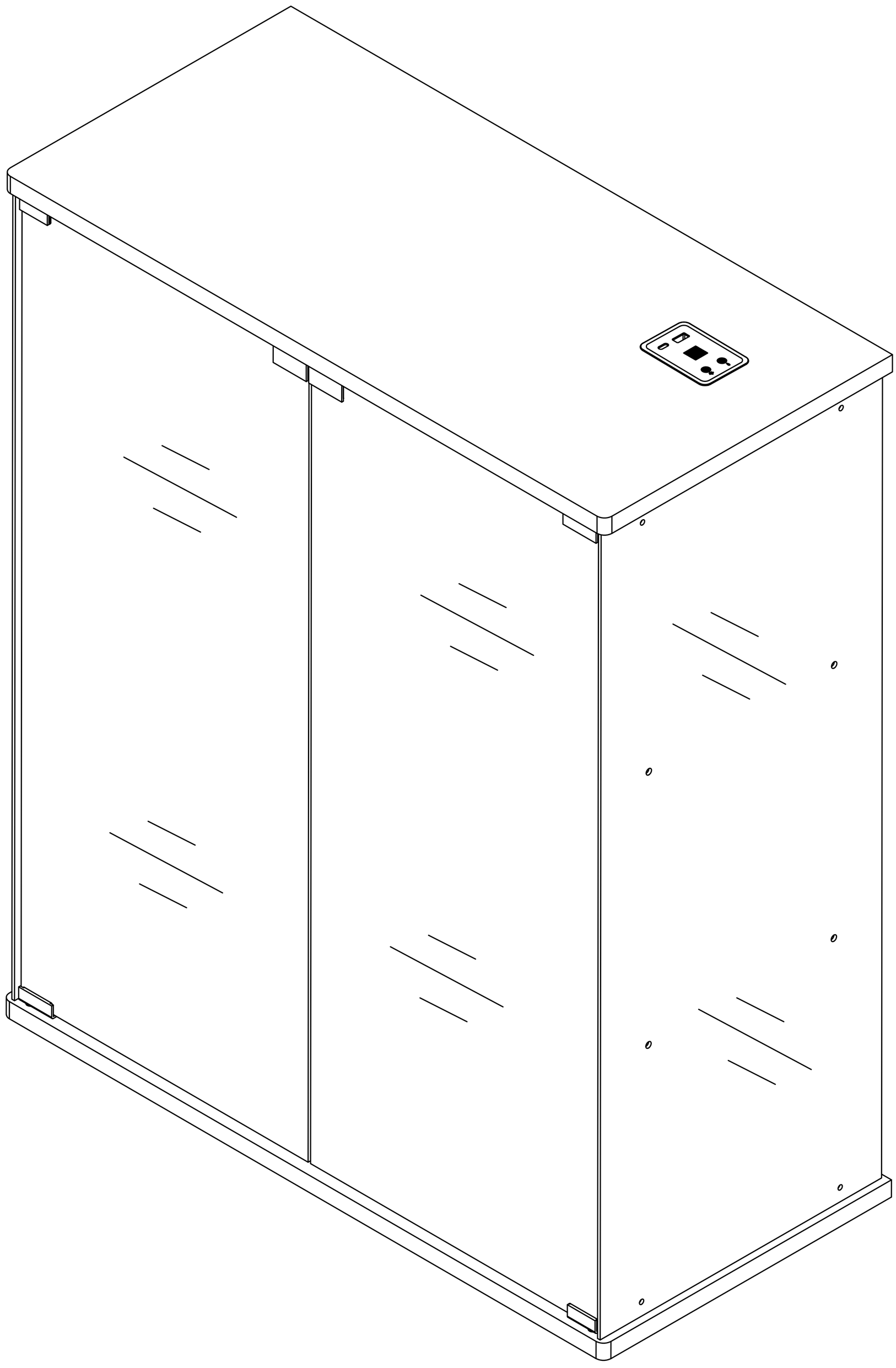

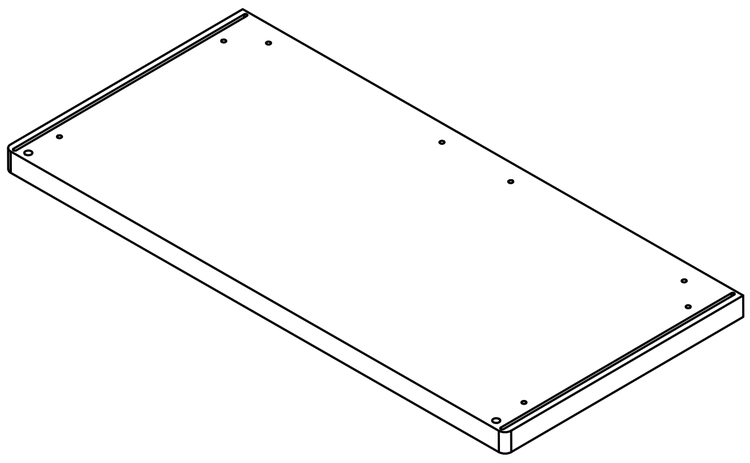

01x1

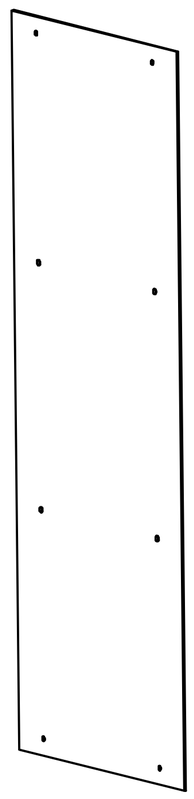

02x2

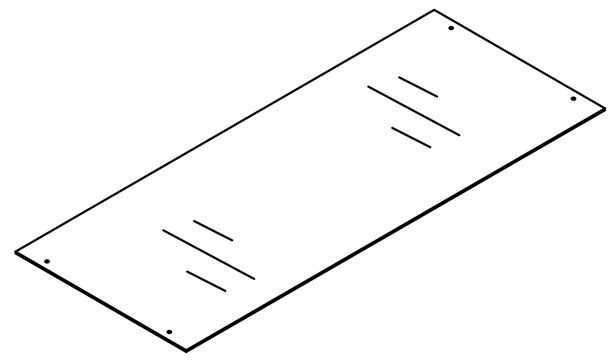

03x2

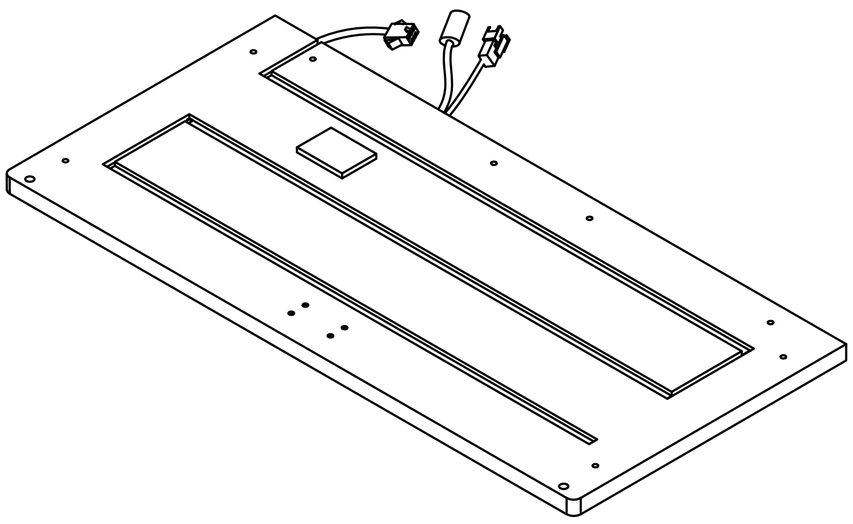

04x1

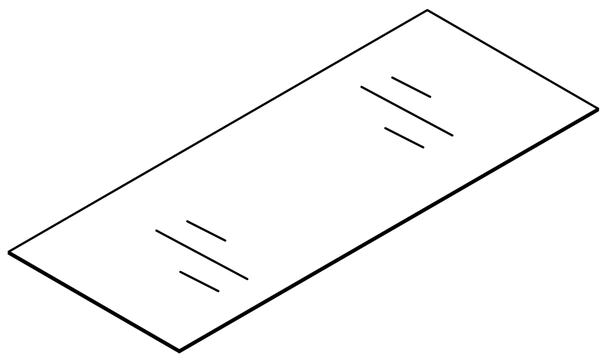

05x2

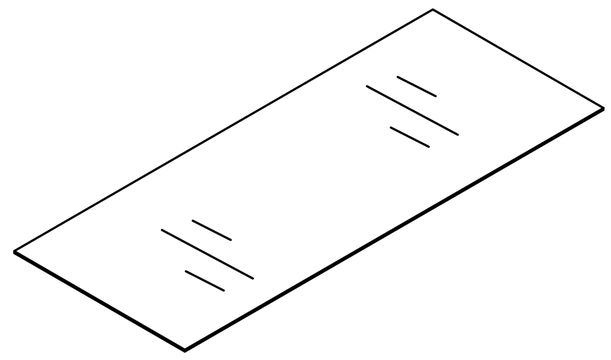

06x2

A	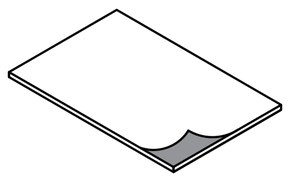	Non-slip pads (50x10mm)	4pcs +2pcs
B	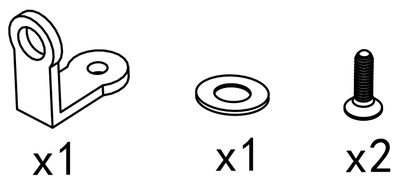	Corner Bracket,,Screw (4x8mm)	16pcs +4pcs
C	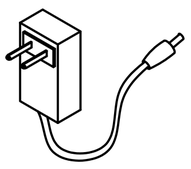	AC/DC Adapter(12V⎓2.0A)	1pcs
D	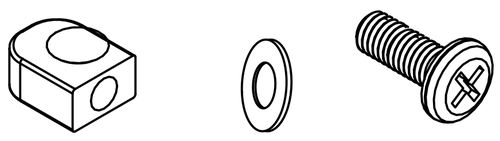	Laminate support nail	8pcs +2pcs
E		Rebound device & Screw (3x16mm)	4pcs +2pcs 1pcs
	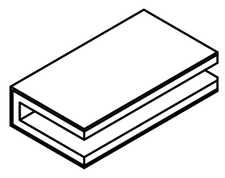	Iron sheet	2pcs
	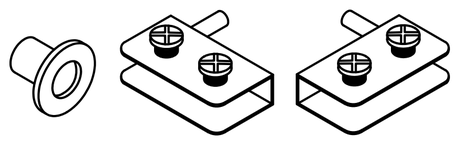	Hinge	4pcs 2pcs 2pcs
F	 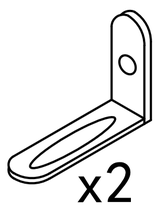	Anti Fall Hardware 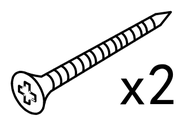	

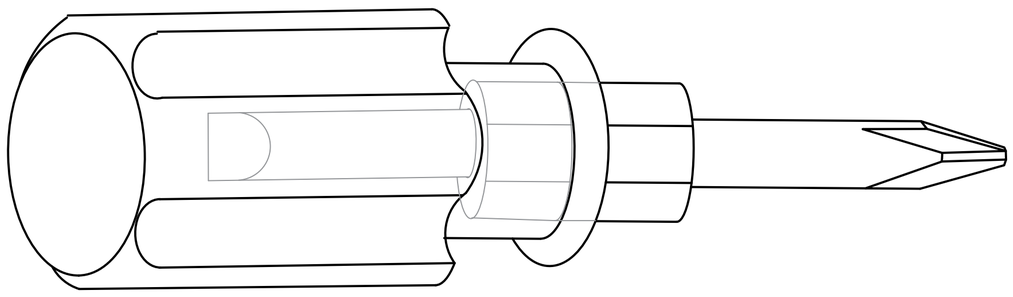

1pcs

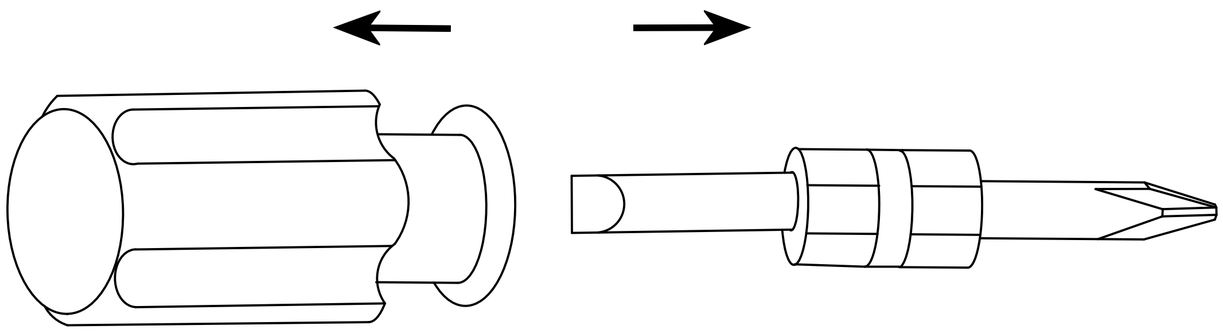

Double-head screwdriver, use as required

Product structure decomposition

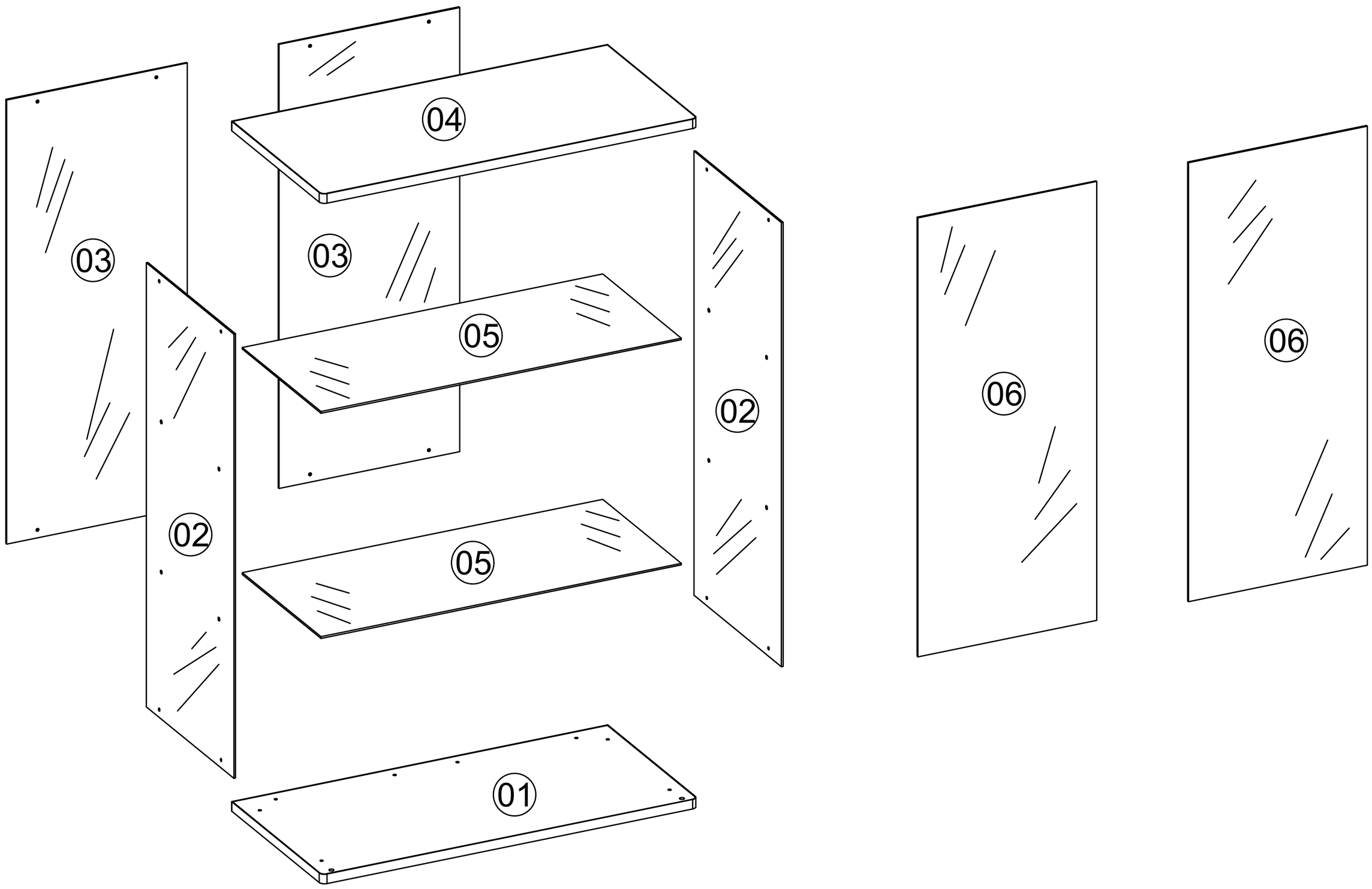

Step 1

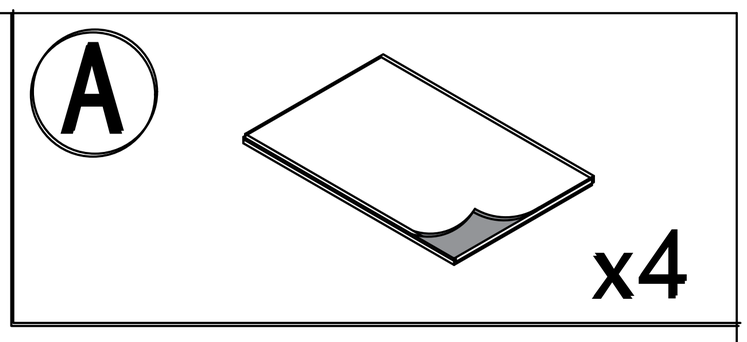

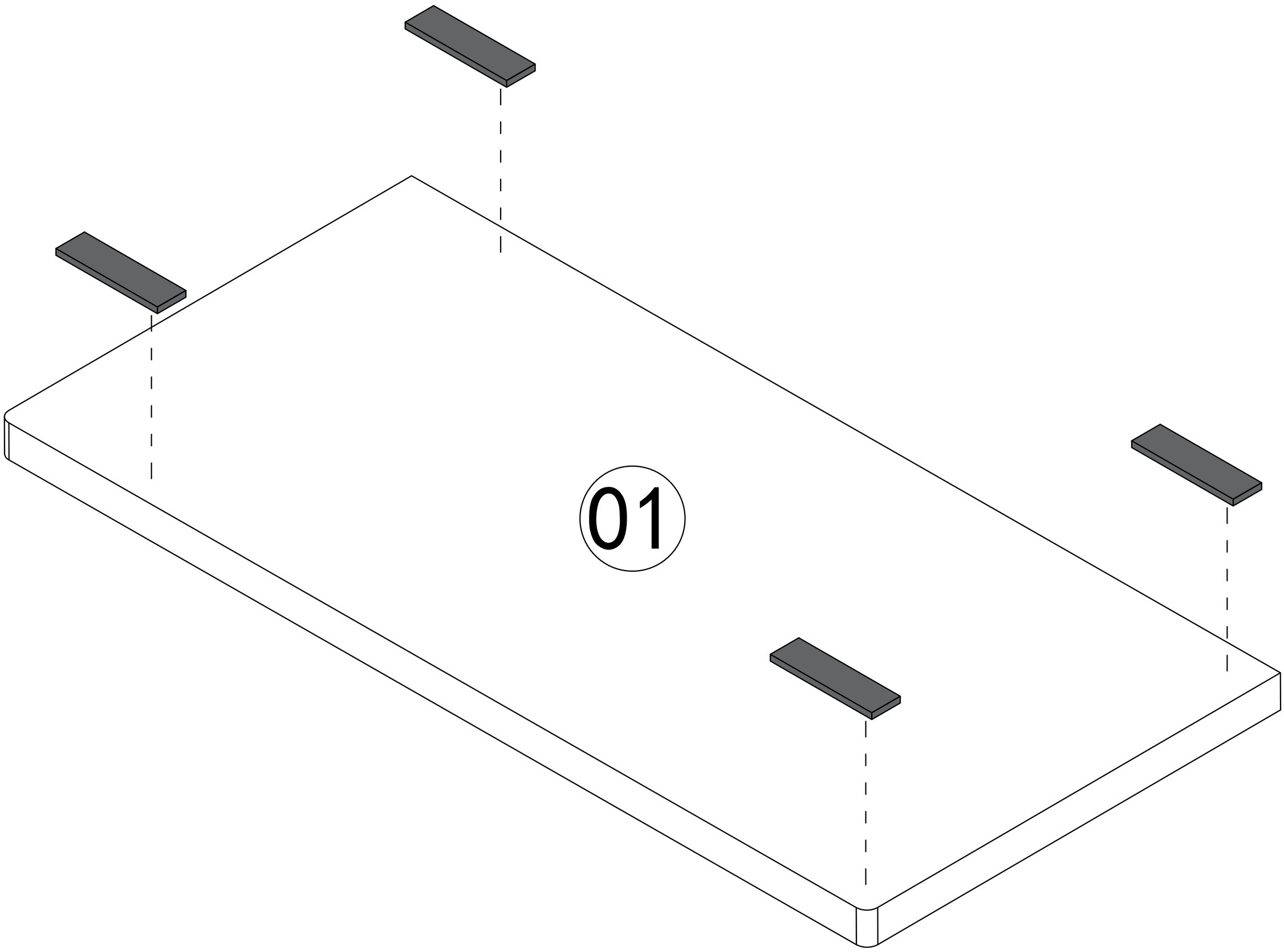

Step 2

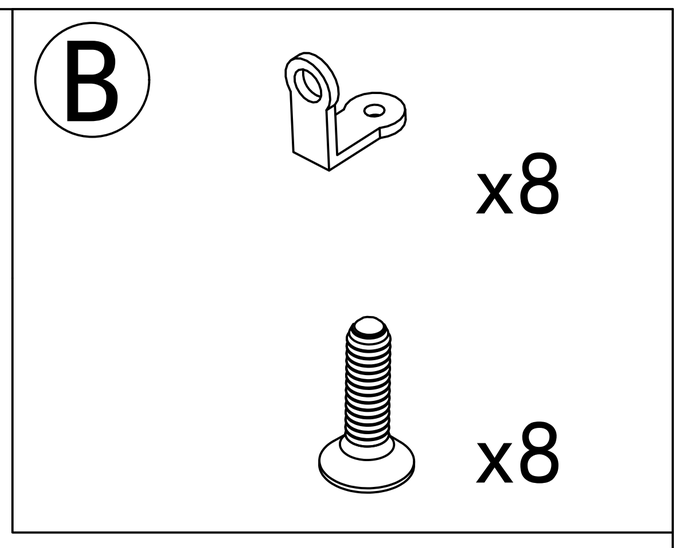

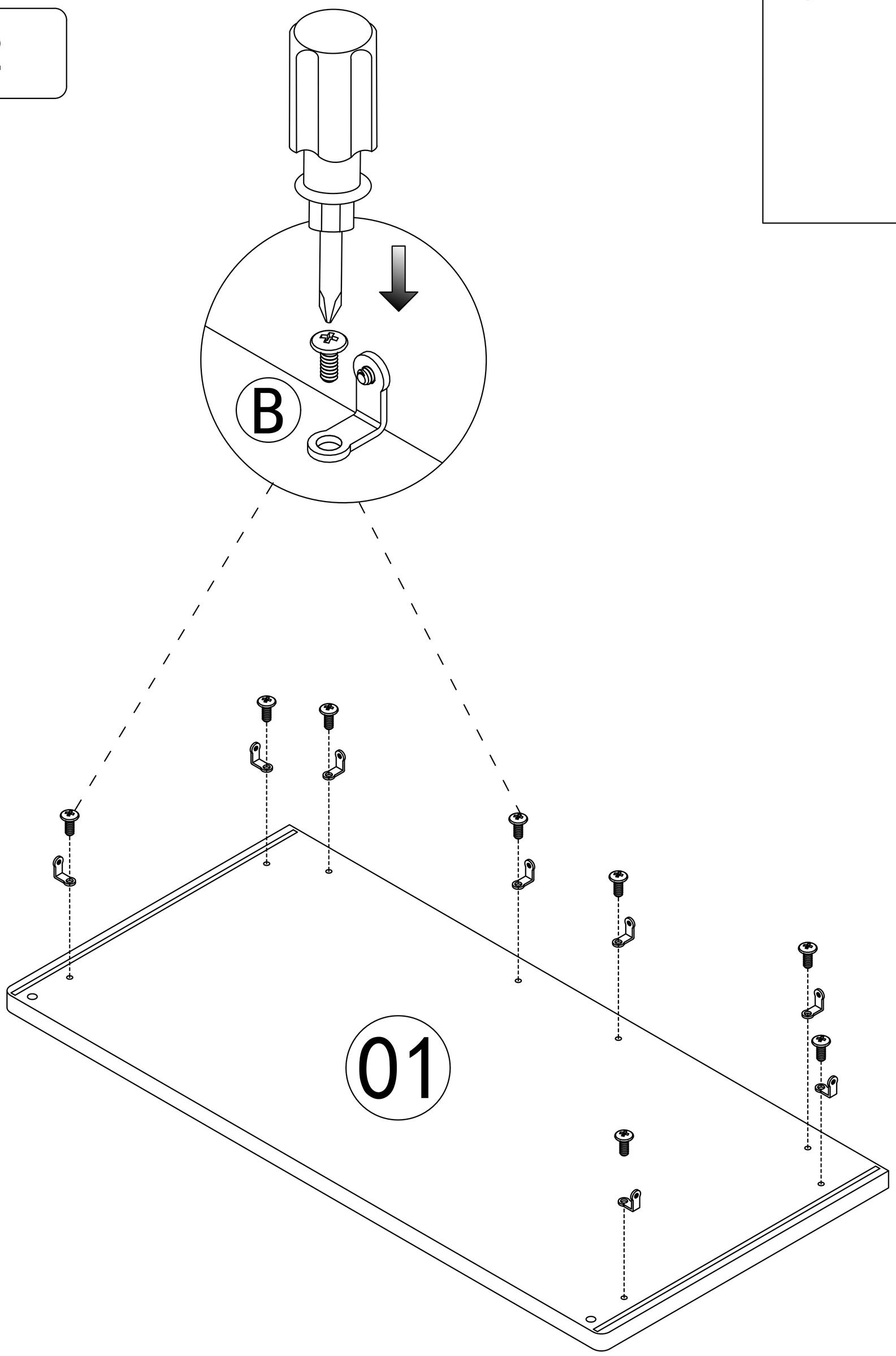

Install this hole

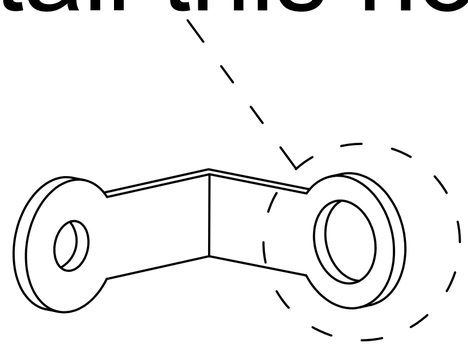

Step 3

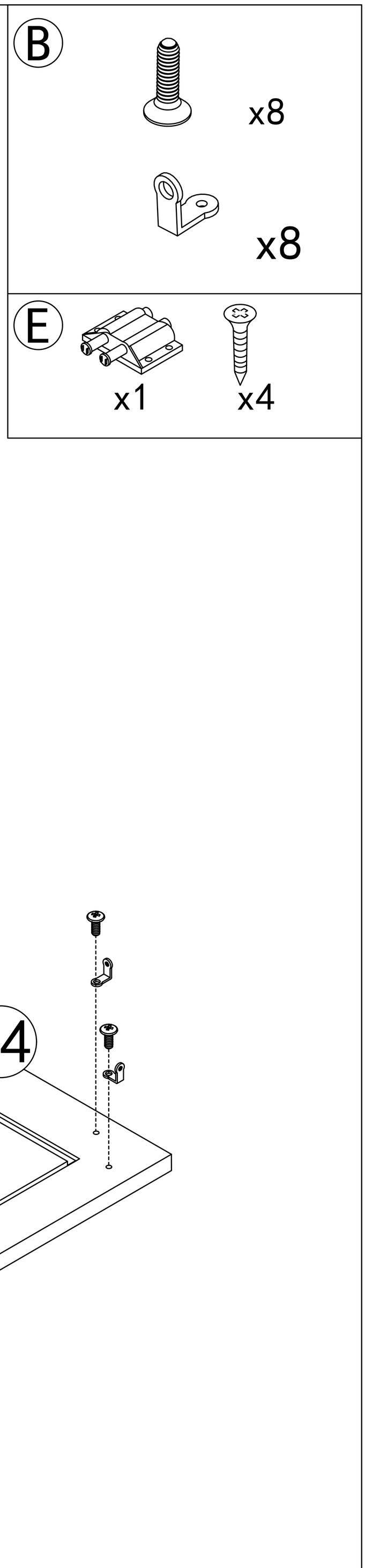

Install this hole

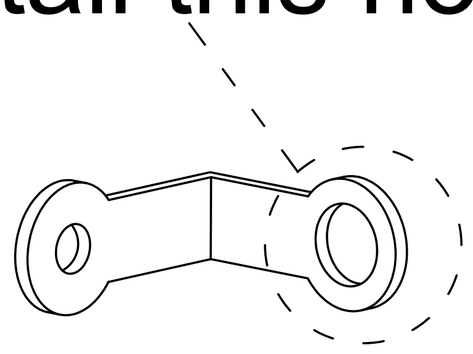

Step 4

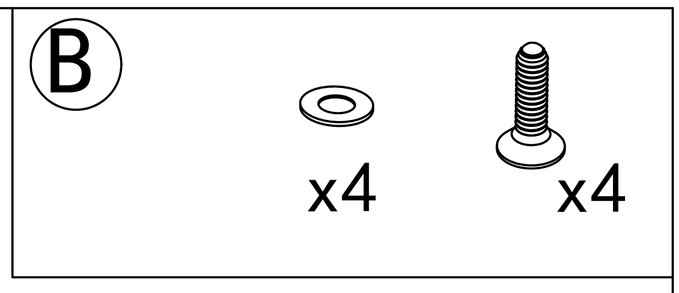

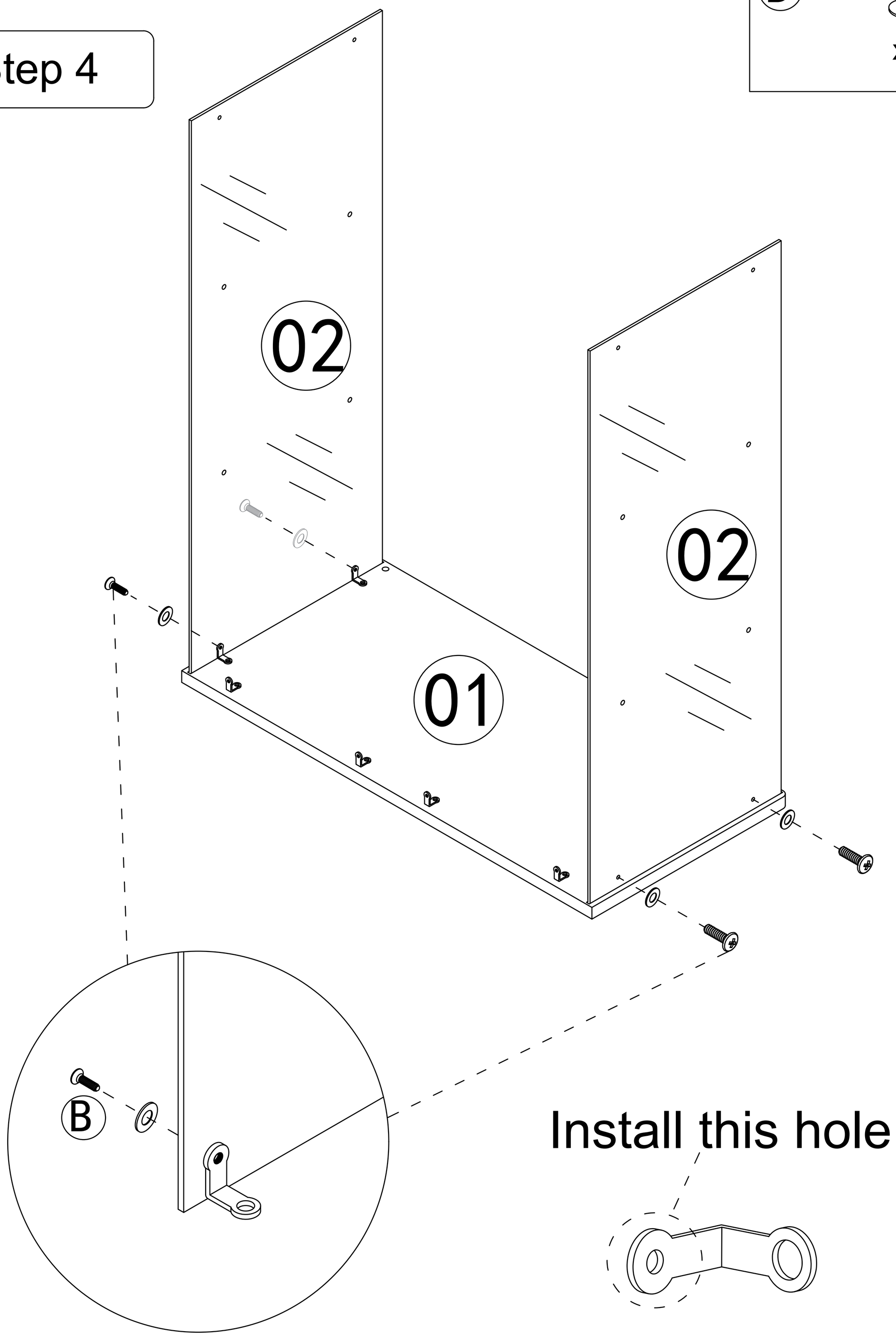

Please note: Do not use an electric drill when installing glass.

It is recommended to have two people assist with the installation.

Step 5

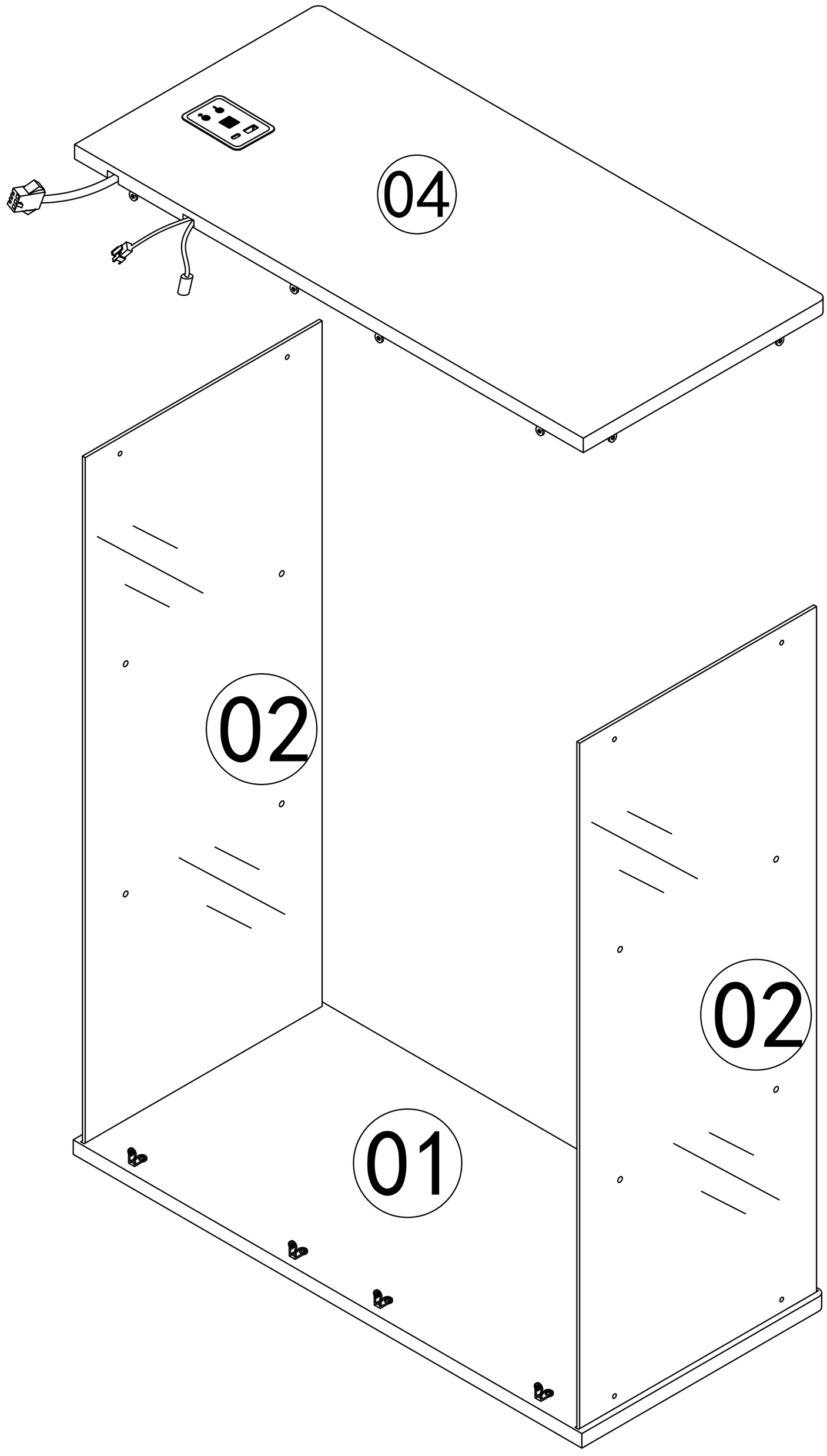

It is recommended to have two people assist with the installation.

Step 6

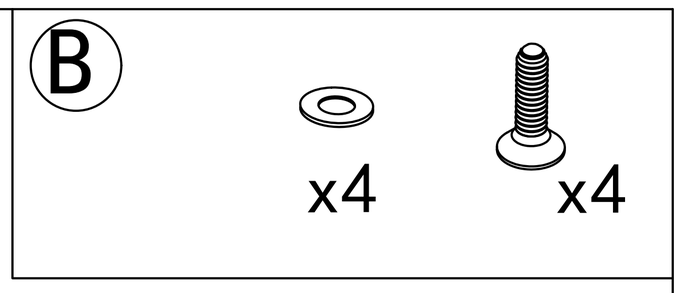

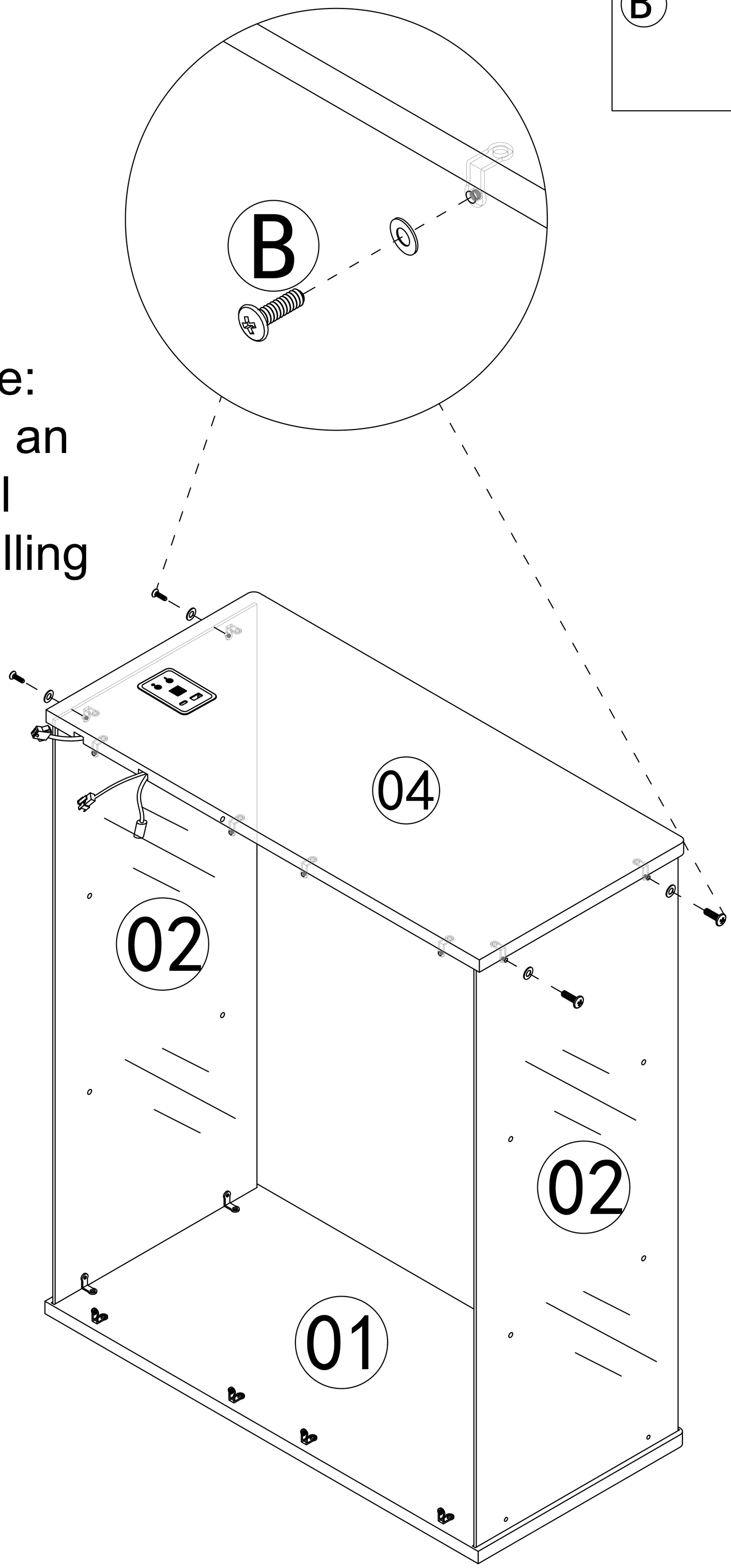

Please note:
Do not use an electric drill when installing glass.

It is recommended to have two people assist with the installation.

Step 7

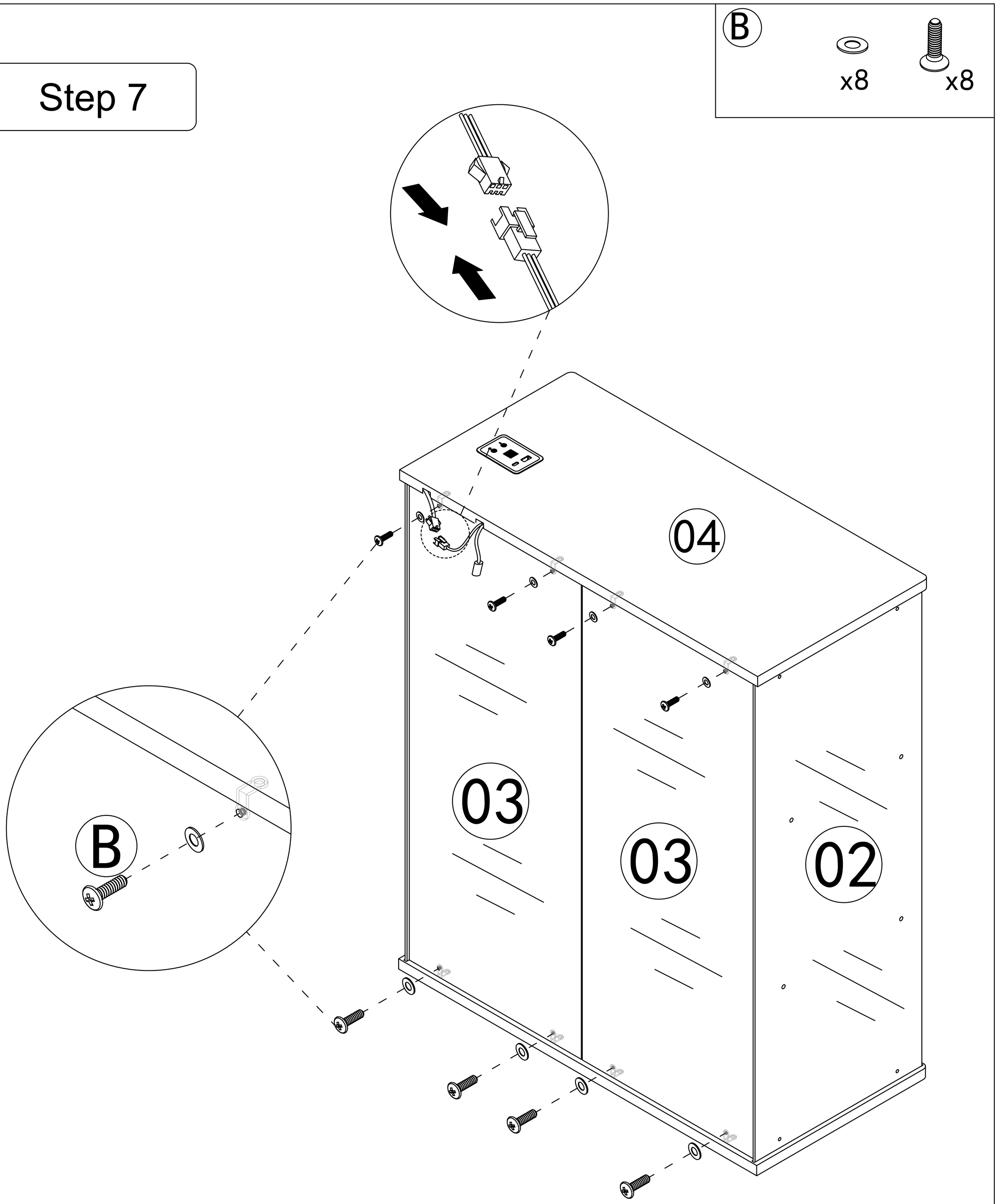

Please note: Do not use an electric drill when installing glass.

It is recommended to have two people assist with the installation.

Step 8

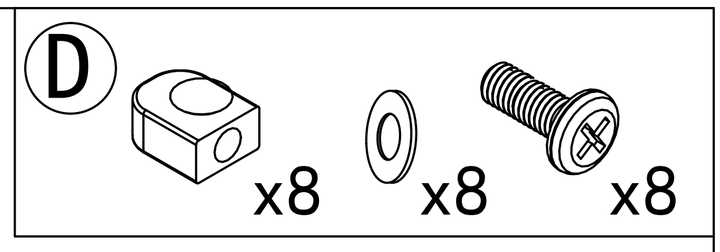

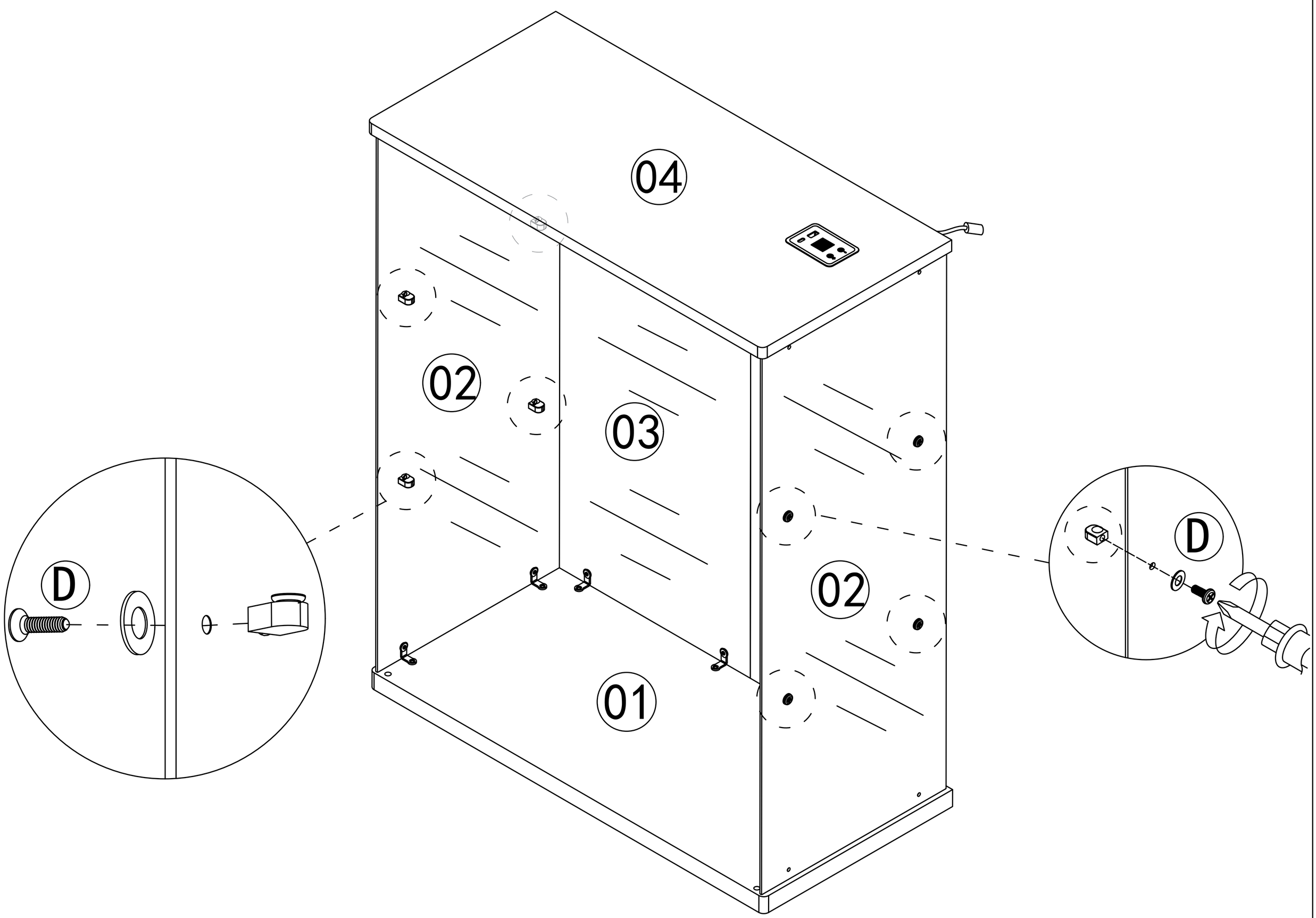

Please note: Do not use an electric drill.

Step 9

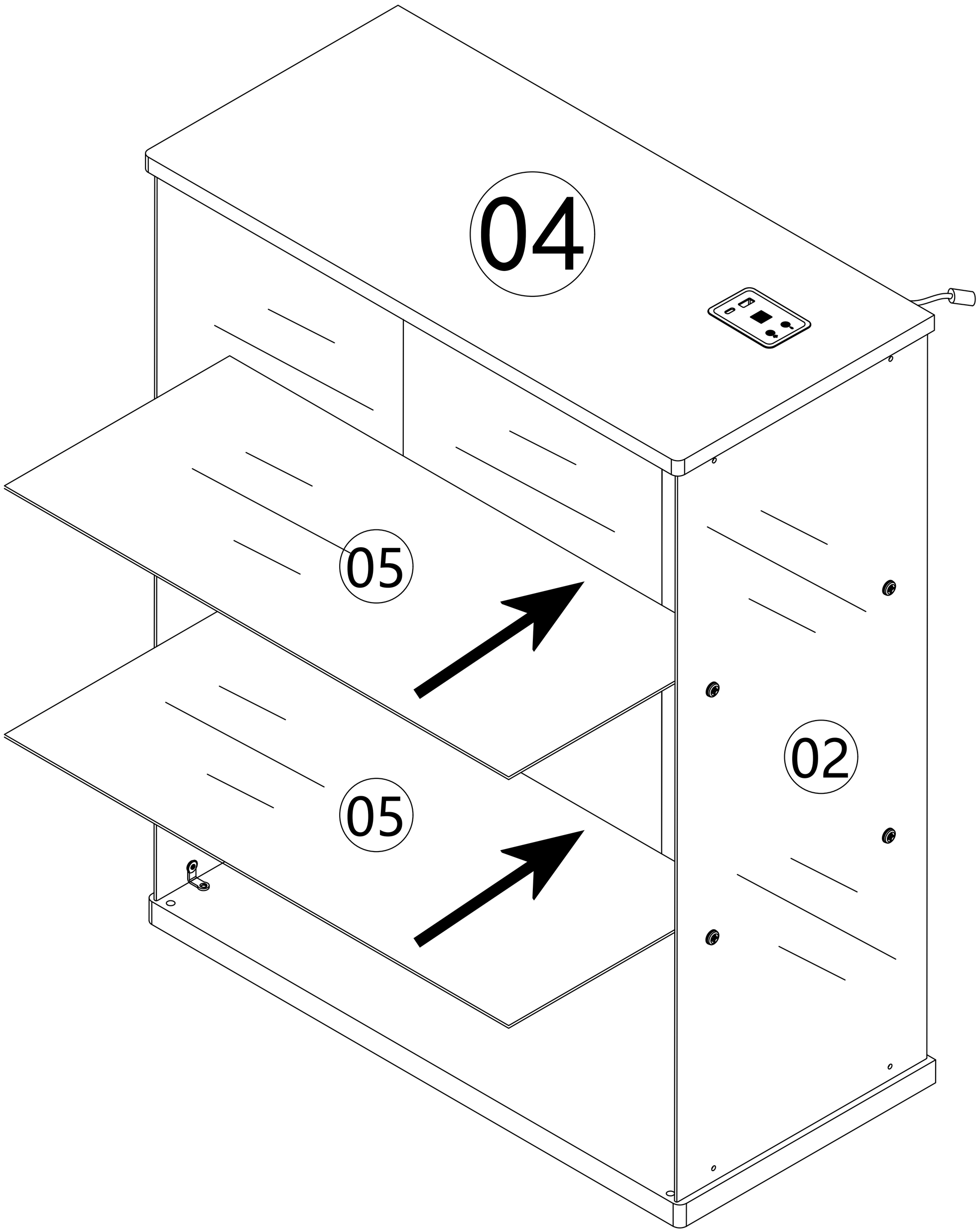

Step 10

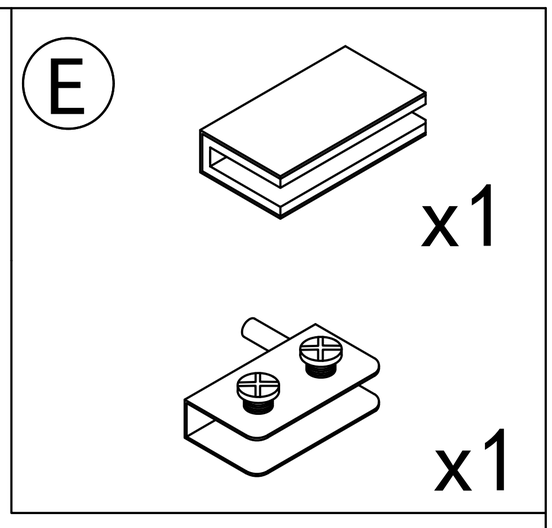

First, completely unscrew the screws on the parts

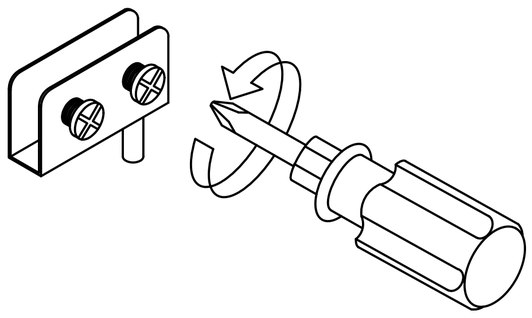

Place the white gasket first, then install the hinge, and finally tighten the screws.

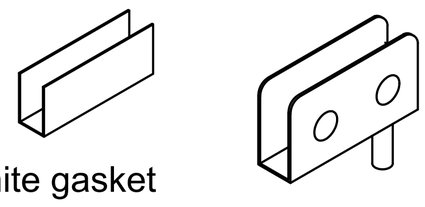

Pay attention to the direction of the door hinge, and rotate the screws to compress the white gasket

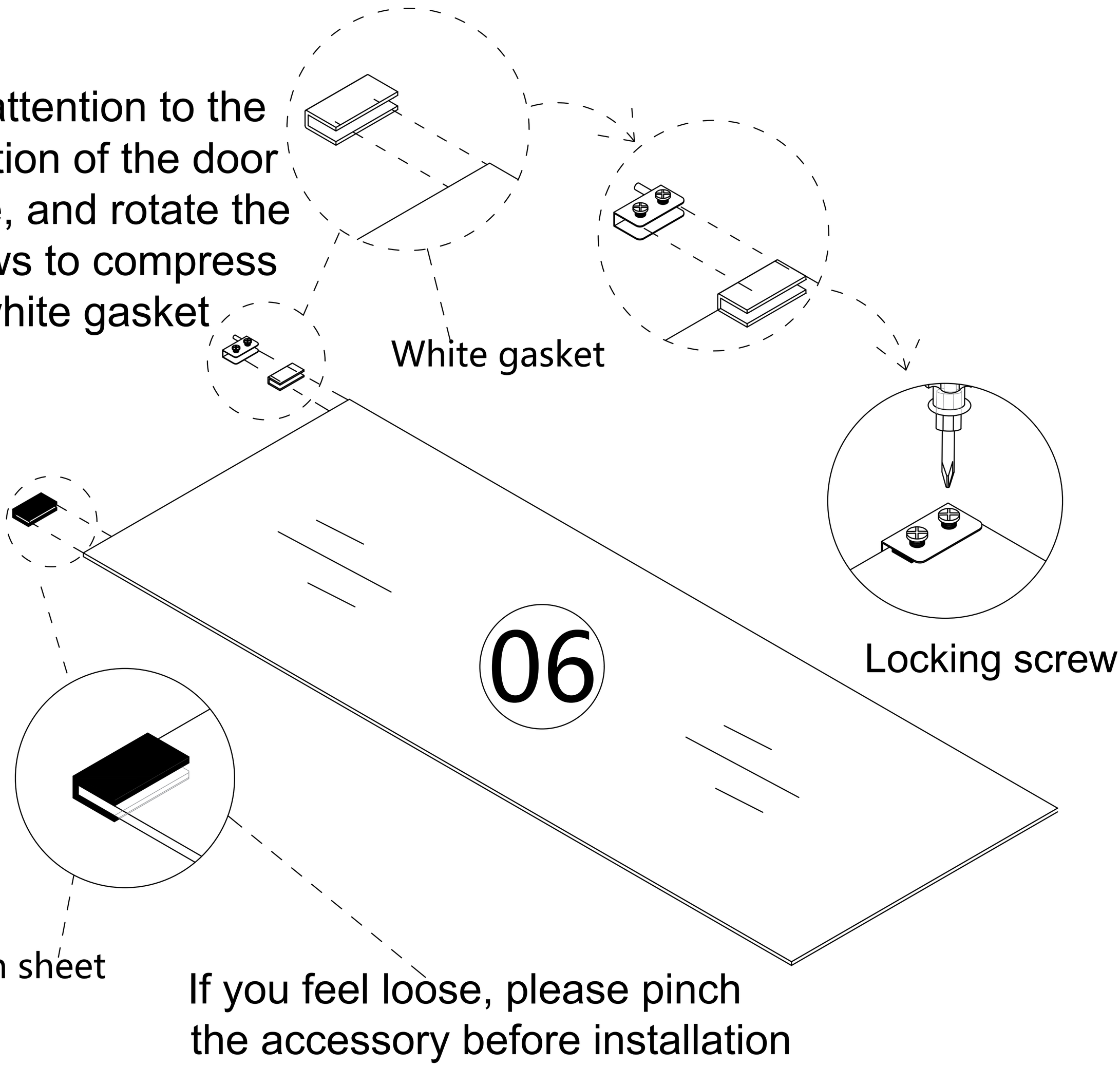

Please note: Do not use an electric drill.

Step 11

First, completely unscrew the screws on the parts

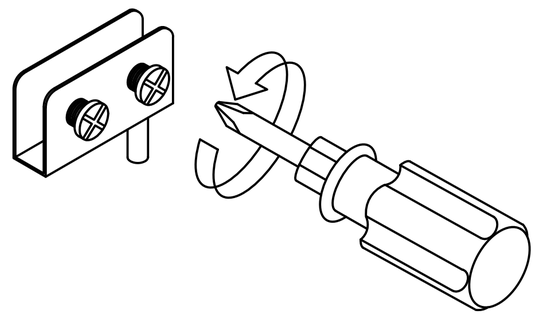

Place the white gasket first, then install the hinge, and finally tighten the screws.

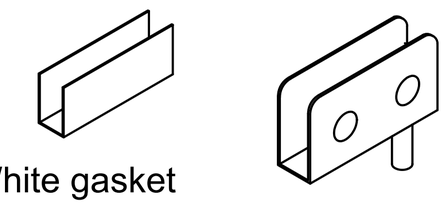

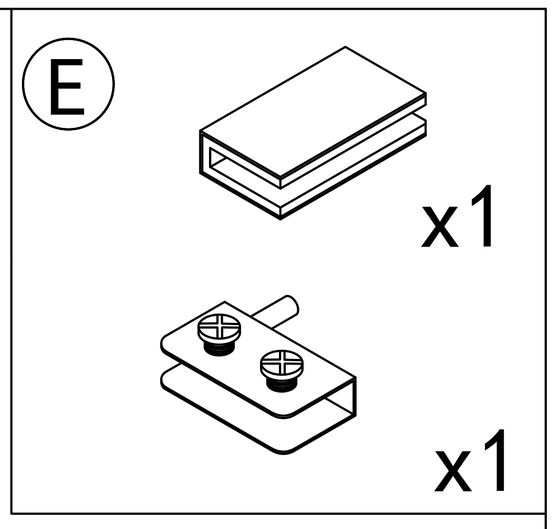

Pay attention to the direction of the door hinge, and rotate the screws to compress the white gasket

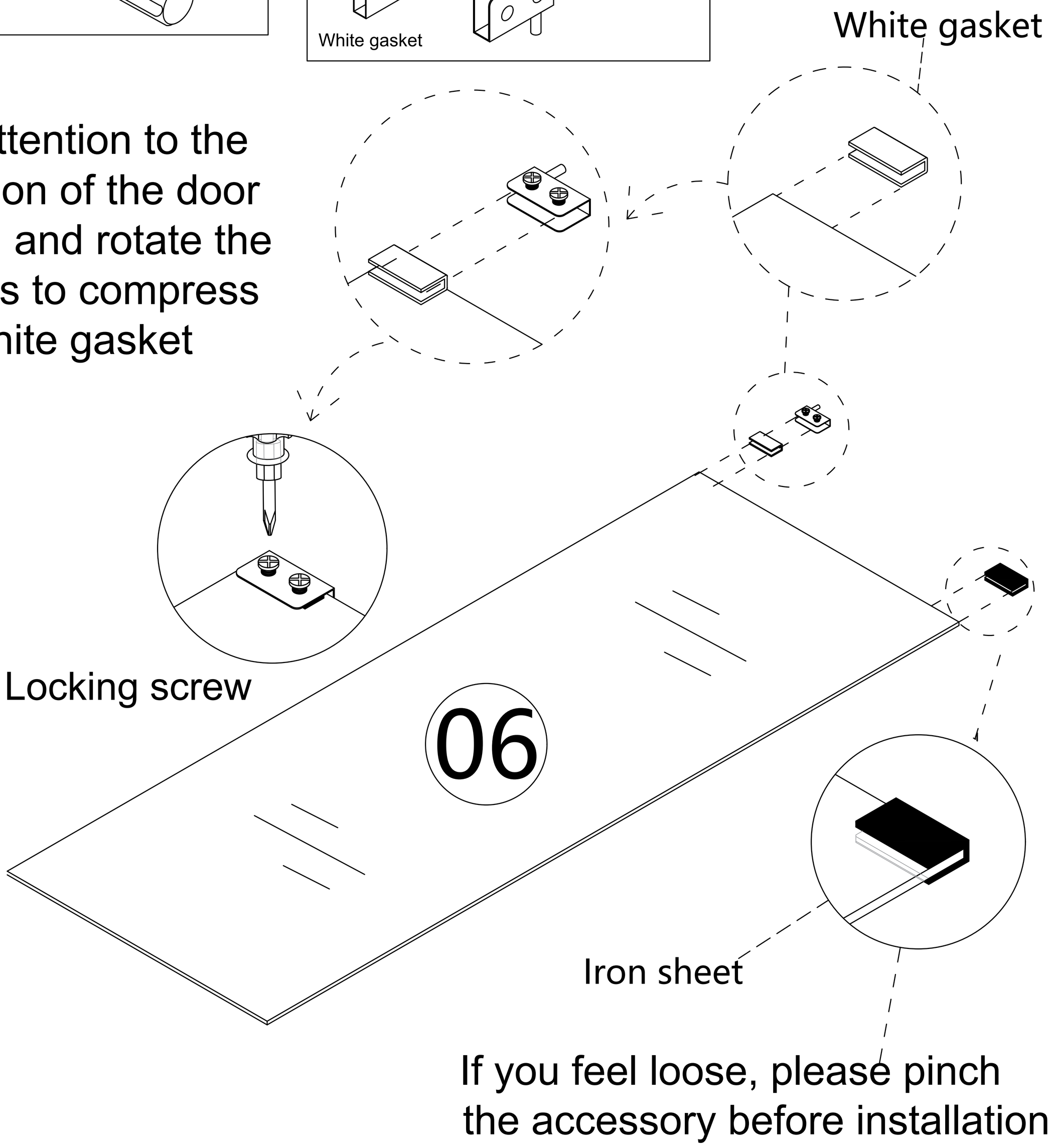

Please note: Do not use an electric drill.

Step 12

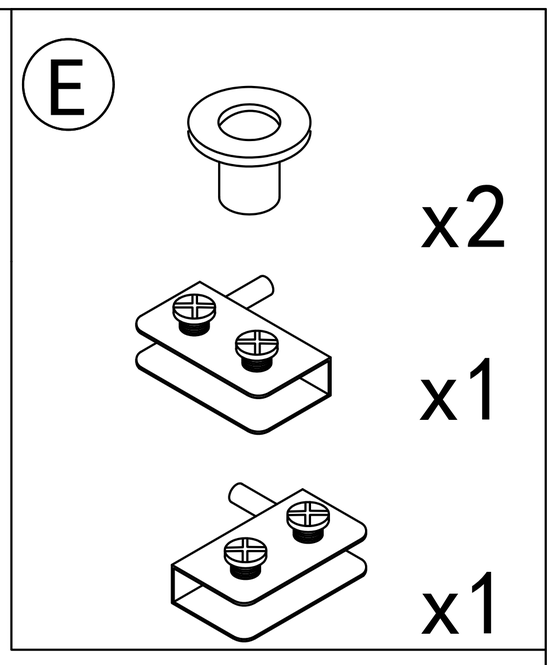

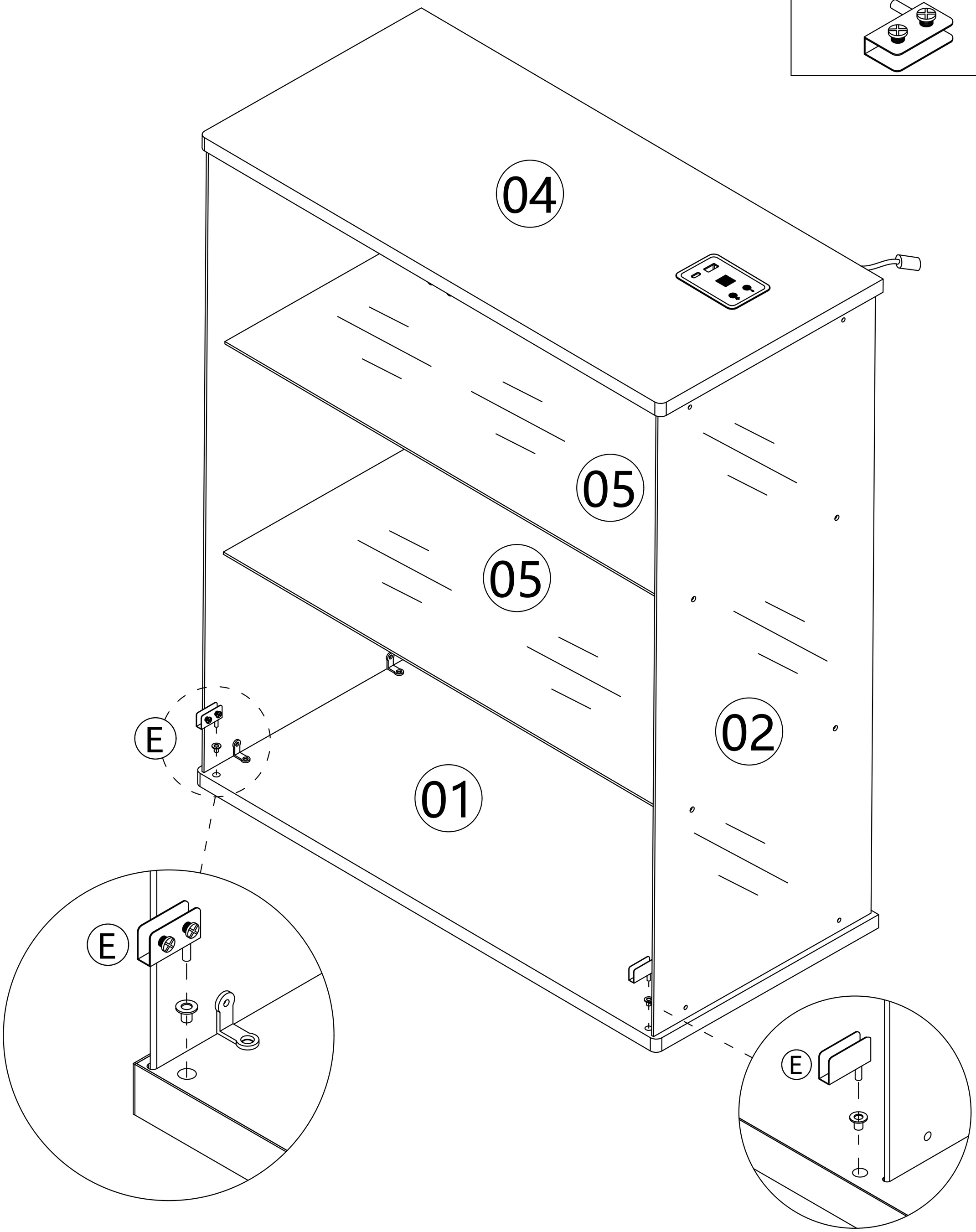

Step 13

Pay attention to the direction of the door hinge during installation

E

x2

When installing a glass door, it is recommended to have two people install it to avoid the glass door colliding or hitting oneself.

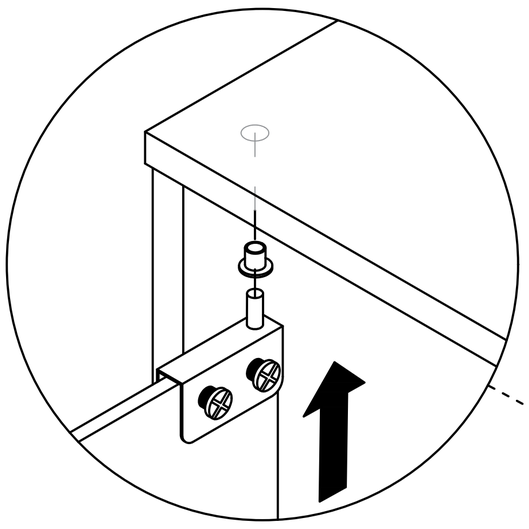

first

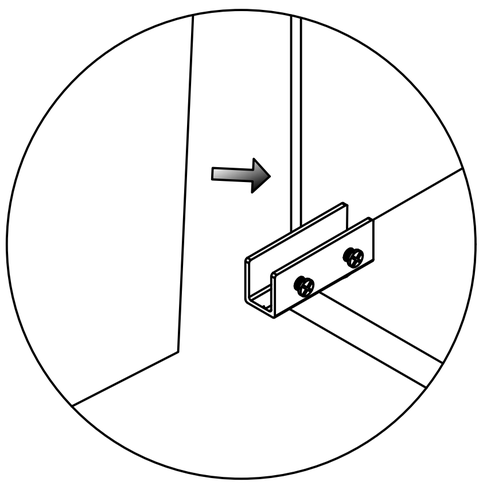

second

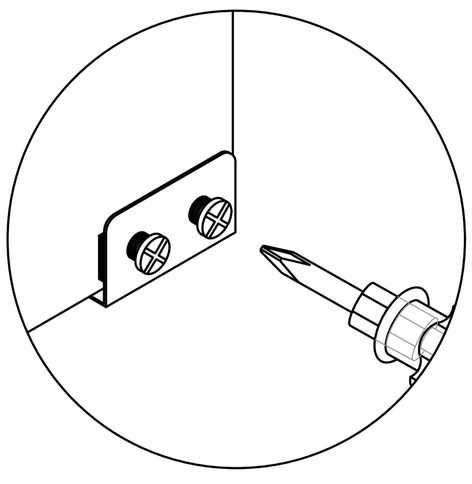

third

Locking screw

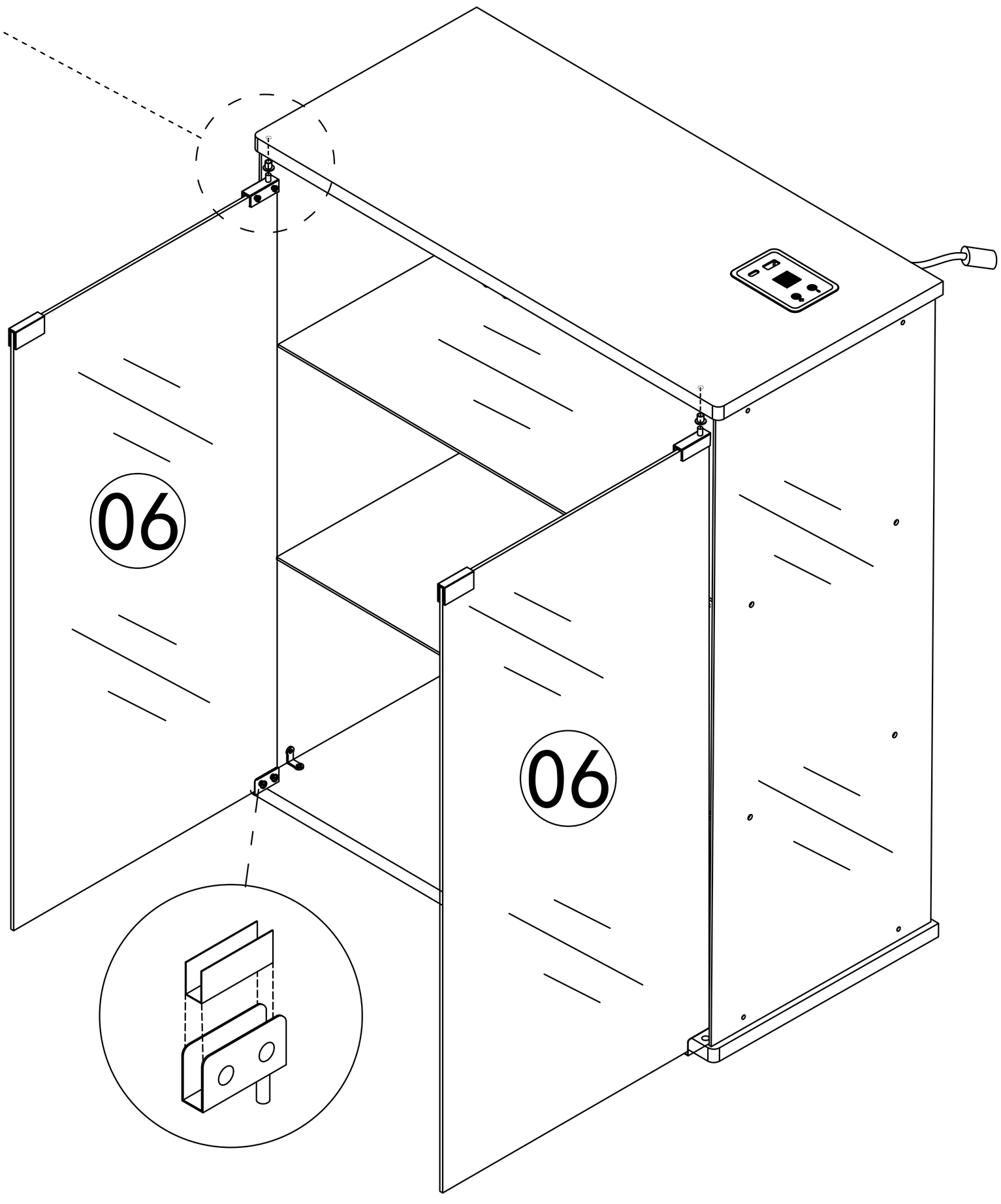

After aligning the glass door, tighten the screws to secure it.

Step 14

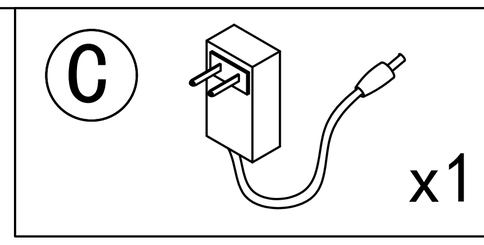

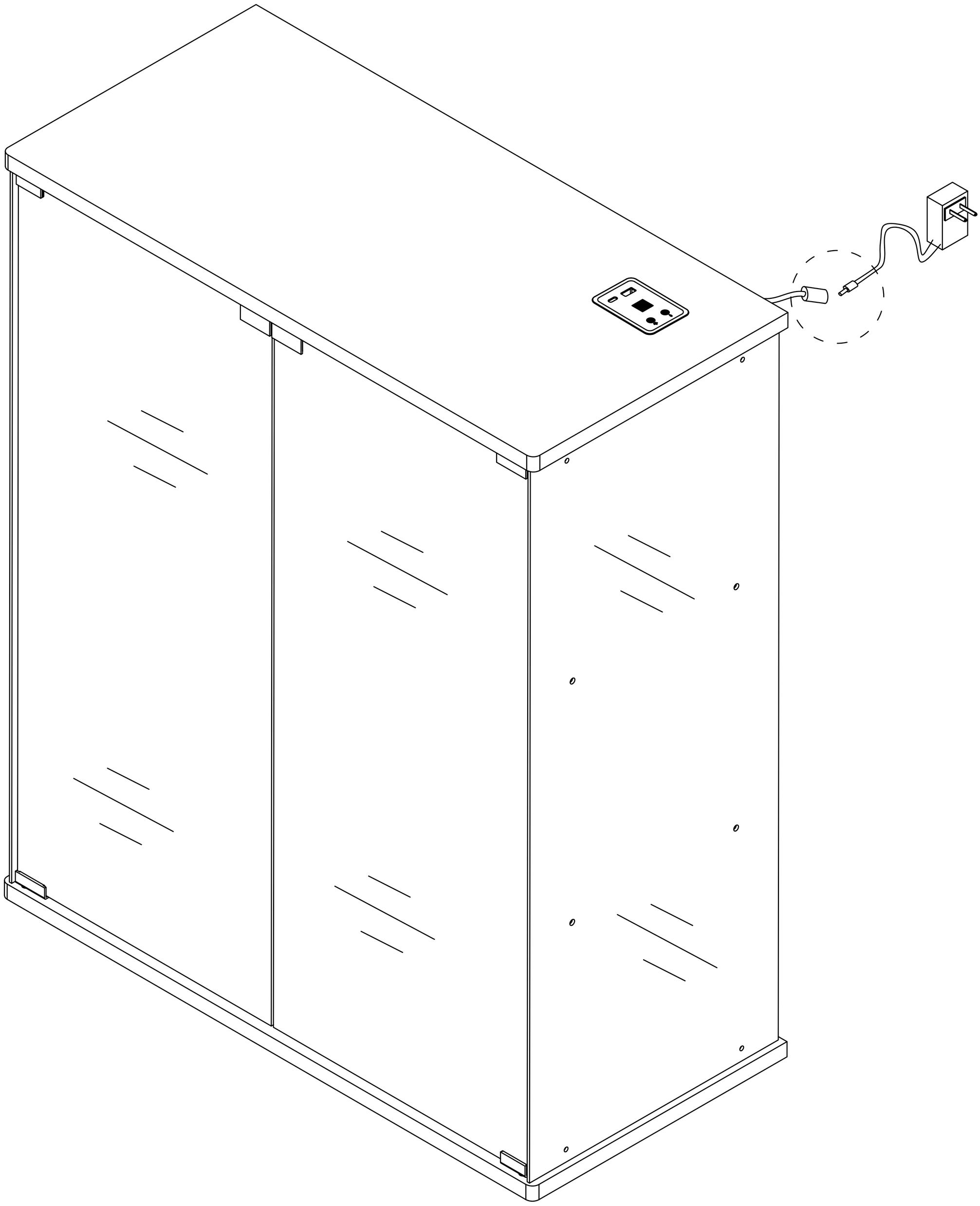

Step 15

Install as required

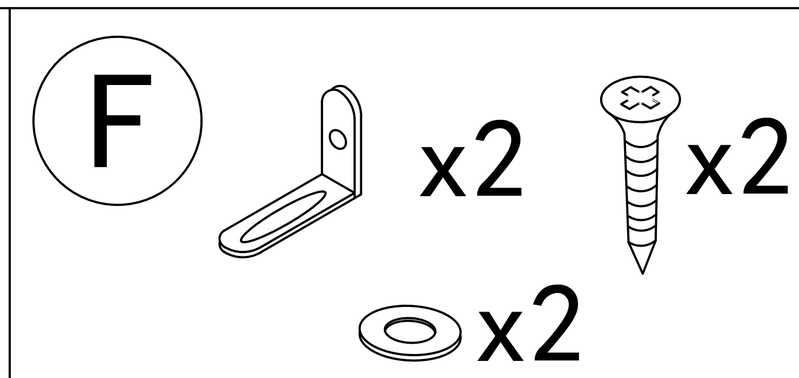

3.5x14mm

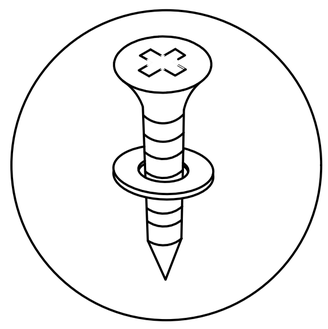

Install the anti fall hardware on the cabinet as shown in the picture first

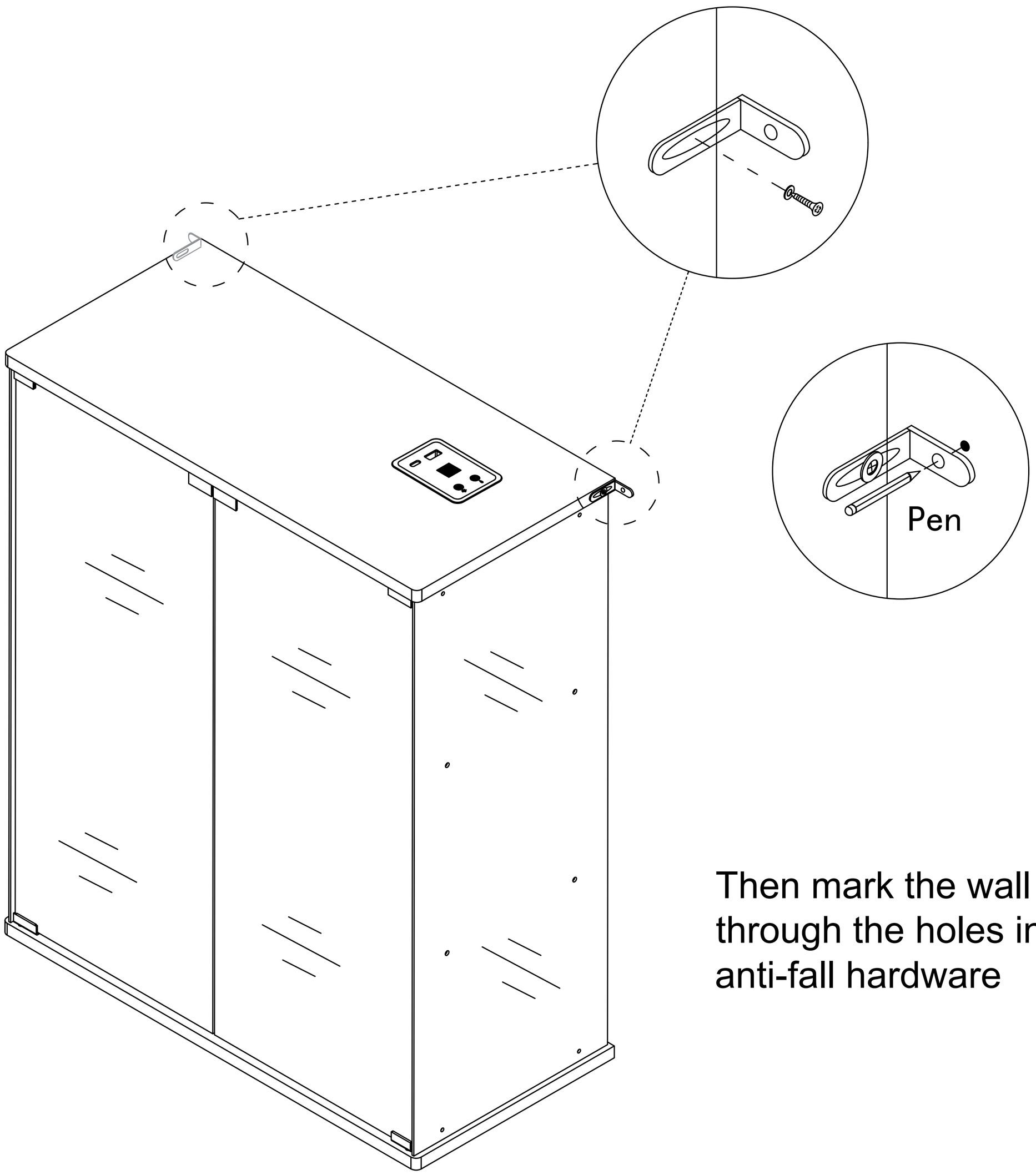

Then mark the wall with a pen through the holes in the anti-fall hardware

Step 16

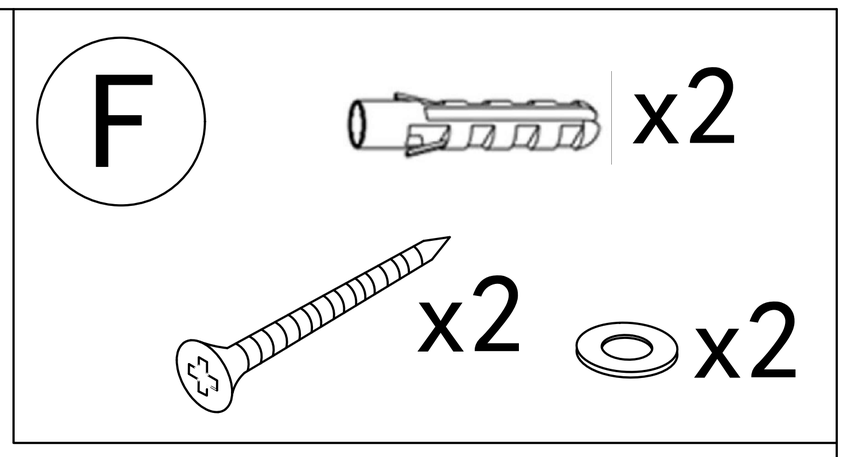

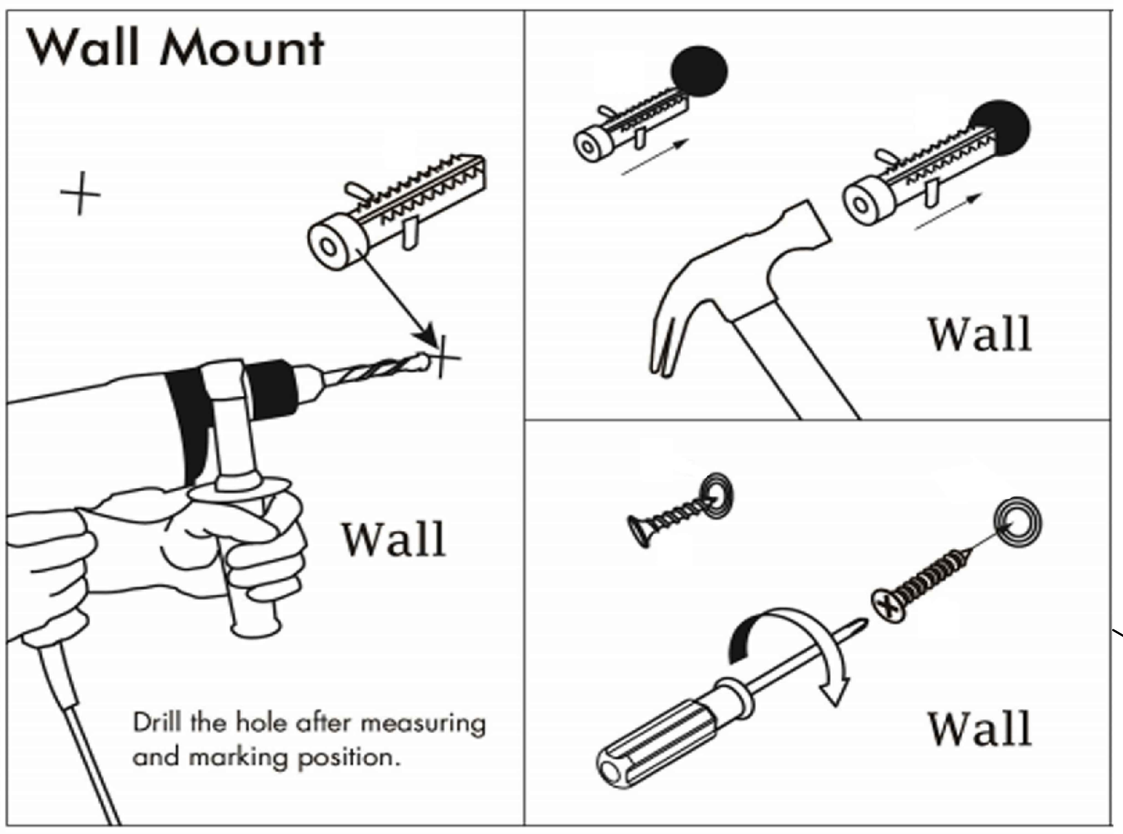

Drill the hole with an electric drill and punch in the colloidal particles

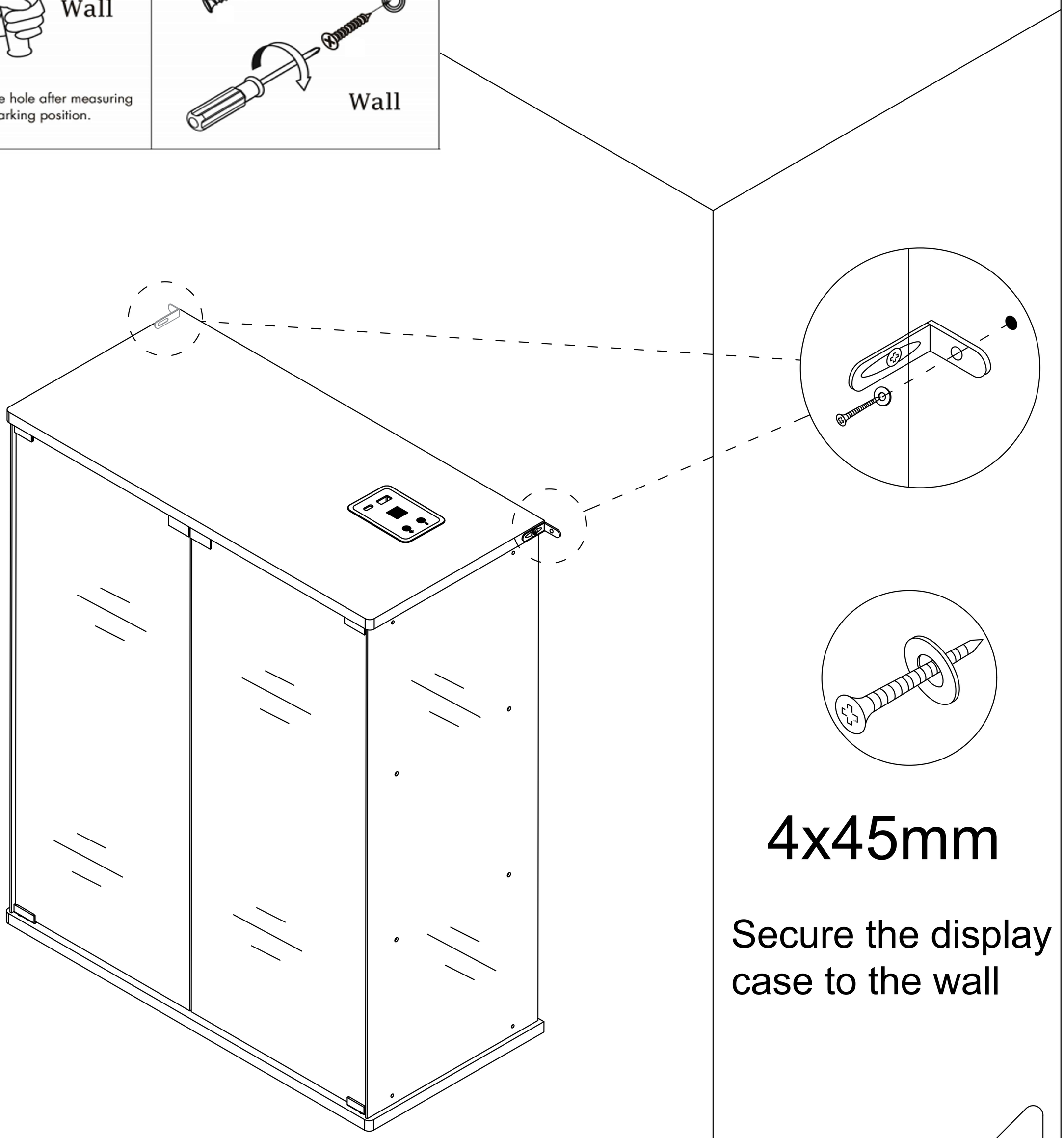

Secure the display case to the wall

Scan code to download app

User's Guide

A32

Thank you for purchasing this product.

To use this product, please connect it to a power source.

Please use if the product works normally after connecting to power.

If bubbles appear on the panel, remove the protective film.

Introduction

The box is an intelligent controller.

It has 1 USB output port 1 Type-c port, with 2 touch buttons ,

it can and turn ON/OFF the induction function,

turn ON/OFF the light,adjust the light luminance, and change light colors.

The lights can be controlled through both the touch buttons and a dedicated app.

Operation

This touch button is used to turn the light on/off, adjust brightness, and switch the color of the lights.

i. Single Click: Turn the light on/off.

ii. Quick Double-Click: Switch between 7 static RGB colors.

iii. Long Press (2+ seconds): Adjust the light luminance.

This touch button is used to switch dynamic phantom colors and turn ON/OFF the induction function.

i. Single Click:Switch to Phantom Mode, with 5 magical color transformations available.

ii. Human Body Sensing Control:Long Press (3+ seconds): Turn on The key press indicator light is on.)

Long Press (3+ seconds): Turn off （The key press indicator light is off.）

By default, the human body sensing is enabled upon initial power-on, and the indicator light is on.

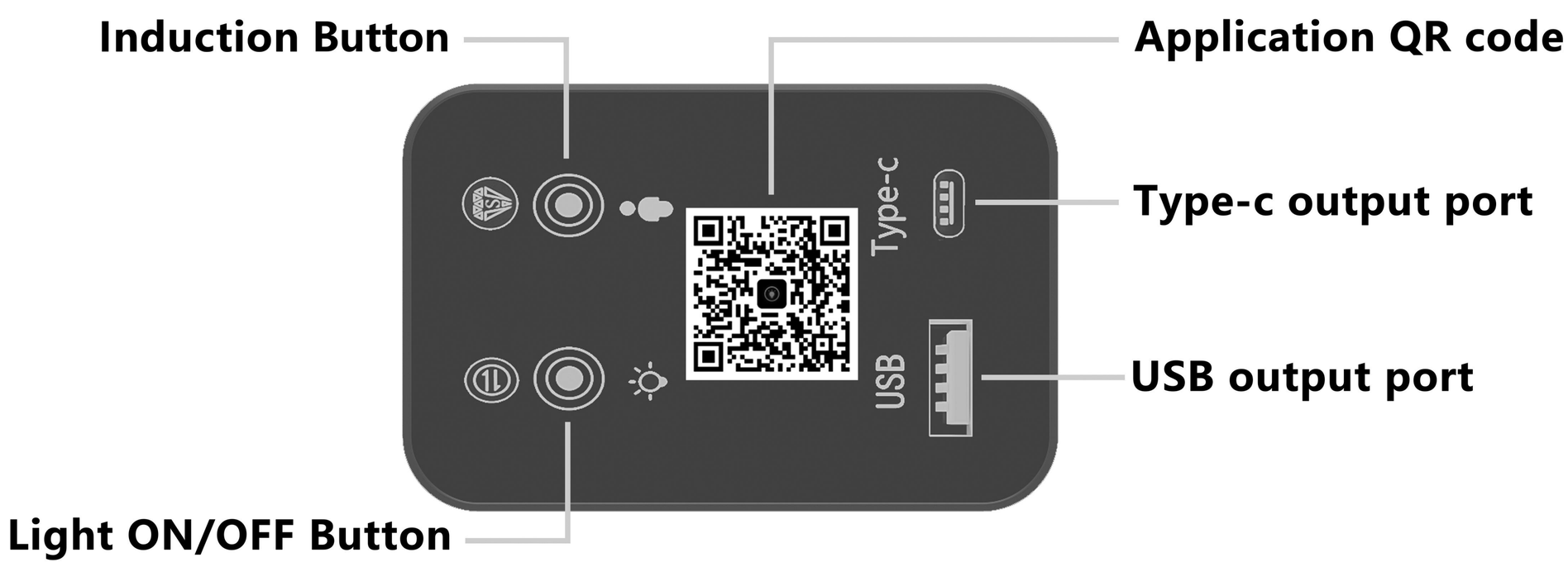

⚠ ATTENTION PLEASE

1. If there is no touch response suddenly, Re-plug the power to reset the touch static electricity.

2. If you have any questions when installing, please feel free to contact us. Thank you.

Smart Box Plug Power Off

Scan the QR code to download the app

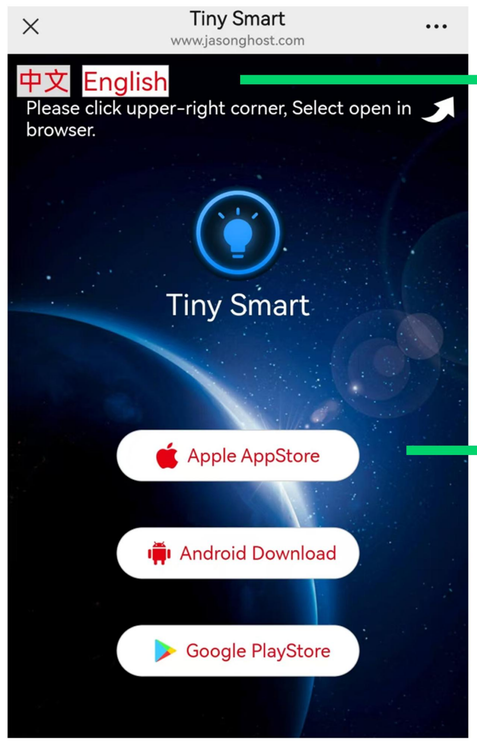

Select English Language

Select the corresponding device to download.

Note: If the download fails,

please turn off the "Enhanced Protection"

in the Pure Mode settings of the device.

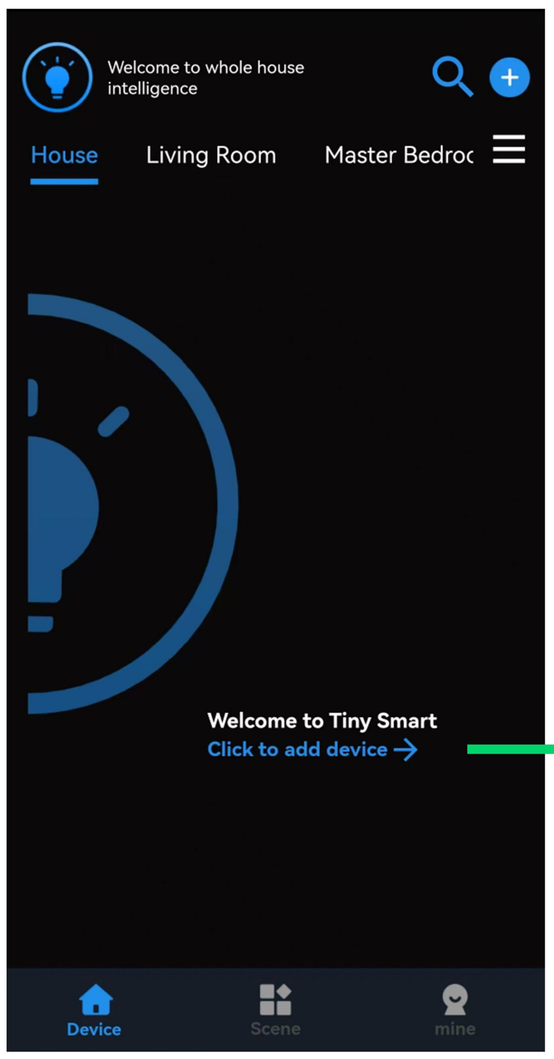

①

②

It turns blue after clicking

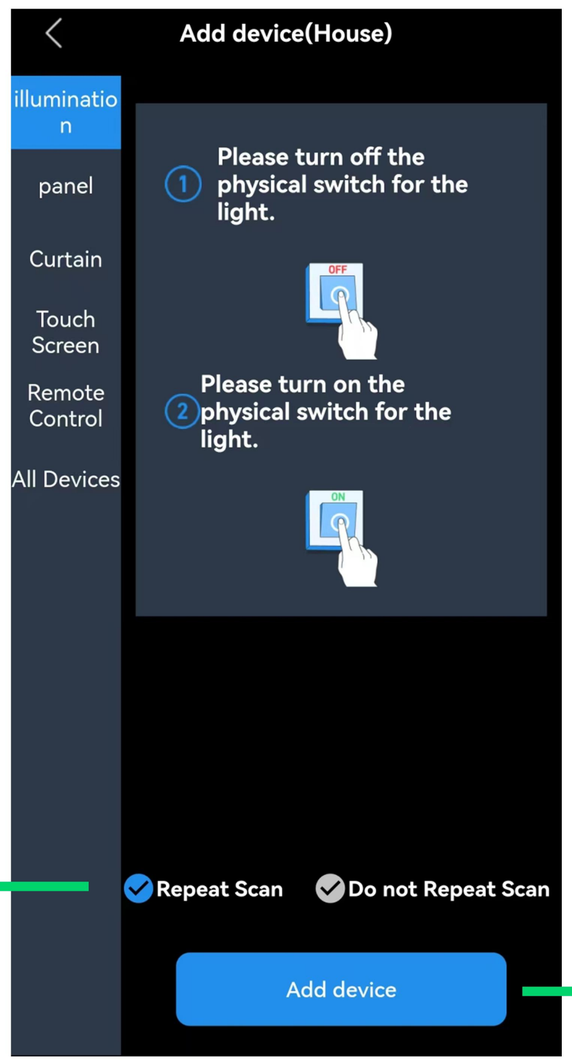

③

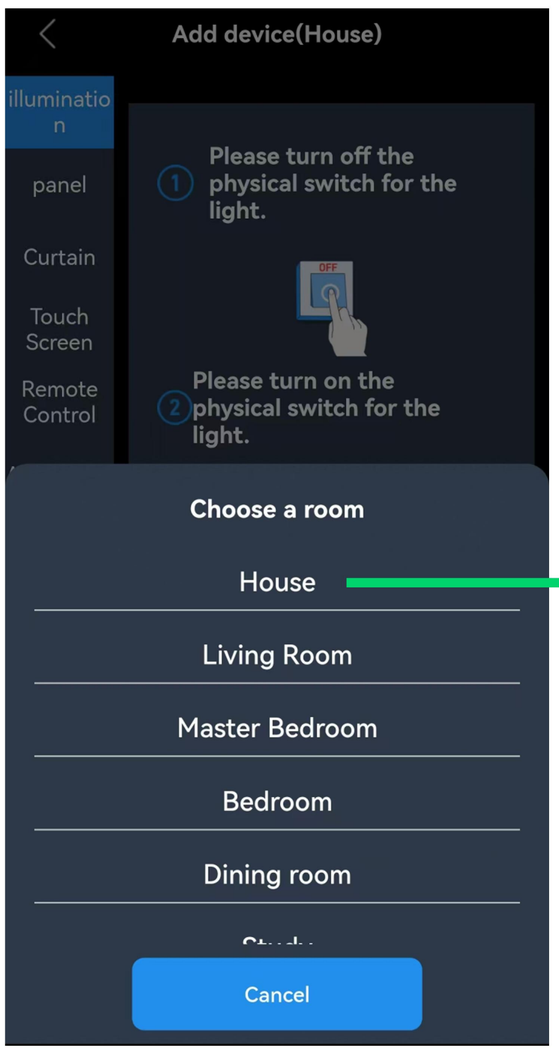

④

⑤ Unplug the smart box

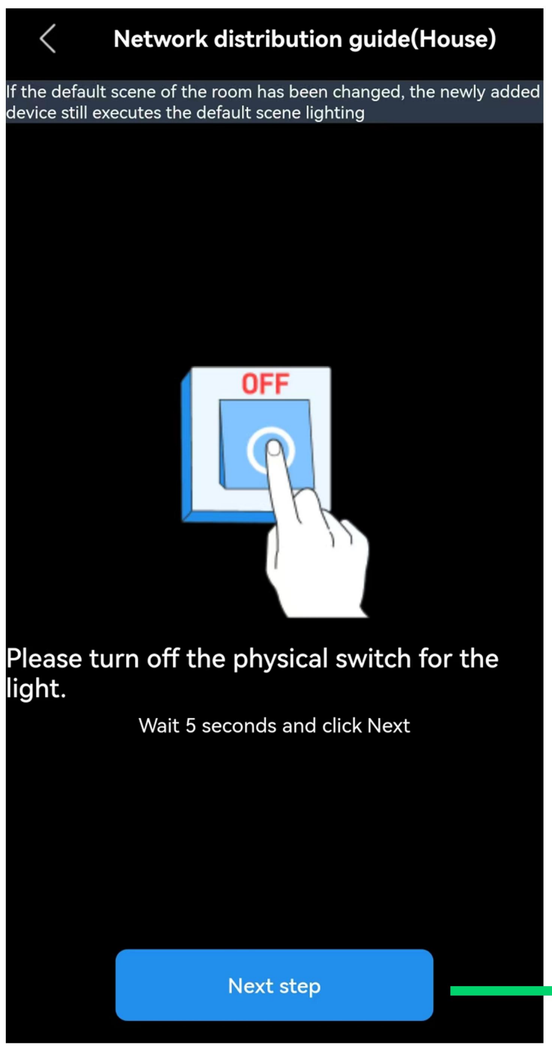

⑥

⑦Plug in the smart box power plug.

The appearance of this program icon indicates that the matching is complete

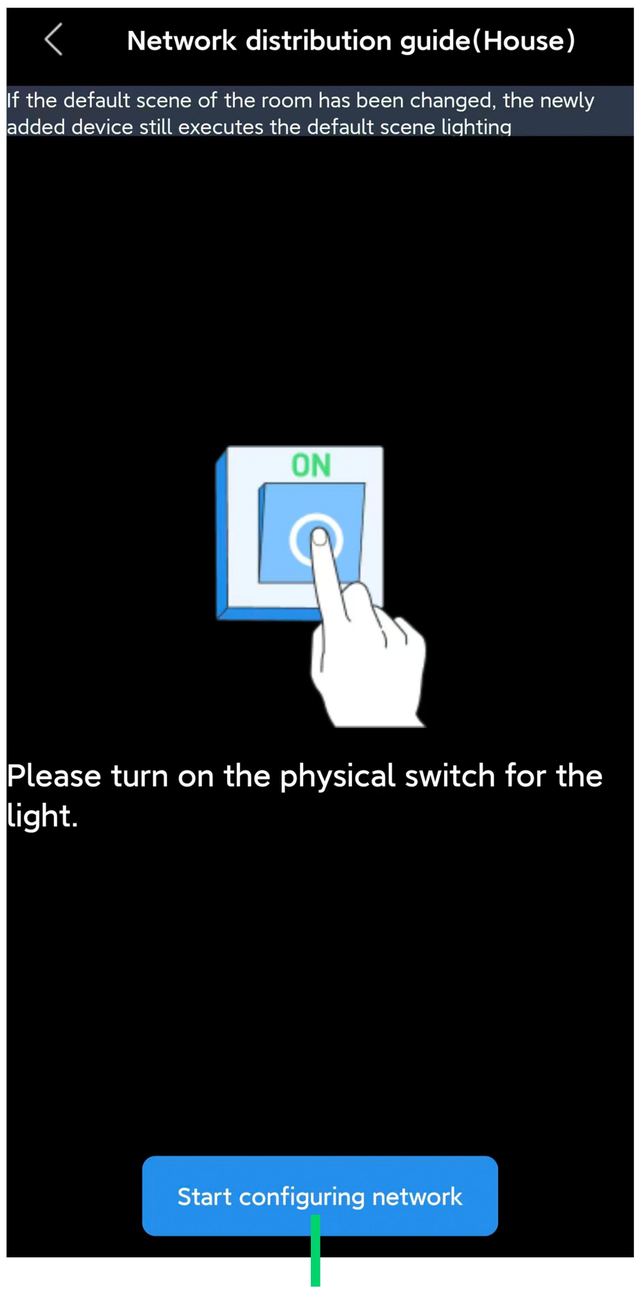

⑧

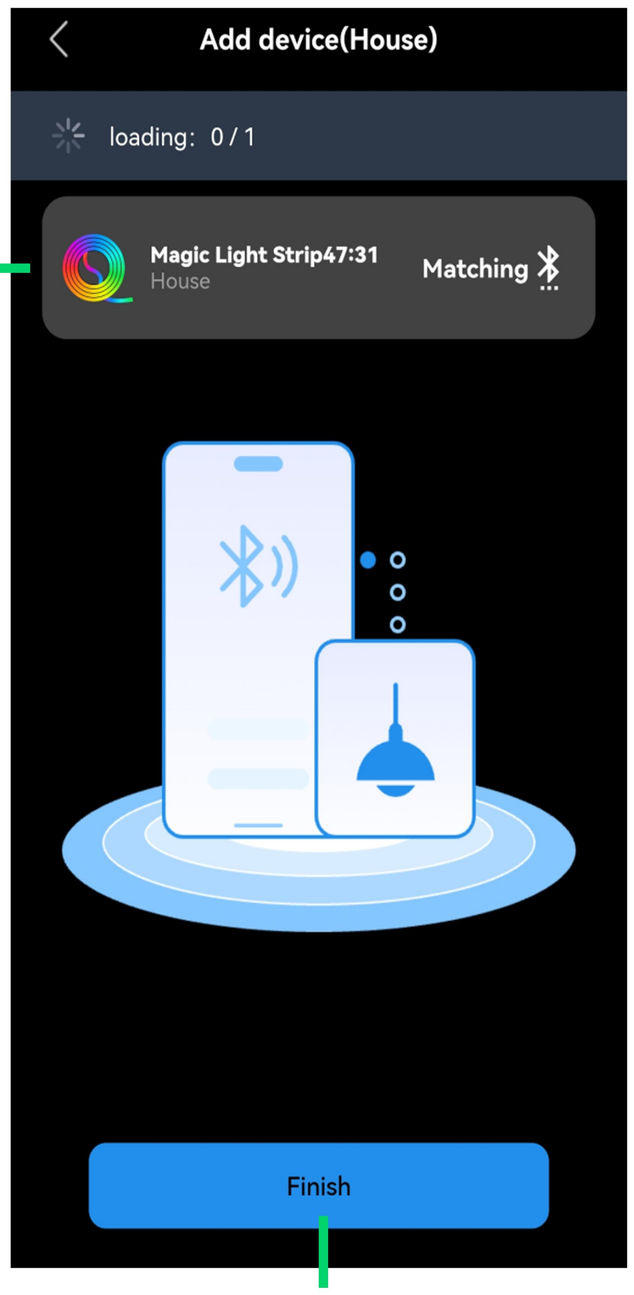

⑨

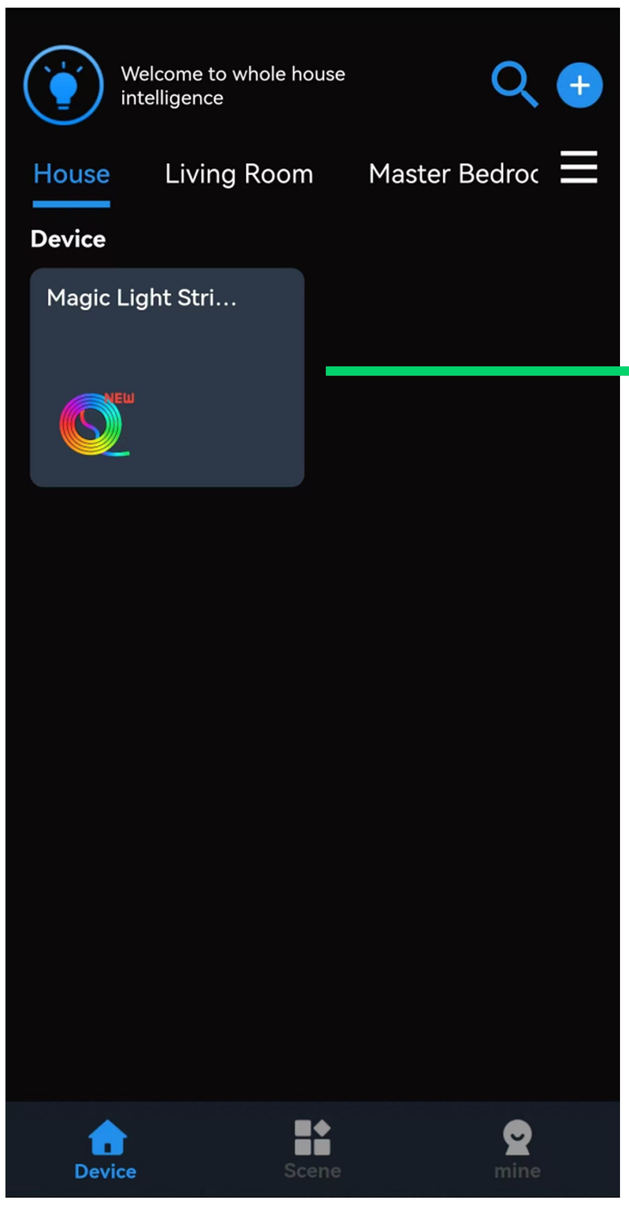

⑩

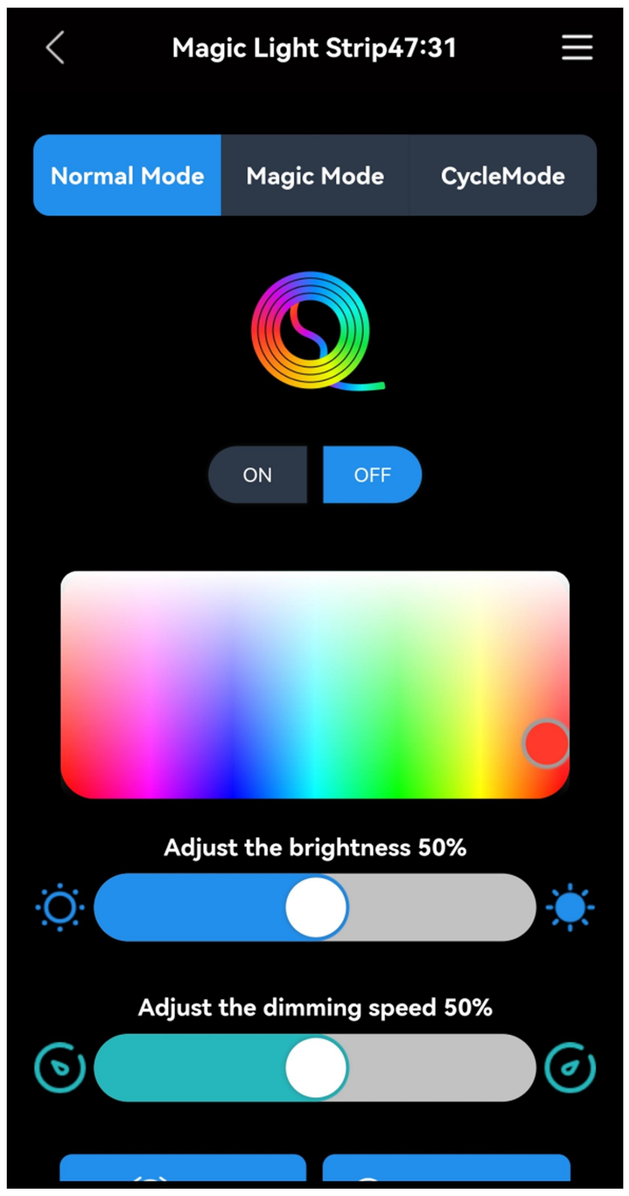

Now you can freely adjust the lighting according to your preferences